BOARD REPORT **NO**. 23-202

DATE December 07, 2023 C.D. 4

BOARD OF RECREATION AND PARK COMMISSIONERS

SUBJECT: STUDIO CITY RECREATION CENTER – NEW GYMNASIUM (RE-BID) PROJECT (PRJ20404) (W.O. #E170267B) – AUTHORITY TO RE-BID; APPROVAL OF FINAL PLANS AND CALL FOR BIDS

B. Aguirre		M. Rudnick	
B. Jones		for * C. Santo Domingo	DF
B. Jackson		N. Williams	

General Manager

Approved Disapproved Withdrawn X

RECOMMENDATIONS

1. Approve final plans and specifications for the re-bid documents, substantially in the form on file with the Board of Recreation and Park Commissioners (Board) Office and as attached to this Report, for the Studio City Recreation Center – New Gymnasium (Re-bid) (PRJ20404) (W.O #E170267B) project (Project);

2. Approve the Project to be re-bid;

3. Approve the date to be advertised for receipt of bids as February 5, 2024 at 2:00 P.M. in the Board Office; and,

4. Authorize the Department of Recreation and Park's Chief Accounting Employee or Designee to make technical corrections as necessary to carry out the intent of this Report.

SUMMARY

The Studio City Recreation Center (locally known as Beeman Park) is an 8.46-acre neighborhood park located at 12621 West Rye Street, Studio City, in Los Angeles. The existing amenities include an auditorium/small gymnasium, lighted baseball diamond, basketball courts, tennis courts, children's play area, barbecue pits, picnic tables, and outdoor fitness equipment. The facility also provides various community programs and classes, including a youth baseball program that is considered the second largest program offered in public parks.

The Project is a Proposition K – L.A. for Kids Program (Prop K) Specified Project. The scope of work includes the demolition of the existing 5,723-square-foot community building and construction of a new gymnasium and community center, totaling 12,000 square feet, to provide

the much-needed space for the Department's essential programs and classes serving the community. Site improvements include new hardscape areas to provide circulation and gathering spaces, improvements to the surrounding landscape through turf and irrigation repairs, and new trees and shade. The Project is targeting both Leadership in Energy and Environmental Design (LEED) and Living Future Institute Net Zero Building (NetZero) certifications.

Three (3) Local Volunteer Neighborhood Oversight Committee (LVNOC) meetings were held to provide opportunities for stakeholders and community members to engage in the development and design of the proposed Project. In the summer of 2019, five (5) additional community outreach meetings were also conducted as part of the community outreach requirements for the State's Proposition 68 funding.

On December 18, 2019, the Board approved the final plans and call for bids for the Project (Attachment No. 2). The plans and specifications were prepared by the Department of Public Works, Bureau of Engineering (BOE), Architectural Division, with supporting design service provided by Sparano + Mooney Architectural, Inc. Since then, the plans have been updated to reflect personnel changes (Attachment No. 1).

On March 18, 2020, two (2) bids were received from A&B Construction, Inc. and M.S Construction Management Group. The bid amounts received are listed in the following table:

No.	**Contractor**	**Base Bid**
1	A & B Construction, Inc.	$13,765,000
2	M.S. Construction Management Group	$12,995,000

After a thorough evaluation, both bids submitted by A & B Construction, Inc. and M.S. Construction Management Group were deemed non-responsive due to non-compliance with the City's Business Inclusion Program (BIP), resulting in the need to re-bid this Project. On July 16, 2020, the Board rejected all bids received on March 18, 2020 (Attachment No. 3).

Project Title Clarification

Certain bid documents may reference the project title as Studio City Gym, Studio City Recreation Center, and/or Studio City Recreation Center Gymnasium, and shall be considered part of the bid package for the project titled Studio City Recreation Center - New Gymnasium.

PROJECT FUNDING

The project budget and construction cost have been adjusted due to impact of the pandemic and construction material inflation and other factors. Based on the base bids received and uprising construction market, staff adjusted the City Engineer's estimate for the Project's construction cost to Twenty Million, Six Hundred Eight-Four Thousand Dollars ($20,684,000).

This estimate was confirmed by a recent independent estimate and including the following Bid Additive Alternate.

Bid Additive Alternate
Due to the saturated construction market, its impact on the bidding environment of public projects, and limited availability of funds, one Additive Alternate has been identified in this re-bid effort.

Additive Alternate:
Provide a design-built fully engineered and permitted photovoltaic (PV) systems with all the components for a complete and fully operable PV system, comply with CEC 2016, ART 690. Basic components are listed in the project specification.

The determination of the lowest bidder will be made on the basis of the Base Bid amount including the Additive Alternate. The City Engineer's estimate for the Bid Alternate is $500,000. The Additive Alternate bid item may be awarded as part of the contract at the discretion of the Board at the time of award, should funding become available.

Funds are currently available from the following funds and account:

Available Funding Sources	**Dept/ Fund/ Appro. Unit**	**Amount**
Prop K 18	43K/L479	$2,841,868.02
Prop K 19	43K/MPCV	$1,000,000
Prop K 27	TBD	$800,000
Prop K 28	TBD	$800,000
Quimby	302/460K	$911,767
MICLA (FY 2021-22) CF 21-600	TBD	$7,000,000
MICLA (FY 2022-23) CF 22-600	TBD	$3,390,000
HUD/CPF[1] (FY 2023)	TBD	$3,000,000
MICLA (FY 2023-24) CF 23-600	TBD	$5,775,000
Current Total Available Funding		**$25,518,635.02**

[1] The "Community Project Funding" or "CPF" awards are administered by the Department of Housing and Urban Development (HUD). The award letter for the Grant Number B-23-CP-CA-0216 is attached as Attachment No.4.

TREES AND SHADE

Eleven (11) trees are proposed to be removed and sixty-three (63) trees are proposed to be planted as part of this Project.

The existing trees proposed to be removed are: four (4) Velvet Ash, two (2) Crape Myrtle, two (2) Southern Magnolia, one (1) Benjamin Fig, one (1) Brisbane Box, and one (1) Holly Oak, which are non-native unprotected trees per definition of Protected Tree under Ordinance No. 177404. Their total diameter at breast height (DBH) is 151".

The new trees proposed to be planted are: eight (8) African Fern Pine, fourteen (14) Desert Willow, eight (8) Australian Willow, nine (9) Eldarica Pine, fourteen (14) Red Push Pistache, two (2) Coast Live Oak, and eight (8) Tipuana.

All new trees proposed to be planted are 36-inch box trees and have a projected five (5) year canopy diameter of sixteen (16) feet to twenty (20) feet. Their total DBH will be 189". Approximately four thousand three hundred (4,300) square feet of tree canopy is proposed to be removed, and approximately twelve thousand (12,000) square feet of tree canopy is projected to be provided by the new trees after five (5) years, assuming a survival rate of 75%.

ENVIRONMENTAL IMPACT

The proposed Project consists of the demolition of the existing recreation center building and the construction of a new modern gymnasium with a high-school size basketball court, multipurpose rooms, staff offices, kitchen, restrooms and support facilities, as well as security lighting, parking lot, landscaping and irrigation.

The Project is also subject to review under the National Environmental Policy Act (NEPA) and will comply with HUD's NEPA-implementing regulations at 24 CFR Part 58 because it is the recipient of a Federal Community Project Funding (CPF) grant (Attachment 4). The BOE Environmental Management Group (EMG) conducted an environmental review under NEPA guidelines for the Project. On July 27, 2023, a *Studio City Recreation Center 12621 Rye St. Studio City, CA 91604 - Conditional Environmental Clearance Memo* from Maria Martin to Shun Yu Zhang (Attachment 06) was issued to guarantee that all conditions required will be performed. The review concluded that, following a number of "condition of approval" mitigations, the Project would not result in a significant impact on the human environment or to historical resources. These mitigation measures will be incorporated into project contracts and specifications to ensure full compliance with all applicable Federal and State environmental guidelines.

An Environmental Assessment under 24 CFR Part 58 was approved August 3, 2023, by Lyndon Salvador in his capacity as CIFD Assistant General Manager (AGM) as a designee for Abigail R. Marquez in her capacity as CIFD General Manager (GM). The Community Investment for Families Department (CIFD) has determined that the Project will have no significant impact on the human environment. Therefore, an Environmental Impact Statement under the National Environmental Policy Act of 1969 (NEPA) is not required. Additional Project information is contained in the Environmental Review Record (ERR).

A Finding of No Significant Impact and Notice of Intent To Request Release of Funds (FONSI/NOI-RROF) was posted Monday August 7, 2023, at the Project site and on the CIFD website as well as emailed to a comprehensive list of "interested parties." This allowed any individual, group, or agency to submit written comments on the ERR to CIFD. All comments received between August 7, 2023, and August 25, 2023, would have been considered by CIFD prior to authorizing submission of a request for release of funds; however, no comments were received. An Authority to Utilize Grant Funds (AUGF) was approved by HUD on September 14, 2023.

The Request for Release of Funds and Certification was approved by Veronica McDonnell in her capacity as CIFD Assistant General Manager (AGM) as a designee for Abigail R. Marquez in her capacity as CIFD General Manager (GM) on August 28, 2023. CIFD certified to HUD that the City shall enforce responsibilities in relation to the environmental review process of this Project. The Project has met the relevant eligibility requirements for the CPF Programs. HUD's approval of the certification satisfies its responsibilities under NEPA and related laws, and authorities, and allows CIFD to use Program funds. The ERR documentation supporting eligibility is on file and available to the public for review electronically at the City of Los Angeles, CIFD.

The Board of Recreation and Parks Commissioners approved the proposed Project on December 18, 2019 and determined that it is exempt from the provisions of CEQA. A Notice of Exemption (Attachment No. 5) was prepared on December 19, 2017 by the Environmental Management Group of BOE, and was filed by Department of Recreation and Parks (RAP) staff on October 16, 2019. The characteristics of the Project and of the environmental setting have not substantially changed since the date of approval. Therefore, RAP staff recommends that the Board take no further CEQA action.

FISCAL IMPACT

The Project will be funded by a combination of the aforementioned funding sources. There is no immediate fiscal impact to RAP's General Fund at this time. However, operations and maintenance costs will be evaluated and included in future RAP budget requests.

The City's Liability under the contract resulting from this bid process shall only extend to the present City appropriation to fund the contract. However, if the City appropriates funds for any succeeding years, the City's liability shall be extended to the extent of such appropriation, subject to the terms and conditions of the contract.

STRATEGIC PLAN INITIATIVES AND GOALS

Approval of this Board Report advances RAP's Strategic Plan by supporting:

Goal No. 3:	Create and Maintain World Class Parks and Facilities
Outcome No. 2:	Long-term park system planning is guided by community engagement, data, and a commitment to equity.

Key Metric: Complete capital improvement plan.
Result: The new gymnasium will satisfy the community's park needs and enhance the existing recreation programs.

This Report was prepared by Shun Yu Zhang, Project Manager, BOE Architectural Division, and reviewed by Ohaji Abdallah, Proposition K Program Manager, Steven Fierce, Division Head and Principal Architect, BOE Architectural Division; and Darryl Ford, Superintendent, Planning, Maintenance and Construction Branch.

LIST OF ATTACHMENTS/EXHIBITS

Attachment No. 1 – Final Plans and Specifications (Re-bid)
Attachment No. 2 – Board Report No. 19-257
Attachment No. 3 – Board Report No. 20-141
Attachment No. 4 – HUD Award Letter B-23-CP-CA-0216
Attachment No. 5 – Notice of Exemption
Attachment No. 6 – Conditional Environmental Clearance Memo

BUREAU OF ENGINEERING
DEPARTMENT OF PUBLIC WORKS
CITY OF LOS ANGELES

STUDIO CITY RECREATION CENTER

12621 RYE STREET, STUDIO CITY, CA 91604

BUREAU OF ENGINEERING
OFFICIAL RECORD

PROJECT TEAM

OWNER: **DEPARTMENT OF RECREATION AND PARKS**
JIMMY KIM
GENERAL MANAGER
221 NORTH FIGUEROA ST, SUITE 1550
LOS ANGELES, CA 90015

PROJECT MANAGEMENT: **ARCHITECTURAL DIVISION**
STEVEN FIERCE, A.I.A.
PRINCIPAL ARCHITECT
1149 S. BROADWAY, SUITE 830
LOS ANGELES, CA 90015
(213) 485-4000
FAX (213) 485-4836
CONTACT - SHUN YU ZHANG, P.E.
PROJECT MANAGER

CONSTRUCTION MANAGEMENT: **CONSTRUCTION MANAGEMENT GROUP**
RICHARD LOUIE, P.E. C.C.M.
DIVISION MANAGER
1149 S. BROADWAY, SUITE 800
LOS ANGELES, CA 90015

BID AND AWARD: **PROJECT AWARD AND CONTROL DIVISION**
GREGG VANDERGRIFF, P.E.
DIVISION MANAGER
1149 S. BROADWAY, SUITE 140
LOS ANGELES, CA 90015

ARCHITECTURAL: **ARCHITECTURAL DIVISION**
STEVEN FIERCE, A.I.A.
PRINCIPAL ARCHITECT
1149 S. BROADWAY, SUITE 830
LOS ANGELES, CA 90015
(213) 485-4000
FAX (213) 485-4836
CONTACT - CELSO DEL POSO
SR. ARCHITECT
ZOHRA AKHTER
PROJECT ARCHITECT
RICHARD FISHER
LANDSCAPE ARCHITECT
GREG MOSER
LANDSCAPE DESIGNER

STRUCTRUAL CONSULTANT: **NAST ENTERPRISES CORP.**
554 S. SAN VICENTE BLVD, SUITE 202
LOS ANGELES, CA 90048
(310) 268-9419

SURVEY: **SURVEY DIVISION**
BILL KNIGHT
ENGINEER OF SURVEYS
201 N. FIGUEROA ST.
LOS ANGELES, CA 90012

GEOTECHNICAL: **GEOTECHNICAL ENGINEERING DIVISION**
PATRICK SCHMIDT
DIVISION MANAGER
1149 S. BROADWAT, SUITE 100
LOS ANGELES, CA 90015
CONTACT - EASTON FORCIER, P.E.

ENVIRONMENTAL: **ENVIRONMENTAL MANAGEMENT GROUP**
MARIA MARTIN
GROUP MANAGER
1149 S. BROADWAY, SUITE 600
LOS ANGELES, CA 90015

ARCHITECTURAL SUPPORT: **SPARANO + MOONEY ARCHITECTURE (SMA)**
642 MOULTON AVE, STUDIO W4
LOS ANGELES, CA 90031

CIVIL ENGINEER CONSULTANT: **VCA ENGINEERS, INC.**
1041 S. GARFIELD AVE, SUITE #210
ALHAMBRA, CA 91801
CONTACT - AUTUMN WAGGONER

MECHANICAL & PLUMBING CONSULTANT: **MAROKO & SHWE, INC.**
1106-B WEST MAGNOLIA BLVD.
BURBANK, CA 91506
CONTACT - JAMES SHWE, P.E.

ELECTRICAL CONSULTANT: **SILVER ROTH AND ASSOCIATES**
511 S. FAIRFAX AVENUE
LOS ANGELES, CA 90036
CONTACT - FELIX ROTH

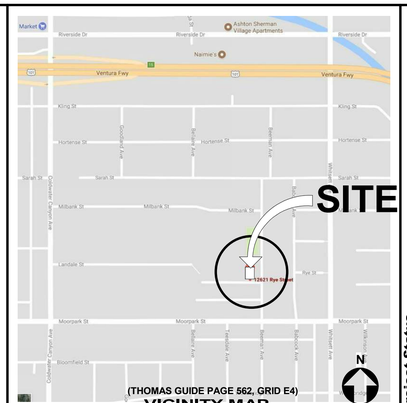

(THOMAS GUIDE PAGE 562, GRID E4)
VICINITY MAP
NOT TO SCALE

THE CITY OF LOS ANGELES OR ITS OFFICERS OR AGENTS SHALL NOT BE RESPONSIBLE FOR THE ACCURACY OR COMPLETENESS OF ELECTRONIC COPIES OF THIS PLAN SHEET.

TTLB TEMPLATE REVISION DATE: 08/2014
SHEET ISSUE DATE: 06/01/17
FILE PATH: C:\Users\282947\Documents\SCRC-Project Model_Central_Final_lmyounge_03Nov2021_124420.rvt

REVISION DATES (DESIGN STAGE ONLY)

BUREAU OF ENGINEERING
DEPARTMENT OF PUBLIC WORKS
CITY OF LOS ANGELES

ENGINEERING
CITY OF LOS ANGELES

NO.	REVISION DESCRIPTION	DATE	BY

WORK ACCEPTED: ---
SERIAL NO. ---
BUILDING NO. --
INDEX NO. RP-300106

REGISTERED PROFESSIONAL ENGINEER
TED S. STEPHEN ALLEN
No. C-66399
CIVIL
STATE OF CALIFORNIA

ACCEPTED BY:
CITY ENGINEER
TED ALLEN, PE
DATE: 9/12/2022

Electronically Signed by Deborah Weintraub
DATE: 2022.09.12 08:39:34
CHIEF DEPUTY CITY ENGINEER / PROGRAM MANAGER
DATE:
CITY ENGINEER

CITY OF LOS ANGELES
VERTICAL CONTROL:
HORIZONTAL CONTROL:
SHEET TITLE: COVER SHEET
PROJECT: STUDIO CITY RECREATION CENTER
ADDRESS: 12621 RYE STREET, STUDIO CITY, CA 91604

Project Status
PROJECT ISSUE DATE: 1-24-2019

WORK ORDER NO.
E170267B
PLAN FILE NO.
DRAWING NO.
G001
SHEET 1 OF SHEETS 211

PLOTTED:9/1/2022 10:35:41 AM

DRAWING INDEX

GENERAL
- G001 COVER SHEET
- G002 DRAWING INDEX, PROJECT DATA
- G003 GREEN BUILDING CODES AND FORMS
- G004 GREEN BUILDING CODES AND FORMS
- G005 GREEN BUILDING CODES AND FORMS
- G006 GREEN BUILDING CODE & LEED
- G007 SOILS REPORT APPROVAL LETTERS
- G008 TRANSIT MAP, SCHOOL DIST. WAIVER ETC.
- G101 TITLE 24- DISABLED ACCESS REQUIREMENTS
- G102 TITLE 24- DISABLED ACCESS REQUIREMENTS
- G103 TITLE 24- DISABLED ACCESS REQUIREMENTS
- G104 TITLE 24- DISABLED ACCESS REQUIREMENTS
- G105 TITLE 24- DISABLED ACCESS REQUIREMENTS
- G106 TITLE 24- DISABLED ACCESS REQUIREMENTS
- G107 TITLE 24- DISABLED ACCESS REQUIREMENTS
- G108 TITLE 24- DISABLED ACCESS REQUIREMENTS
- G109 TITLE 24- DISABLED ACCESS REQUIREMENTS
- G110 TITLE 24- DISABLED ACCESS REQUIREMENTS
- G111 TITLE 24- DISABLED ACCESS REQUIREMENTS
- G112 TITLE 24- DISABLED ACCESS REQUIREMENTS
- G113 TITLE 24- DISABLED ACCESS REQUIREMENTS
- G114 TITLE 24- DISABLED ACCESS REQUIREMENTS
- G115 TITLE 24- DISABLED ACCESS REQUIREMENTS
- G200 TITLE 24- ENERGY CALCULATION (REF. ONLY)

SURVEY
- 01 SITE SURVEY-NORTH WEST (REF. ONLY)
- 02 SITE SURVEY -SOUTH WEST (REF. ONLY)
- 03 SITE SURVEY - NORTH-EAST/ SOUTH-EAST (REF. ONLY)

CIVIL
- C100 GENERAL NOTES, LEGEND, AND ABBREVIATIONS
- C101 GENERAL NOTES, LEGEND, AND ABBREVIATIONS
- C102 DEMOLITION PLAN
- C103 DEMOLITION PLAN
- C200 COMPOSITE SITE CONTROL PLAN
- C201 SITE CONTROL PLAN
- C202 SITE CONTROL PLAN
- C300 GRADING PLAN
- C301 GRADING PLAN
- C302 GRADING PLAN
- C303 GRADING SECTIONS
- C304 GRADING SECTIONS
- C400 COMPOSITE UTILITY PLAN
- C401 ENLARGED UTILITY PLAN
- C402 ENLARGED UTILITY PLAN
- C403 LID PLAN
- C500 MISCELLANEOUS DETAILS
- C501 MISCELLANEOUS DETAILS
- C502 MISCELLANEOUS DETAILS
- C503 MISCELLANEOUS DETAILS
- C504 MISCELLANEOUS DETAILS
- C505 MISCELLANEOUS DETAILS
- C506 MISCELLANEOUS DETAILS
- C600 EROSION CONTROL PLAN
- C601 EROSION CONTROL DETAILS

ARCHITECTURAL
- A0.01 DEMOLITION GENERAL NOTES
- A0.02 ARCHITECTURAL DEMOLITION SITE PLAN
- A001 GENERAL NOTES
- A002 SYMBOLS AND ABBREVIATIONS
- A010 SITE PLAN
- A011 PLOT PLAN
- A101 FLOOR PLAN
- A102 SLAB PLAN
- A103 UPPER ROOF PLAN
- A104 LOWER ROOF PLAN
- A105 UPPER RELFECTED CEILING PLAN
- A106 LOWER REFLECTED CEILING PLAN
- A201 EXTERIOR ELEVATIONS
- A202 EXTERIOR ELEVATIONS
- A203 EXTERIOR ELEVATIONS
- A301 BUILDING SECTIONS
- A302 BUILDING SECTIONS
- A303 BUILDNG SECTIONS
- A401 WALL SECTIONS
- A402 WALL SECTIONS
- A403 WALL SECTIONS
- A404 WALL SECTIONS
- A501 ENLARGED PLANS
- A502 ENLARGED PLANS
- A503 INTERIOR ELEVATIONS
- A504 INTERIOR ELEVATIONS
- A505 INTERIOR ELEVATIONS
- A506 INTERIOR ELEVATIONS
- A507 INTERIOR ELEVATIONS
- A508 INTERIOR ELEVATIONS
- A509 INTERIOR ELEVATIONS
- A510 INTERIOR ELEVATIONS
- A511 INTERIOR ELEVATIONS
- A512 SHADE CANOPY PLAN & ELEVATIONS
- A520 WALL TYPES
- A530 TRASH ENCLOSURE
- A601 EXTERIOR DETAILS CURTAIN WALL
- A602 EXTERIOR DETAILS
- A603 EXTERIOR DETAIL
- A621 INTERIOR DETAIL
- A622 INTERIOR DETAIL- FINISH
- A624 INTERIOR DETAIL CEILING
- A626 INTERIOR DETAIL- CABINETRY
- A627 INTERIOR DETAILS
- A628 INTERIOR DETAIL- EXTERIOR SINK
- A630 ROOF DETAILS
- A631 ROOF DETAILS
- A632 ROOF DETAILS
- A633 ROOF DETAILS
- A634 ROOF DETAIL- SOLAR PANEL
- A640 DOOR DETAIL
- A641 WINDOW DETAIL
- A642 WINDOW DETAILS
- A650 FLOOR DETAIL
- A701 DOOR SCHEDULE
- A702 WINDOW SCHEDULE
- A703 FINISH SCHEDULE
- A704 SIGNAGE SCHEDULE
- A801 CONSTRUCTION SIGN, BUILDING PLAQUE

STRUCTURAL
- S1.0 STRUCTURAL AND GENERAL NOTES
- S1.1 STRUCTURAL AND GENERAL NOTES
- S1.2 STRUCTURAL AND GENERAL NOTES
- S2 FRAMING DETAILS
- S3 FRAMING DETAILS
- S4 FRAMING DETAILS
- S5 FOUNDATION AND GROUND FLOOR FRAMING PLAN
- S6 MULTI - PURPOSE AND UTILITY BLDG. ROOF FRAMING PLAN
- S7 GYMNASIUM ROOF FRAMING PLAN
- S7.1 GYMNASI UM CANOPY FRAMI NG PLAN
- S8 MOMENT FRAME ELEVATIONS AND BUILDING SECTIONS
- S9 MOMENT FRAME ELEVATIONS AND BUILDING SECTIONS
- S10 MOMENT FRAME ELEVATIONS AND BUILDING SECTIONS
- S11 MOMENT FRAME ELEVATIONS AND BUILDING SECTIONS
- S12 MULTI-PURPOSE BLDG. SECTIONS
- S13 STRUCTURAL COLUMN SCHEDULE
- S14 STRUCTURAL BEAM SCHEDULE
- S14.1 STRUCTURAL BEAM SCHEDULE
- S14.2 STRUCTURAL BEAM SCHEDULE
- S15 FOUNDATION GRADE BEAM REINF. SCHED. M500-M510
- S16 FOUNDATION GRADE BEAM REINF. SCHED. M511-M552
- S17 FOUNDATION SECTIONS
- S18 FOUNDATION SECTIONS
- S19 SLAB + FDN. SECTI ONS AND DETAI LS
- S20 TYPI CAL STEEL FRAMI NG DETAI LS
- S21 TYPI CAL STEEL FRAMI NG DETAI LS
- S22 STEEL FRAMING DETAILS
- S24 SMF QA STANDARD PLAN SHT 1 OF 3
- S25 SMF QA STANDARD PLAN SHT 2 OF 3
- S26 SMF QA STANDARD PLAN SHT 3 OF 3

MECHANICAL
- M001 LEGEND, NOTES & SHEET INDEX
- M002 TITLE-24
- M003 TITLE-24
- M004 TITLE-24
- M005 SCHEDULES
- M006 SCHEDULES
- M100 HVAC FLOOR PLAN
- M103 HVAC ROOF PLAN
- M104 HVAC SECTION
- M401 DETAILS
- M402 DETAILS
- M403 DETAILS
- M404 DETAILS
- M405 DETAILS
- M501 CONTROLS
- M502 CONTROLS FOR GYMNASIUM
- M503 CONTROLS FOR COMMUNITY ROOM & OFFICE
- M504 CONTROLS FOR COMM. RM & ELEC RM
- M505 CONTROLS
- M506 CONTROLS
- M507 CONTROLS

PLUMBING
- P001 LEGEND, GENERAL NOTES AND SHEET INDEX
- P002 SCHEDULES
- P003 SCHEDULES
- PS010 PLUMBING SITE PLAN
- P100 FLOOR PLAN
- P103 ROOF PLAN
- P401 ENLARGED FLOOR PLANS
- P402 ENLARGED FLOOR PLANS
- P403 ENLARGED FLOOR PLANS
- P501A COLD AND HOT WATER RISER DIAGRAMS- PART A
- P501B COLD AND HOT WATER RISER DIAGRAMS- PART B
- P502 WASTE AND VENT RISER DIAGRAMS
- P601 DETAILS

ELECTRICAL
- E0.1 GENERAL NOTES AND SPECIFICATIONS, ONE LINE DIAGRAM AND SYMBOL SCHEDULE
- E0.2 ELECTRICAL DETAILS AND ELEVATIONS AND LIGHTING FIXTURE SCHEDULE
- E0.3 PANEL SCHEDULES
- E1.0 SITE LIGHTING PLAN
- E1.1 SITE POWER AND SIGNALPLAN
- E1.2 SITE ELECTRICAL DEMOLITION PLAN
- E1.3 SITE LIGHTING CALCULATION
- E2.1 LIGHTING PLAN
- E2.2 LIGHTING CONTROL INTENT
- E3.1 POWER AND SIGNAL PLAN
- E3.2 POWER PLAN - MECHANICAL EQUIPMENT
- E3.3 POWER PLAN - ROOF
- E4.1 LOW VOLTAGE - FLOOR PLAN
- E5.1 TITLE 24
- E5.2 TITLE 24

LANDSCAPE
- L001 LANDSCAPE CONSTRUCTION NOTES, SHEET 1
- L002 LANDSCAPE CONSTRUCTION NOTES, SHEET 2
- L003 LANDSCAPE CONSTRUCTION NOTES, SHEET 3
- L101 TREE PROTECTION (TPZ) PLAN
- L401 CONSTRUCTION PLAN
- L402 CONSTRUCTION DETAILS, SHEET 1
- L403 CONSTRUCTION DETAILS, SHEET 2
- L404 CONSTRUCTION DETAILS, SHEET 3
- L405 CONSTRUCTION DETAILS, SHEET 4
- L600 IRRIGATION DEMOLITION PLAN
- L601 IRRIGATION PLAN, SHEET 1
- L602 IRRIGATION PLAN, SHEET 2
- L603 IRRIGATION NOTES
- L604 IRRIGATION DETAILS, SHEET 1
- L605 IRRIGATION DETAILS, SHEET 2
- L606 IRRIGATION DETAILS, SHEET 3
- L607 IRRIGATION AS-BUILT RECORD DRAWINGS, SHT 1
- L608 IRRIGATION AS-BUILT RECORD DRAWINGS, SHT 2
- L701 PLANTING PLAN
- L702 PLANTING NOTES/FORMS
- L703 PLANTING DETAILS

Grand total: 211

PROJECT DATA

SITE SUMMARY 1

COUNCIL DISTRICT	2
ZONE:	OS-1XL-RIO
TRACT:	TR 1000
BLOCK:	
LOT:	209-ARB 2
FIRE DISTRICT:	NO
LOT SIZE:	368,699 SQ.FT.
ALLOWABLE BUILDING HEIGHT	35'-0" PER CPC 2002-1621-C (SEE G006 FOR APPROVED COPY)

PER DEPARTMENT OF RECREATION AND PARKS CITY CHARTER AUTHORITY DOCUMENT, ATTACHED ON SHEET G008, THE DEPARTMENT OF RECREATION AND PARKS IS EXEMPT FROM CITY ZONING REQUIREMENTS.

BUILDING USE:	RECREATION CENTER
STORIES:	ONE
BUILDING HEIGHT:	32'-11 5/16"
BUILDING USE:	A3/B
CONSTRUCTION TYPE:	TYPE III-B
SPRINKLERED:	YES (NFPA 13)
FIRE ALARM PROVIDED:	YES (VOICE EVACUATION WILL BE PROVIDED)
GROSS BUILDING AREA:	11,577 SQ.FT. (EXCLUDING OVERHANGS)

ALLOWABLE FLOOR AREA:	ALLOWABLE	PROVIDED
ALLOWABLE FLOOR AREA INCREASE DUE TO SECTION 506.3 AUTOMATIC SPRINKLER SYSTEM		
A3 OCCUPANCY	38,000 SQ. FT.	12,087 SQ. FT.
B OCCUPANCY	76,000 SQ. FT.	1,546 SQ. FT.
A3 OCCUPANCY		
GYMNASIUM (A-3) NO STAGE	7,144 SQ. FT.	
ART STUDIO (A-3)	1,316 SQ. FT.	
OVERHANG-GYM	2,874 SQ. FT.	
OVERHANG-ART STUDIO	441 SQ. FT.	
LOBBY (A-3)	312 SQ.FT.	
	12,087 SQ. FT.	
B OCCUPANCY		
STAFF OFFICE	365 SQ. FT.	
KITCHEN	167 SQ. FT.	
BREEZEWAY- OFFICE	1014 SQ. FT.	
	1,546 SQ. FT.	

BUILDING FLOOR AREA BREAKDOWN

		OCCUPANTS
GYMNASIUM (A-3) NO STAGE, FIXED SEATING	7,144SQ. FT.	1:7= 1,020 OCCUPANTS
ART STUDIO (A-3)	1,316 SQ. FT.	1:15= 88 OCCUPANTS
STAFF OFFICE (B)	365 SQ. FT.	1:100= 4 OCCUPANTS
LOBBY(A-3)	312 SQ. FT.	1:15= 21 OCCUPANTS
STORAGE 1 (S)	374 SQ. FT.	1:200= 2 OCCUPANTS
OFFICE RESTROOM	79 SQ. FT.	
PARK STORAGE(S)	174 SQ. FT.	1:200= 1 OCCUPANT
GOLD ROOM(S)	24 SQ. FT.	1:200= 1 OCCUPANT
KITCHEN (B)	167 SQ. FT.	1:100= 2 OCCUPNATS
PANTRY(S)	72 SQ. FT	1:200= 1 OCCUPANT
STORAGE 2 (S)	69 SQ. FT.	1:200= 1 OCCUPANT
ELECTRICAL ROOM(S)	112 SQ. FT.	
COMMUNICATION ROOM(S)	97 SQ. FT.	
STORAGE 3 (S)	92 SQ. FT.	
JANITOR (S)	75 SQ. FT.	1:100= 1 OCCUPANT
OUTDOOR RESTROOMS	114 SQ. FT.	
COMMUNITY RESTROOMS	130 SQ.FT.	
CORRIDOR	33 SQ. FT.	
OVERHANG-GYM	2,874 SQ. FT.	1:15= 192 OCCUPANTS
OVERHANG- ART STUDIO	441 SQ. FT.	1:15= 29 OCCUPANTS
BREEZWAY-OFFICE	1014 SQ. FT.	1:100= 10 OCCUPANTS
BUILDING CODE DEFINED TOTAL BUILDING AREA: (INCLUDING OVERHANGS)	15,078 SQ. FT.	1,373 OCCUPANTS
ZONING CODE DEFINED BUILDING AREA: (EXCLUDING -5' ON OVER HANG AND EXTERIOR WALLS	15,769 SQ. FT.	(11,055+ 4,714)

EXIT REQUIREMENTS

GYMNASIUM BLDG.-GYM	1,023 OCCUPANTS = 4 EXITS REQ.	1,023 X.2= 204.6 INCHES
- PROVIDED	4 EXITS = 256 OCCUPANTS IN EACH EXIT	4 EXITS = 204/4 = 51 INCHES MIN.
COMMUNITY BLDG-ART STUDIO	88 OCCUPANTS	88 X .2 =17.6 INCHES
- PROVIDED	3 EXITS =30 OCCUPANTS EACH	3 EXITS =32" MIN. EACH PROVIDED

PLUMBING FIXTURE REQUIREMENTS
(PER TABLE 4-1 2016 LAPC)

GROUP A		RATIO
GYMNASIUM	7,159 SQ. FT	1: 30
ART STUDIO	1,324 SQ. FT	1: 30
	TOTAL= 8,480 SQ. FT	1:30= 283 OCCUPANTS
GROUP B		
STAFF OFFICE	367 SQ. FT	1:200
KITCHEN	167 SQ. FT.	1:200
	TOTAL 534 SQ. FT	1:200= 5 OCCUPANTS
	TOTAL OCCUPANTS= 288	144 MALE + 144 FEMALE

FIXTURE COUNT

	REQUIRED	PROVIDED
# OF WATERCLOSET		
- MALE: 1:1-200=2	2	8 UNISEX WATERCLOSET PROVIDED
- FEMALE: 4:101-200=4	4	
# OF URINAL		
- MALE: 2: 101-200=2	2	2 URINALS PROVIDED
# OF LAVATORIES		
MALE: 1: 1-200 =1	1	
FEMALE: 2:101-200= 2	2	5 LAVATORIES PROVIDED
# OF DRINKING FOUNTAIN		
2: 251-500	2	2 PROVIDED
# OF SERVICE SINK		
- 1 SERVICE SINK	1	2 PROVIDED

PER DEPARTMENT OF RECREATION AND PARKS CITY CHARTER AUTHORITY DOCUMENT, ATTACHED ON SHEET G008, THE DEPARTMENT OF RECREATION AND PARKS IS EXEMPT FROM CITY ZONING REQUIREMENTS.

PARKING SUMMARY (FOR REF. ONLY)
(PER ZONING CODE SECTION 12.21A4.(C)

EXISTING PARKING TO BE DEMOLISED	25 SPACES	
PARKING PROVIDED: CODE BREAKDOWN		
ONSITE PARKING PROVIDED	35	
BYCYCLE CREDIT (30% OF 78= EQUIVALENT TO 23.4 SPACES; PROVIDED 33 BIKE SPACES=8 CAR PARKING SPACES))	8	
TOTAL PARKING PROVIDED (INCLUDING BICYCLE CREDIT)=	43	

PER DEPARTMENT OF RECREATION AND PARKS CITY CHARTER AUTHORITY DOCUMENT, ATTACHED ON SHEET G008, THE DEPARTMENT OF RECREATION AND PARKS IS EXEMPT FROM CITY ZONING REQUIREMENTS.

TYPES OF PARKING BREAKDOWN:

STANDARD	35	
COMPACT	0	
EV CHARGING STATION(3 STANDARD + 1 VAN ACCESSIBLE)	4	
HANDICAPPED ACCESSIBLE PARKING	2	(5% OF 35)
CARPOOL/VAN POOL	3	(5% OF 35)
CLEAN AIR VEHICLES	6	(35 REQUIRES 4)

ORDINANCE 182386: PARKING SPACES BY THE CODE FOR ALL USER MAY BE REPLACED BY BICYCLE PARKING AT A RATIO OF ONE AUTOMOBILE SPACE FOR EVERY FOUR(4) BICYCLE PARKING PROVIDED.

LONG TERM BIKE PARKING PROVIDED	3	FULL-TIME EMPLOYEE 5
SHORT TERM BIKE PARKING PROVIDED	30	15 RACKS, 2 BIKES PER RACK
TOTAL BICYCLE PARKING PROVIDED	33	

BUREAU OF ENGINEERING — OFFICIAL RECORD

SEPERATE PERMIT REQUIRED BY CONTRACTOR (NOT LIMITED TO)

- DEMOLITION
- TRASH ENCLOSURE (BLOCK WALLS)
- ELECTRICAL
- MECHANICAL
- PLUMBING
- FIRE SPRINKLER SYSTEM
- EXTERIOR BUILDING SIGNAGE
- SOLAR PHOTOVOLTAIC
- STOREFORNT

ENGINEERING — CITY OF LOS ANGELES

BUREAU OF ENGINEERING — DEPARTMENT OF PUBLIC WORKS — CITY OF LOS ANGELES

NO.	REVISION DESCRIPTION	DATE	BY

BUILDING NO. --

INDEX NO. RP-300106

LICENSED ARCHITECT — TIMOTHY J. LOMELIN — No. C 23333 — REGISTERED PROFESSIONAL — STATE OF CALIFORNIA

CITY ENGINEER	DATE:
ARCHITECTURAL DIVISION — LIC. NO.: C 23333	1-24-2019
ARCHITECT: ROBERT LOMELIN	1-24-2019
DESIGNED BY: Z. AKHTER, M. CHAVARRIA, A. KIM, M. LAM	1-24-2019
DRAWN BY: Z. AKHTER, M. CHAVARRIA, A. KIM	1-24-2019
CHECKED BY: ROBERT LOMELIN	1-24-2019
APPROVED BY:MAHMOOD KARIMZADEH,AIA, DEPUTY CITY ENGINEER	1-24-2019

TED ALLEN, PE

CLIENT: DEPARTMENT OF RECREATION AND PARKS
GENERAL MANAGER: MICHAEL A. SHULL

SHEET TITLE: DRAWING INDEX, PROJECT DATA

PROJECT: STUDIO CITY RECREATION CENTER

ADDRESS: 12621 RYE STREET, STUDIO CITY, CA 91604

WORK ORDER NO. E170267B
PLAN FILE NO. 860
DRAWING NO. G002
SHEET 2 OF SHEETS 211

PLOTTED:7/30/2019 2:50:58 PM

THE CITY OF LOS ANGELES OR ITS OFFICERS OR AGENTS SHALL NOT BE RESPONSIBLE FOR THE ACCURACY OR COMPLETENESS OF ELECTRONIC COPIES OF THIS PLAN SHEET.

FILE PATH: A360://Studio City Recreation Center/SCRC-Project Model_Central_Final.rvt

SHEET ISSUE DATE: 06/01/17

REVISION DATES (DESIGN STAGE ONLY)

STORM WATER POLLUTION CONTROL
(2017 Los Angeles Green Building Code)

FORM GRN 1

Storm Water Pollution Control Requirements for Construction Activities
Minimum Water Quality Protection Requirements for All Construction Projects

The following notes shall be incorporated in the approved set of construction/grading plans and represents the minimum standards of good housekeeping which must be implemented on all construction projects.

Construction means constructing, clearing, grading or excavation that result in soil disturbance. Construction includes structure teardown (demolition). It does not include routine maintenance to maintain original line and grade, hydraulic capacity, or original purpose of facility; emergency construction activities required to immediately protect public health and safety; interior remodeling with no outside exposure of construction material or construction waste to storm water; mechanical permit work; or sign permit work. (Order No. 01-182, NPDES Permit No. CAS004001 – Part 5: Definitions)

1. Eroded sediments and pollutants shall be retained on site and shall not be transported from the site via sheet flow, swales, area drains, natural drainage or wind.
2. Stockpiles of earth and other construction-related materials shall be covered and/or protected from being transported from the site by wind or water.
3. Fuels, oils, solvents and other toxic materials must be stored in accordance with their listing and shall not contaminate the soil nor the surface waters. All approved toxic storage containers are to be protected from the weather. Spills must be cleaned up immediately and disposed of properly and shall not be washed into the drainage system.
4. Non-storm water runoff from equipment and vehicle washing and any other activity shall be contained on the project site.
5. Excess or waste concrete may not be washed into the public way or any drainage system. Provisions shall be made to retain concrete waste on-site until it can be appropriately disposed of or recycled.
6. Trash and construction –related solid wastes must be deposited into a covered receptacle to prevent contamination of storm water and dispersal by wind.
7. Sediments and other materials shall not be tracked from the site by vehicle traffic. The construction entrance roadways must be stabilized so as to inhibit sediments from being deposited into the street/public ways. Accidental depositions must be swept up immediately and may not be washed down by rain or by any other means.
8. Retention basins of sufficient size shall be provided to retain storm water runoff on-site and shall be properly located to collect all tributary site runoff.
9. Where retention of storm water runoff on-site is not feasible due to site constraints, runoff may be conveyed to the street and the storm drain system provided that an approved filtering system is installed and maintained on-site during the construction duration.

As a covered entity under Title II of the Americans with Disabilities Act, the City of Los Angeles does not discriminate on the basis of disability and, upon request, will provide reasonable accommodation to ensure equal access to its programs, services and activities.

VOC AND FORMALDEHYDE LIMITS
2017 Los Angeles Green Building Code
(Incorporate this form into the plans)

FORM GRN 11

The tables below are taken from the 2017 Los Angeles Green Building Code
Tables 4.504.1, 4.504.2, 4.504.3, 4.504.5, 5.504.4.1, 5.504.4.2, 5.504.4.3, 5.504.4.5

VOC CONTENT LIMITS FOR ARCHITECTURAL COATINGS[2,3]
Grams of VOC per Liter of Coating,
Less Water and Less Exempt Compounds

COATING CATEGORY[2,3]	CURRENT LIMIT
Flat coatings	50
Nonflat coatings	100
Nonflat-high gloss coatings	150
Specialty Coatings	
Aluminum roof coatings	400
Basement specialty coatings	400
Bituminous roof coatings	50
Bituminous roof primers	350
Bond breakers	350
Concrete curing compounds	350
Concrete/masonry sealers	100
Driveway sealers	50
Dry fog coatings	150
Faux finishing coatings	350
Fire resistive coatings	350
Floor coatings	100
Form-release compounds	250
Graphic arts coatings (sign paints)	500
High temperature coatings	420
Industrial maintenance coatings	250
Low solids coatings[1]	120
Magnesite cement coatings	450
Mastic texture coatings	100
Metallic pigmented coatings	500
Multicolor coatings	250
Pretreatment wash primers	420
Primers, sealers, and undercoaters	100
Reactive penetrating sealers	350
Recycled coatings	250
Roof coatings	50
Rust preventative coatings	250
Shellacs	
Clear	730
Opaque	550
Specialty primers, sealers and undercoaters	100
Stains	250
Stone consolidants	450
Swimming pool coatings	340
Traffic marking coatings	100
Tub and tile refinish coatings	420
Waterproofing membranes	250
Wood coatings	275
Wood preservatives	350
Zinc-rich primers	340

[1] Grams of VOC per liter of coating, including water and including exempt compounds.
[2] The specified limits remain in effect unless revised limits are listed in subsequent columns in the table.
[3] Values in this table are derived from those specified by the California Air Resources Board, Architectural Coatings Suggested Control Measure, February 1, 2008. More information is available from the Air Resources Board.

FORMALDEHYDE LIMITS[1]
Maximum Formaldehyde Emissions in Parts per Million.

PRODUCT	CURRENT LIMIT
Hardwood plywood veneer core	0.05
Hardwood plywood composite core	0.05
Particleboard	0.09
Medium density fiberboard	0.11
Thin medium density fiberboard[2]	0.13

[1] Values in this table are derived from those specified by the California Air Resources Board, Air Toxics Control Measure for Composite Wood as tested in accordance with ASTM E 1333. For additional information, see California Code of Regulations, Title 17, Sections 93120 through 93120.12.
[2] Thin medium density fiberboard has a maximum thickness of $^{5}/_{16}$ inches (8 mm).

SEALANT VOC LIMIT
Less Water and Less Exempt Compounds in Grams per Liter

SEALANTS	CURRENT VOC LIMIT
Architectural	250
Marine deck	760
Nonmembrane roof	300
Roadway	250
Single-ply roof membrane	450
Other	420
SEALANT PRIMERS	
Architectural	
Nonporous	250
Porous	775
Modified bituminous 500	500
Marine deck	760
Other	750

Note: For additional information regarding methods to measure the VOC content specified in these tables, see South Coast Air Quality Management District Rule 1168.

ADHESIVE VOC LIMIT [1,2]
Less Water and Less Exempt Compounds in Grams per Liter

ARCHITECTURAL APPLICATIONS	CURRENT VOC LIMIT
Indoor carpet adhesives	50
Carpet pad adhesives	50
Outdoor carpet adhesives	150
Wood flooring adhesives	100
Rubber floor adhesives	60
Subfloor adhesives	50
Ceramic tile adhesives	65
VCT and asphalt tile adhesives	50
Drywall and panel adhesives	50
Cove base adhesives	50
Multipurpose construction adhesives	70
Structural glazing adhesives	100
Single-ply roof membrane adhesives	250
Other adhesives not specifically listed	50
SPECIALTY APPLICATIONS	
PVC welding	510
CPVC welding	490
ABS welding	325
Plastic cement welding	250
Adhesive primer for plastic	550
Contact adhesive	80
Special purpose contact adhesive	250
Structural wood member adhesive	140
Top and trim adhesive	250
SUBSTRATE SPECIFIC APPLICATIONS	
Metal to metal	30
Plastic foams	50
Porous material (except wood)	50
Wood	30
Fiberglass	80

[1] If an adhesive is used to bond dissimilar substrates together, the adhesive with the highest VOC content shall be allowed.
[2] For additional information regarding methods to measure the VOC content specified in this table, see South Coast Air Quality Management District Rule 1168, http://www.arb.ca.gov/DRDB/SC/CURHTML/R1168.PDF.

As a covered entity under Title II of the Americans with Disabilities Act, the City of Los Angeles does not discriminate on the basis of disability and, upon request, will provide reasonable accommodation to ensure equal access to its programs, services and activities.

2017 Los Angeles Green Building Code

FORM GRN 5

MANDATORY REQUIREMENTS CHECKLIST
NEWLY CONSTRUCTED NON-RESIDENTIAL BUILDINGS
(COMPLETE AND INCORPORATE THIS FORM INTO THE PLANS)

Permit # _____ - _____ - _____ Date: _____

ITEM #	CODE SECTION	REQUIREMENT	REFERENCE SHEET (Sheet # or N/A)	COMMENTS (e.g. note #, detail # or reason for N/A)
		PLANNING AND DESIGN		
1	5.106.1	Storm water pollution prevention	G003	FORM GRN 1
2	5.106.4.1.1	Short-term bicycle parking	L401, L403	KEYNOTE 27/DETJ1/L403
3	5.106.4.1.2	Long-term bicycle parking	L401, L403	KEYNOTE 21/DETJ5/L403
4	5.106.5.2	Designated parking	L401, L404	KEYNOTE 3/DETAIL J13
5	5.106.5.3	Electric vehicle charging	L401/E1.0	J1/L404, E-NOTE #2
6	5.106.8	Light pollution reduction	G003	GRN15#1
7	5.106.10	Grading and paving	C300s/C400s	
8	5.106.11	Hardscape alternatives	L401	Hardscape table
		ENERGY EFFICIENCY		
9	5.211.1	Solar ready buildings	A103	Keynote 3, Project has PV
		WATER EFFICIENCY & CONSERVATION		
10	5.303.1.1	New buildings in excess of 50,000 sqft	N/A	Building is 11,624 sq. ft.
11	5.303.1.2	Excess consumption	G003	GRN15#2
12	5.303.2	Water reduction	G003	GRN17,GRN18#2
13	5.303.3	Water conserving plumbing fixtures and fittings	G003	FORM GRN 15 #3
14	5.303.3.3	Showerheads	G003	FORM GRN 15 #4
15	5.304.1	Outdoor water use in landscape areas	L701/L702/G003	L702/ MWELO/GRN18#3
16	5.304.3	Irrigation controller and sensor application	L601	LEGEND
17	5.304.4	Outdoor water use meters	L601/G003	LEGEND/GRN18#4,5
18	5.304.5	Exterior faucets	G003	GRN18 #6
19	5.305.1	Graywater ready	P100,P401,P402	GRN 18#7
20	5.305.2	Recycled water supply to fixtures	P100, P401,P402	GRN 18 #8
21	5.305.3	Cooling towers	N/A	NO COOLING TOWER
22	5.305.4	Groundwater discharge	G003	GRN18 #10
		MATERIAL CONSERVATION & RESOURCE EFFICIENCY		
23	5.407.1	Weather protection	G003	GRN 15 #7
24	5.407.2.1	Sprinklers	G003	GRN-15, #8
25	5.407.2.2.1	Nonabsorbent floor and wall finishes	G003,A101,A703	GRN-15, #9, 10
26		Exterior door protection	G003,A101,A201	GRN 15 #9,10
27	5.407.2.2.2	Flashing	G003, A640	GRN-15, #11
28	5.408.1	Construction waste diversion	G003	GRN-15, #12
29	5.408.3	Excavated soil and land clearing debris	G003	GRN-15, #13

As a covered entity under Title II of the Americans with Disabilities Act, the City of Los Angeles does not discriminate on the basis of disability and, upon request, will provide reasonable accommodation to ensure equal access to its programs, services and activities.

2017 Los Angeles Green Building Code

FORM GRN 5

ITEM #	CODE SECTION	REQUIREMENT	REFERENCE SHEET (Sheet # or N/A)	COMMENTS (e.g. note #, detail # or reason for N/A)
30	5.410.1	**Recycling by occupants**	See A010	KEYNOTE 40
31	5.410.2	**Commissioning (> 10,000 sq ft.)**	G004	GRN 20,
32	5.410.2.1	– **Owner's Project Requirements (OPR)**	G004	GRN 20
33	5.410.2.2	– **Basis of Design (BOD)**	G004	GRN 21
34	5.410.2.3	– **Commissioning plan**	G004	GRN 23
35	5.410.2.4	– **Functional performance testing**	G005	GRN 24
36	5.410.2.5.1	– **Systems manual**	G005	GRN 25
37	5.410.2.5.2	– **Systems operations training**	G005	GRN 24
38	5.410.2.6	– **Commissioning report**	G005	GRN 26
39	5.410.4	**Testing and adjusting (< 10,000 sq ft)**		
40	5.410.4.2	– **Systems**		
41	5.410.4.3	– **Procedures**		
42	5.410.4.3.1	– **HVAC balancing**		
43	5.410.4.4	– **Reporting**		
44	5.410.4.5	– **Operation and maintenance manual**		
45	5.410.4.5.1	– **Inspections and reports**		
		ENVIRONMENTAL QUALITY		
46	5.503.1	**Fireplace and Woodstoves**	N/A	NO FIREPLACE
47	5.504.1.3	**Temporary ventilation**	G003	GRN 15 #17
48	5.504.3	**Covering of duct openings and protection of mechanical equipment during construction**	G003	GRN 15 # 18
49	5.504.4	**Finish material pollutant control**		
50	5.504.4.1	– **Adhesives, sealants, and caulks**		
51	5.504.4.3	– **Paints and coatings**		
52	5.504.4.3.1	– **Aerosol paints and coatings**	G003	GRN 15 #19,20
53	5.504.4.3.2	– **Verification**	G003	GRN15 #19,20
54	5.504.4.4	**Carpet systems**	G003	GRN15 #21
55	5.504.4.4.1	**Carpet cushion**	G003	GRN15 #22
56	5.504.4.5	**Composite wood products**	G003	GRN15 #23,24
57	5.504.4.6	**Resilient flooring systems**	G003	GRN15 #25
58	5.504.5.3	**Filters**	G003	GRN15 #26
59	5.504.7	**Environmental tobacco smoke (ETS) control**	G003	GRN15 #27
60	5.505.1	**Indoor moisture control**	G003	GRN 15#28
61	5.506.2	**Carbon dioxide (CO_2) monitoring**	G003	GRN15 #29
62	5.507.4.1	**Exterior noise transmission prescriptive method**	A010	SEE GEN. NOTE # 3
63		– **Exterior noise transmission for roof**	A010	SEE GEN. NOTE # 3
64		– **Exterior noise transmission for walls**	A010	SEE GEN. NOTE # 3
65		– **Exterior noise transmission for windows**	A010	SEE GEN. NOTE # 3
66	5.507.4.2	**Exterior noise transmission performance method**	A010	SEE GEN. NOTE # 3

As a covered entity under Title II of the Americans with Disabilities Act, the City of Los Angeles does not discriminate on the basis of disability and, upon request, will provide reasonable accommodation to ensure equal access to its programs, services and activities.

2017 Los Angeles Green Building Code

FORM GRN 5

ITEM #	CODE SECTION	REQUIREMENT	REFERENCE SHEET (Sheet # or N/A)	COMMENTS (e.g. note #, detail # or reason for N/A)
67	5.507.4.3	**Interior sound transmission**	A010	SEE GEN. NOTE # 3
68	5.508.1	**Ozone depletion and greenhouse gas reductions**	G003	GRN15 #30
69	5.508.2	**Supermarket refrigerant leak reduction**	N/A	N/A

As a covered entity under Title II of the Americans with Disabilities Act, the City of Los Angeles does not discriminate on the basis of disability and, upon request, will provide reasonable accommodation to ensure equal access to its programs, services and activities.

GREEN BUILDING CODE PLAN CHECK NOTES
NON-RESIDENTIAL BUILDINGS

2017 Los Angeles Green Building Code

FORM GRN 15

1. State on plans that the outdoor lighting systems shall be designed and installed to comply with all of the following:
   a. The minimum requirements in California Energy Code for Lighting Zones 1-4
   b. Backlight, Uplight and Glare (BUG) ratings as defined in IESNA TM-15-11
   c. Allowable BUG ratings not exceeding those shown in on Table 5.106.8. (5.106.8)
2. Separate submeters shall be installed in any building or new space within a building that is projected to consume more than 1,000 gal/day. (5.303.1.2)
3. New plumbing fixtures and fittings shall not exceed the maximum allowable flow rate specified in Section 5.303.3. (5.303.3)
4. When a shower is served by more than one showerhead, the combined flow rate of all the showerheads and/or other shower outlets controlled by a single valve shall not exceed 2.0 gallons per minute at 80psi, or the shower shall be designed to only allow one showerhead to be in operation at a time. (5.303.3.3)
5. For projects that include landscape work, the *Landscape Certification*, Form GRN 12, shall be completed prior to final inspection approval. (State Assembly Bill No. 1881)
6. Installed automatic irrigation system controllers are weather- or soil-based controllers. (WMELO, § 492.7)
7. Weather-resistant exterior wall and foundation envelope shall be detailed in conformance with Los Angeles Building Code Section 1403.2 and California Energy Code Section 150. (5.407.1)
8. Automatic landscape irrigators shall be installed such that it doesn't spray on the structure. (5.407.2.1)
9. New exterior entries and openings subject to foot traffic shall be protected against water intrusion using features such as overhangs, awnings and/or recesses for a combined depth over the entry of at least 4 feet. (5.407.2.2.1)
10. Nonabsorbent interior floor and wall finishes shall be used within at least two feet around and perpendicular to new exterior entries and/or opening subject to foot traffic. (5.407.2.2.1)
11. Exterior entries shall have flashing integrated with the drainage plane. (5.407.2.2.2)
12. Only a City of Los Angeles certified hauler will be used for hauling of construction waste. (5.408.1)
13. 100% of excavated soil and vegetation resulting from land clearing shall be reused or recycled. (5.408.3)
14. A final report for the testing and adjusting of all new systems shall be completed and provided to the field inspector prior to final approval. This report shall be signed by the individual responsible for performing these services. (5.410.4.4)
15. For all new equipment, an *Operation & Systems Manual* shall be provided to the owner and the field inspector at the time of final inspection. (5.410.4.5)
16. All new gas fireplaces must be direct-vent, sealed combustion type. Wood burning fireplaces are prohibited per AQMD Rule 445. (5.503.1, AQMD Rule 445)
17. If the new HVAC system is used during construction, use return air filters with a MERV of 8. Replace all filters immediately prior to occupancy. (5.504.1.3)
18. All new ducts and other new related air distribution components openings shall be covered with tape, plastic, or sheetmetal until the final startup of the heating, cooling and ventilating equipment. (5.504.3)
19. Architectural paints and coatings, adhesives, caulks and sealants shall comply with the Volatile Organic Compound (VOC) limits listed in Tables 5.504.4.1-5.504.4.3. (5.504.4.1- 5.504.4.3)
20. The *VOC Content Verification Checklist*, Form GRN 2, shall be completed and verified prior to final inspection approval. The manufacturer's specifications showing VOC content for all applicable products shall be readily available at the job site and be provided to the field inspector for verification. (5.504.4.3.2)
21. All new carpet installed in the building interior meets the testing and product requirements of one of the following:
    a. Carpet and Rug Institute's Green Label Plus Program
    b. California Department of Public Health's Specification 01350
    c. NSF/ANSI 140 at the Gold level
    d. Scientific Certifications Systems Indoor Advantage™ Gold (5.504.4.4)
22. All new carpet cushion installed in the building interior shall meet the requirements of the Carpet and Rug Institute Green Label program. (5.504.4.4.1)
23. New hardwood plywood, particle board, and medium density fiberboard composite wood products used in the interior or exterior of the building shall meet the formaldehyde limits. (5.504.4.5, 10.504.4.5)
24. The *Formaldehyde Emissions Verification Checklist*, Form GRN 3, shall be completed prior to final inspection approval. The manufacturer's specifications showing formaldehyde content for all applicable wood products shall be readily available at the job site and be provided to the field inspector for verification. (5.504.4.5)
25. 80% of the total area receiving new resilient flooring shall comply with one or more of the following:
    a. VOC emission limits defined in the CHPS High Performance Products Database
    b. Certified under UL GREENGUARD Gold
    c. Certification under the Resilient Floor Covering Institute (RFCI) FloorScore program
    d. Meet the California Department of Public Health's Specification 01350 (5.504.4.6)
26. Mechanically ventilated buildings shall have air filter with a Minimum Efficiency Reporting Value (MERV) of 8 or higher. However, buildings within 1,000 feet of a freeway shall provide regularly occupied areas of the building with a MERV 13 filter. Filters shall be installed prior to occupancy and recommendations for maintenance with filters of the same value shall be included in the operation and maintenance manual. (5.504.5.3)
27. Designated outdoor smoking area shall be at least 25 feet from an outdoor air intake or operable windows. (5.504.7)
28. Ventilated spaces in buildings shall meet the minimum requirements of Section 121 of the California Energy Code and Chapter 4 of the California Code of Regulations, Title 8. (5.506.1)
29. Buildings that use Demand Control Ventilation shall have CO_2 sensors and ventilation controls installed in accordance with the requirements of the current edition of the California Energy Code, CCR, Title 24, Part 6, Section 121(c). (5.506.2)
30. The HVAC, refrigeration, and fire suppression equipment shall not contain CFC or Halons. (5.508.1.)
31. Retail food stores of 8,000 sq. ft. or more of conditioned area that have a commercial refrigeration system with a global warming potential (GWP) of 150 or greater shall have leak reduction measures in accordance with LAGBC Section 5.508.2. Separate mechanical plan check is required. (5.508.2)

As a covered entity under Title II of the Americans with Disabilities Act, the City of Los Angeles does not discriminate on the basis of disability and, upon request, will provide reasonable accommodation to ensure equal access to its programs, services and activities.

PLUMBING FIXTURE FLOW RATES
Non-Residential Occupancies
2017 Los Angeles Green Building Code
(Incorporate this form into the plans)

FORM GRN 17

SECTION 5.303.2
WATER REDUCTION FIXTURE FLOW RATES

FIXTURE TYPE	MAXIMUM ALLOWABLE FLOW RATE
Showerheads	1.8 gpm @ 80 psi
Lavatory faucets, residential	1.2 gpm @ 60 psi[1,3]
Lavatory Faucets, nonresidential	0.4 gpm @ 60 psi[1,3]
Kitchen faucets	1.5 gpm @ 60 psi[2,4,5]
Wash fountains	1.8 gpm for every 20 in. of rim space @60 psi
Metering faucets	0.2 gallons/cycle
Metering faucets for wash fountains	0.2 gpm for every 20 in. of rim space @ 60 psi
Gravity tank type water closets	1.28 gallons/flush[6]
Flushometer tank water closets	1.28 gallons/flush[6]
Flushometer valve water closets	1.28 gallons/flush
Urinals	0.125 gallons/flush
Clothes Washers	ENERGY-STAR certified
Dishwashers	ENERGY-STAR certified

[1] Lavatory faucets shall not have a flow rate less than 0.8 gpm at 20 psi.
[2] Kitchen faucets may temporarily increase flow above the maximum rate, but not above 2.2gpm @ 60psi and must default to a maximum flow rate of 1.8 gpm @ 60psi.
[3] Where complying faucets are unavailable, aerators or other means may be used to achieve reduction.
[4] Kitchen faucets with a maximum 1.8 gpm flow rate may be installed in buildings that have water closets with a maximum flush rate of 1.06 gallons/flush installed throughout
[5] This requirement does not apply to faucets in commercial kitchens.
[6] Includes single and dual flush water closets with an effective flush of 1.28 gallons or less.
Single Flush Toilets - The effective flush volume shall not exceed 1.28 gallons (4.8 liters). The effective flush volume is the average flush volume when tested in accordance with ASME A112.19.233.2.
Dual Flush Toilets - The effective flush volume shall not exceed 1.28 gallons (4.8 liters). The effective flush volume is defined as the composite, average flush volume of two reduced flushes and one full flush. Flush volumes will be tested in accordance with ASME A112.19.2 and ASME A112.19.14.

As a covered entity under Title II of the Americans with Disabilities Act, the City of Los Angeles does not discriminate on the basis of disability and, upon request, will provide reasonable accommodation to ensure equal access to its programs, services and activities.

WATER CONSERVATION ORDINANCE NOTES
NON-RESIDENTIAL BUILDINGS

2017 Los Angeles Green Building Code

FORM GRN 18N

1. For new buildings or additions exceeding 50,000 ft^2, install a separate water meter or sub-meter for the following areas:
   A. For each individual leased, rented, or other tenant space within the building projected to consume more than 100 gpd (380 L/day).
   B. Where potable water is used for industrial/process uses, for water supplied to the following subsystems:
      a. Makeup water for cooling towers where flow through is greater than 500 gpm (30 L/s).
      b. Makeup water for evaporative coolers greater than 6 gpm (0.04 L/s).
      c. Steam and hot-water boilers with energy input more than 500,000 Btu/h (147 kW).
   C. For each building that uses more than 100 gpd on a parcel containing multiple buildings. (5.303.1.1)
2. Provide a 20% reduction in the overall potable water use for each building. The reduction shall be based on the maximum allowable water use per plumbing fixture and fittings as required by the Los Angeles Plumbing Code. New projects having a water supply of 2"or less and additions and alterations projects may use the prescriptive method outlined in this section. (5.303.2)
3. A water budget for landscape irrigation use that conforms to the California Department of Water Resources' Model Water Efficient Landscape Ordinance (MWELO) is required for new landscape areas of 500 sqft or more. The following methods to reduce potable water use in landscape areas include, but are not limited to, use of captured rainwater, recycled water, graywater, or water treated for irrigation purposes and conveyed by a water district or public entity. (5.304.1, 5.304.2)
4. New buildings on a site with 1,000 square feet or more of cumulative landscape area shall have separate meters or submeters for outdoor water use. (5.304.4)
5. Additions and alterations on a site with 1,000 square feet of cumulative landscape area which require water service upgrade shall have separate meters or submeters for outdoor water use. (5.304.4)
6. Locks shall be installed on all publicly accessible exterior faucets and hose bibs. (5.304.5)
7. Except as provided in this section, for sites with over 500 square feet of landscape area, alternate waste piping shall be installed to permit discharge from the clothes washer, bathtub, showers, and bathroom/restrooms wash basins to be used for a future graywater irrigation system (5.305.1)
8. Except as provided in this section, where City-recycled water is available within 200 feet of the property line, water closets, urinals, floor drains, and process cooling and heating in the building shall be supplied from recycled water and shall be installed in accordance with the Los Angeles Plumbing Code. (5.305.2)
9. Cooling towers shall comply with one of the following:
   A. Shall have a minimum of 6 cycles of concentration (blowdown)
   B. A minimum of 50% of the makeup water supply to the cooling towers shall come from non-potable water sources, including treated backwash. (5.305.3)
10. Develop and construct a system for onsite reuse of the groundwater where groundwater is being extracted and discharged. Alternatively, the groundwater may be discharged to the sewer. (5.305.4)
11. Provide a hot water system complying with one of the following:
    A. The hot water system shall not allow more than 0.6 gallons of water to be delivered to any fixture before hot water arrives.
    B. Where a hot water recirculation or electric resistance heat trace wire system is installed, the branch from the recirculating loop or electric resistance heat trace wire to the fixture shall contain a maximum of 0.6 gallons. (Los Angeles Plumbing Code Section 610.4.1)

As a covered entity under Title II of the Americans with Disabilities Act, the City of Los Angeles does not discriminate on the basis of disability and, upon request, will provide reasonable accommodation to ensure equal access to its programs, services and activities.

BUREAU OF ENGINEERING
OFFICIAL RECORD

ENGINEERING
CITY OF LOS ANGELES

DEPARTMENT OF PUBLIC WORKS
BUREAU OF ENGINEERING

NO.	REVISION DESCRIPTION	DATE	BY

BUILDING NO. -
INDEX NO. RP-300106

LICENSED ARCHITECT TED ALLEN No. C 23333 REGISTERED STATE OF CALIFORNIA

		DATE:
CITY ENGINEER		
ARCHITECTURAL DIVISION	LIC. NO.: C 23333	1-24-2019
ARCHITECT: ROBERT LOMELIN		1-24-2019
DESIGNED BY: Z. AKHTER, M. CHAVARRIA, A. KIM, M. LAM		1-24-2019
DRAWN BY: Z. AKHTER, M. CHAVARRIA, A. KIM		1-24-2019
CHECKED BY: ROBERT LOMELIN		1-24-2019
APPROVED BY:MAHMOOD KARIMZADEH,AIA, DEPUTY CITY ENGINEER		1-24-2019

CITY OF LOS ANGELES
CLIENT: DEPARTMENT OF RECREATION AND PARKS
GENERAL MANAGER: MICHAEL A. SHULL

TED ALLEN, PE

SHEET TITLE: GREEN BUILDING CODES AND FORMS

PROJECT: STUDIO CITY RECREATION CENTER

ADDRESS: 12621 RYE STREET, STUDIO CITY, CA 91604

WORK ORDER NO. E170267B
PLAN FILE NO. 860
DRAWING NO. G003
SHEET 3 OF SHEETS 211

PLOTTED:7/1/2019 11:33:52 AM

THE CITY OF LOS ANGELES OR ITS OFFICERS OR AGENTS SHALL NOT BE RESPONSIBLE FOR THE ACCURACY OR COMPLETENESS OF ELECTRONIC COPIES OF THIS PLAN SHEET.

FILE PATH: A360://Studio City Recreation Center/SCRC-Project Model_Central_Final.rvt

SHEET ISSUE DATE:03/22/12

REVISION DATES: (DESIGN STAGE ONLY)

Owner's Project Requirements (OPR) Compliance Form

FORM GRN 20

2017 Los Angeles Green Building Code and 2016 California Energy Code

COMPLETE AND INCORPORATE THIS FORM INTO THE PLANS

Project Address: 12621 Rye Street, Studio City CA, 91604 Permit Number: 17010 - 10000 - 04080

ITEM #	OPR ITEMS	PAGE NUMBER IN OPR DOCUMENT
	PROJECT PROGRAM	
1	General building information (size, stories, construction type, occupancy type and number)	5
2	Intended uses and schedules	7
3	Future expandability and flexibility of spaces	6
4	Quality and/or durability of materials and desired building lifespan	6
5	Budget or operation constraints	6
	ENVIRONMENTAL AND SUSTAINABILITY GOALS	
6	Level of compliance with the Los Angeles Green Building Code: Mandatory, Tier 1, or Tier 2	8
7	Specific environmental or sustainability goals (e.g. water efficiency, water reuse, CO_2 monitoring, xeriscaping, etc.)	8
	ENERGY EFFICIENCY GOALS	
8	Overall efficiency of building: meet California Energy Code or exceed by (%)	8, 11
9	Lighting system efficiency: meet California Energy Code or exceed by (%)	8, 30-35
10	HVAC equipment efficiency and characteristics	9, 12 To 18
11	Other measures affecting energy efficiency desired by owner (e.g. building orientation, shading, envelope and fenestration, roof, renewable power, net-zero energy use, etc.)	5, 11, 20, 21, 35 To 37
	INDOOR ENVIRONMENTAL QUALITY REQUIREMENTS	
12	Lighting	30 To 35
13	Temperature and Humidity	5, 9 & 10
14	Acoustics	12
15	Air quality, ventilation, and filtration	4, 8, 11, 19 & 20
16	Desired adjustability of system controls	18 & 19
17	Accommodations for after-hours use	18 & 19
18	Other owner requirements (e.g. natural ventilation, daylight, views, etc.)	13 To 15, 17 & 18

As a covered entity under Title II of the Americans with Disabilities Act, the City of Los Angeles does not discriminate on the basis of disability and, upon request, will provide reasonable accommodation to ensure equal access to its programs, services and activities.

	EQUIPMENT AND SYSTEMS EXPECTATIONS	
19	Level of quality, reliability, equipment type, flexibility, maintenance, and complexity desired	6, 11 to 19
20	Specific efficiency targets, desired technologies, or preferred manufacturers for building systems, acoustics and vibration	8, 9, 12 to 20
21	Degree of system integration, automation, and functionality for controls (i.e. load shedding, demand response, energy management)	18, 19
	BUILDING OCCUPANT AND O&M PERSONNEL EXPECTATIONS	
22	Description of how the building will be operated and by whom	6
23	Level of training and orientation required to understand, operate and use the building systems for building operation and maintenance staff, as well as occupants	6
24	Building operation and maintenance staff location and capabilities	6
	COMMISSIONING AGENT INFORMATION	
25	Name of Commissioning Agency: Maroko & Shwe, Inc.	
26	Address of Agency: 1106-B W. Magnolia Blvd., Burbank, CA 91506	
27	Contact person(s) Name(s): James H. Shwe	

Owner/Owner Representative Acknowledgement

Owner's Project Requirements (OPR). The expectations and requirements of the building appropriate to its phase shall be documented before the design phase of the project begins. The OPR includes the elements listed above and have been approved by the Owner or Owner Representative.

Name: _____ ☐ Owner ☐ Owner Representative

Company Name (if applicable): _____

Signature: _____ Date: _____

As a covered entity under Title II of the Americans with Disabilities Act, the City of Los Angeles does not discriminate on the basis of disability and, upon request, will provide reasonable accommodation to ensure equal access to its programs, services and activities.

Basis of Design (BOD) Compliance Form

FORM GRN 21

2017 Los Angeles Green Building Code and 2016 California Energy Code

COMPLETE AND INCORPORATE THIS FORM INTO THE PLANS

Project Address: 12621 Rye Street, Studio City CA, 91604 Permit Number: 17010 - 10000 - 04080

ITEM #	BOD ITEMS	PAGE NUMBER IN BOD DOCUMENT
	HVAC SYSTEMS AND CONTROLS	
1	Narrative description of system (i.e. system type(s), location, control type, efficiency features, outdoor air ventilation strategy, indoor air quality features, noise reduction features, environmental benefits, other features)	2, 3, 4
2	Description of how the system meets requirements in OPR	1 to 14
3	Reasons for system selection, as opposed to alternatives (e.g. comfort performance, efficiency, reliability, cost, acoustics, etc.)	4
4	Load calculations (i.e. method/software, summer outdoor conditions, winter outdoor conditions, indoor design conditions, assumptions, other)	1, 2 & 13
5	Sequence of Operations (i.e. operating schedules, setpoints, other)	7 & 11
	INDOOR LIGHTING SYSTEM	
6	Narrative Description of system (e.g. fixture type(s), lamp & ballast type, control type, etc.)	25, 26
7	Description of how the system meets requirements in OPR	24, 25, 26
8	Reasons for system selection, as opposed to alternatives (e.g. visual comfort performance, efficiency, reliability, flexibility, simplicity, cost, etc.)	24
9	Lighting Design Criteria (i.e. space ID, space type, illumination design target, source of target, light calculation assumptions, other)	24, 25, 26
10	Lighting Power Design Target (i.e. space type, Title 24-Energy Code lighting power allowance, lighting power design target, other)	24, 25, 26
	WATER HEATING SYSTEM	
11	Narrative description of system (i.e. system type, location, control type, efficiency features, environmental benefits, other)	16, 17
12	Description of how the system meets requirements in OPR	15 to 20
13	Reasons for system selection, as opposed to alternatives (e.g. performance, efficiency, reliability, space constraints, cost, ease of maintenance, other)	15, 19, 20
14	Water heating load calculations: sizing calculation method, assumptions, and results	17
	LANDSCAPE IRRIGATION SYSTEMS	
15	Narrative description of system (i.e. system type(s), location, control type, performance, efficiency, water savings, other)	31
16	Description of how the system meets requirements in OPR	32
17	Reasons for system selection, as opposed to alternatives (e.g. performance, efficiency, reliability, flexibility, cost, utility company incentives, other)	31, 33
18	Landscape irrigation system calculations: sizing calculation method, assumptions, and results	33
	COVERED PROCESSES	
19	Narrative description of system (i.e. system type(s), location, control type, performance, efficiency, savings, other)	N/A
20	Description of how the system meets requirements in OPR	N/A
21	Reasons for system selection, as opposed to alternatives (e.g. performance, efficiency, reliability, flexibility, simplicity, expandability, cost, payback period, utility company incentives, owner preference, etc.)	N/A
22	Sequence of Operation (e.g. operating schedules, setpoints, storage capacity, etc...)	N/A
	RENEWABLE ENERGY SYSTEMS (IF ANY)	
23	Narrative description of system (i.e. system type(s), location, inverter type, control type, performance, efficiency, energy savings, payback period, other)	24, 25
24	Description of how the system meets requirements listed in OPR	24, 25
25	Reasons for system selection, as opposed to alternatives (e.g. performance, efficiency, reliability, flexibility, simplicity, expandability, cost, payback period, etc.)	24, 25
26	Renewable energy system generation calculations: sizing calculation method, assumptions, and results	24, 25
	WATER REUSE SYSTEM (IF ANY)	
27	Narrative description of system (i.e. system type(s), location, space requirements, equipment requirements, control type, performance, efficiency, potable water savings, payback period, other)	N/A
28	Description of how the system meets requirements in OPR	N/A
29	Reasons for system selection, as opposed to alternatives (e.g. performance, efficiency, reliability, flexibility, simplicity, cost, payback period, etc.)	N/A
30	Water reuse system calculations: sizing calculation method, assumptions, and results	N/A

Architect/Engineer/Designer Acknowledgement

I hereby acknowledge the Basis of Design (BOD) document has been completed and meets the Owner's Project Requirements (OPR).

	Name	License Number	Signature	Date
Architect of Record	Robert Lomelin			
Mechanical Designer	James H. Shwe	M 26903	James H. Shwe	
Electrical Designer	Felix Roth	E 012941	Felix Roth	
Plumbing Designer	James H. Shwe	M 26903	James H. Shwe	
Landscape Architect	Greg Moser			
Renewable Energy System Designer				
Others (specify):				

As a covered entity under Title II of the Americans with Disabilities Act, the City of Los Angeles does not discriminate on the basis of disability and, upon request, will provide reasonable accommodation to ensure equal access to its programs, services and activities.

Commissioning Measures In Construction Documents

FORM GRN 22

2017 Los Angeles Green Building Code and 2016 California Energy Code

COMPLETE AND INCORPORATE THIS FORM INTO THE PLANS

Project Address: 12621 Rye Street, Studio City CA, 91604 Permit Number: 17010-10000-04080

ITEM #	Commissioning Measures Items
1	Measures shown in the specifications and cross referenced
2	List of commissioned equipment and systems
3	Cx roles and responsibilities of all parties
4	Meeting requirements
5	Commissioning schedule management procedures
6	Procedures for addressing outstanding issues or non-compliance
7	Requirements for execution and documentation of installation and equipment start up
8	Specific testing requirements for each system type
9	Submittal review and approval requirements
10	Contents and approval process of the commissioning plan
11	Cx documentation and reporting requirements
12	Facility staff training requirements and verification procedures
13	O & M manual review and approval procedures
14	Systems manual development and approval procedures
15	Definitions

Commissioning Agent Acknowledgment

I have reviewed the applicable construction documents listed above and verified their compliance with the owner's project requirements, basis of design, and commissioning plan.

Name: James H. Shwe

Company Name (if applicable): Maroko & Shwe, Inc.

Agent's signature: James H. Shwe Date: _____

As a covered entity under Title II of the Americans with Disabilities Act, the City of Los Angeles does not discriminate on the basis of disability and, upon request, will provide reasonable accommodation to ensure equal access to its programs, services and activities.

Commissioning Plan Compliance Form

FORM GRN 23

2017 Los Angeles Green Building Code and 2016 California Energy Code

COMPLETE AND INCORPORATE THIS FORM INTO THE PLANS

Project Address: 12621 Rye Street, Studio City CA, 91604 Permit Number: 17010 - 10000 - 04080

ITEM #	COMMISSIONING PLAN ITEMS	PAGE NUMBER IN COMMISSIONING PLAN DOCUMENT
	GENERAL PROJECT INFORMATION	
1	Project name, owner, location, building type and building area	1
2	Definitions	1
3	Overall project commissioning schedule	9, 10
4	Contact information for individual/company providing commissioning services	3
	COMMISSIONING GOALS	
5	Meeting the Los Angeles Green Building code and California Energy Code requirements for commissioning	1, 2
6	Meeting OPR and BOD requirements	1, 2
7	Carrying out requirements for commissioning activities as specified in plans and specifications	4
	SYSTEMS TO BE COMMISSIONED	
8	Explanation of the original design intent (refer to OPR and BOD documents)	2
9	Requirements for execution and documentation of installation, checkout and start up, including controls point-to-point checks and calibrations	6, 7
10	Equipment and systems to be tested*, functions and modes to be tested, conditions under which the test shall be performed, measurable criteria for acceptable performance, and example test forms	2, 11, 12
	COMMISIONING TEAM INFORMATION	
11	List of all team members and contact information (i.e. owner, owner's representative, architect, engineers, designated commissioning representative, and (if available): general contractor, sub-contractors, vendors, and construction manager)	3
	COMMISSIONING PROCESS ACTIVITIES, SCHEDULES, AND RESPONSIBILITIES	
12	Prescribed commissioning process steps and activities to be accomplished by the Cx team throughout the design to occupancy	5
13	Roles and responsibilities for each member of the Cx team for each phase of the work (including who writes checklists and tests, who reviews and approves test forms, who directs tests, who executes tests, who documents tests results and who approves completed tests)	4
14	Required Cx deliverables, reports, forms, and verifications expected at each stage of the commissioning effort	10
15	Confirmation, development and approval process for the O&M manual, systems manual and the facility operator and maintenance staff training	8

At a minimum, the following systems shall be tested: HVAC & controls, indoor lighting system & controls, water heating system, landscape irrigation systems, covered processes, renewable energy systems, and water reuse systems.

Owner/Owner Representative Acknowledgement

The commissioning plan includes the items listed above and have been approved by the Owner or Owner Representative:

Name: _____ ☐ Owner ☐ Owner Representative

Company Name (if applicable): _____

Signature: _____ Date: _____

As a covered entity under Title II of the Americans with Disabilities Act, the City of Los Angeles does not discriminate on the basis of disability and, upon request, will provide reasonable accommodation to ensure equal access to its programs, services and activities.

As a covered entity under Title II of the Americans with Disabilities Act, the City of Los Angeles does not discriminate on the basis of disability and, upon request, will provide reasonable accommodation to ensure equal access to its programs, services and activities.

As a covered entity under Title II of the Americans with Disabilities Act, the City of Los Angeles does not discriminate on the basis of disability and, upon request, will provide reasonable accommodation to ensure equal access to its programs, services and activities.

BUREAU OF ENGINEERING

OFFICIAL RECORD

ENGINEERING
CITY OF LOS ANGELES

BUILDING NO. -

NO.	REVISION DESCRIPTION	DATE	BY

INDEX NO. **RP-300106**

LICENSED ARCHITECT TED ALLEN LOMELIN C-26903 REGISTRATION EXPIRES 08-31-2019 STATE OF CALIFORNIA

DEPARTMENT OF PUBLIC WORKS
BUREAU OF ENGINEERING
CITY OF LOS ANGELES

CITY ENGINEER		
DATE:		1-24-2019
ARCHITECTURAL DIVISION	LIC. NO.: C 23333	1-24-2019
ARCHITECT: ROBERT LOMELIN		1-24-2019
DESIGNED BY: Z. AKHTER, M. CHAVARRIA, A. KIM, M. LAM		
DRAWN BY: Z. AKHTER, M. CHAVARRIA, A. KIM		
CHECKED BY: ROBERT LOMELIN		1-24-2019
APPROVED BY: MAHMOOD KARIMZADEH, AIA, DEPUTY CITY ENGINEER		1-24-2019

TED ALLEN, PE

CLIENT: DEPARTMENT OF RECREATION AND PARKS
GENERAL MANAGER: MICHAEL A. SHULL

SHEET TITLE: GREEN BUILDING CODES AND FORMS

PROJECT: STUDIO CITY RECREATION CENTER

ADDRESS: 12621 RYE STREET, STUDIO CITY, CA 91604

WORK ORDER NO. E170267B

PLAN FILE NO. 860

DRAWING NO. G004

SHEET 4 OF SHEETS 211

PLOTTED: 7/1/2019 11:33:54 AM

THE CITY OF LOS ANGELES OR ITS OFFICERS OR AGENTS SHALL NOT BE RESPONSIBLE FOR THE ACCURACY OR COMPLETENESS OF ELECTRONIC COPIES OF THIS PLAN SHEET.

FILE PATH: A360://Studio City Recreation Center/SCRC-Project Model_Central_Final.rvt

SHEET ISSUE DATE: 02/10/16

REVISION DATES (DESIGN STAGE ONLY)

Functional Performance Testing Compliance Form

2017 Los Angeles Green Building Code and 2016 California Energy Code

FORM GRN 24

THIS FORM IS TO BE COMPLETED PRIOR TO FINAL INSPECTION

Project Address: 12621 Rye Street, Studio City CA, 91604 Permit Number: 17010 - 10000 - 04080

List the functional test reports below for all systems to be tested (see Form GRN 23, item #10)

REPORT # (e.g. FPT-003)	SYSTEM/EQUIPMENT FUNCTIONAL TESTING REPORT (See minimum report requirements on page 2 of this form)	PAGE/TAB # IN COMMISSIONING REPORT

As a covered entity under Title II of the Americans with Disabilities Act, the City of Los Angeles does not discriminate on the basis of disability and, upon request, will provide reasonable accommodation to ensure equal access to its programs, services and activities.

Commissioning Agent Acknowledgment

I have reviewed the test reports listed above and verified that they are complete; these tests have been executed with deficiencies corrected.

Name: James H Shwe

Company Name (if applicable): Maroko & Shwe, Inc.

Agent's Signature: James H Shwe Date: _____

Minimum Requirements for Functional Testing Report

1. Date and Party – Identification of the date of the test and the party conducting the test.
2. Signature Block – Signature of the designated commissioning lead and the equipment installing contractor attesting that the recorded test results are accurate.
3. Prerequisites – any conditions or related equipment checkout or testing that needs to be completed before conducting this test.
4. Precautions – Identification of the risks involved to the test team members and the equipment and how to mitigate them.
5. Instrumentation – Listing of the instrumentation and tools necessary to complete the test.
6. Reference – In each procedure item, identify the source for what is being confirmed (e.g. sequence of operation ID, operating feature, specification requirement, etc.)
7. Test Instructions – Step-by-step instructions of how to complete the test, including functions to test and the conditions under which the tests should be performed. Testing should include verification of proper operation of all equipment features, each part of the sequence of operation, overrides, lockouts, safeties, alarms, occupied and occupied modes, loss of normal power, exercising shutdown, startup, low load though full load (as much as possible) and back, staging and by functions, scheduling, energy efficiency strategies and loop tuning, and any other applicable Title 24 Acceptance Requirements.
8. Acceptance Criteria – Measurable pass/fail criteria for each step of the test, as applicable.
9. Results – Expected system response and space to document the actual response, readings, results, and adjustments.
10. Return to Normal – Instructions that all systems and equipment are to be returned to their as-found state at the conclusion of the tests.
11. Deficiencies – A list of deficiencies and how they were mitigated.

As a covered entity under Title II of the Americans with Disabilities Act, the City of Los Angeles does not discriminate on the basis of disability and, upon request, will provide reasonable accommodation to ensure equal access to its programs, services and activities.

Documentation & Training Compliance Form

2017 Los Angeles Green Building Code

FORM GRN 25

THIS FORM IS TO BE COMPLETED PRIOR TO FINAL INSPECTION

Project Address: 12621 Rye Street, Studio City CA, 91604 Permit Number: 17010 - 10000 - 04080

Part One: Documentation

ITEM #	SYSTEM MANUAL ELEMENTS	PAGE NUMBER IN MANUAL
	SITE INFORMATION	
1	General (i.e. address, acreage, local utility information, other)	
2	Facility description (i.e. use/function, square footage, occupancy type, construction type, basis of design, location of major systems & equipment)	
3	Project history (i.e. project requirements (BOD/OPR), project undocumented events, record drawings & documents, final control drawings and schematics, final control sequences, construction documents)	
4	Current requirements (i.e. building operating schedules, space temperature, humidity, pressure, CO_2 setpoints, summer and winter setback schedules, chilled and hot water temperatures, as-built control setpoints & parameters)	
	SITE CONTACT INFORMATION	
5	Owner Information	
6	Emergency contacts	
7	Design Team (i.e. architect, mechanical engineer, electrical engineer, other)	
8	Prime Contractor contact information	
9	Subcontractor information	
10	Equipment supplier contact information	
	BASIC OPERATIONS & MAINTENANCE	
11	Basic operation (i.e. narratives of basic equipment operation, interfaces, interlocks & interaction with other equipment & systems, initial maintenance provided by the contractor)	
12	General site operating schedules (i.e. instructions for changes in major system operating schedules, instructions for changes in major system holiday & weekend schedules)	
13	Basic troubleshooting (i.e. cite recommended troubleshooting procedures specific to major systems & equipment, manual operation procedures, standby/backup/bypass operation procedures, major system power fail resets and restarts, trend log listing)	
14	Recommended maintenance events log (i.e. HVAC air filter replacement schedule & log, building control system sensor calibration schedule & log)	
15	Operation & maintenance manuals (location or delivery information)	
	MAJOR SYSTEMS	
16	HVAC systems & controls (i.e. AC equipment, heating equipment, air distribution equipment, ventilation equipment, building automation system)	
17	Indoor lighting systems & controls (i.e. lighting control panels, occupancy sensors, daylight harvesting systems)	
18	Renewable energy systems (i.e. photovoltaic panels & inverters, wind powered electrical generators & inverters)	
19	Landscape irrigation systems (i.e. water distribution diagrams, and control system)	
20	Water reuse systems (i.e. reclaimed water system for indoor use, reclaimed water for irrigation use)	
	SITE EQUIPMENT INVENTORY & MAINTENANCE NOTES	
21	Spare parts inventory	
22	Frequently required parts and supplies	
23	Special equipment required to operate or maintain systems	
24	Special tools required to operate or maintain systems	
	SPECIAL INSPECTIONS	
25	Copies of any special inspection verifications pertaining to systems being commissioned	
	OTHER	
26	Other resources and documentation	

Part Two: Training

ITEM #	TRAINING PROGRAM ELEMENTS	PAGE NUMBER IN TRAINING DOCUMENT
1	System/equipment overview (i.e. what it is, what it does, and with what other systems and/or equipment it interfaces)	
2	Review and demonstration of servicing & preventative maintenance	
3	Review of the information in the Systems Manual	
4	Review of the record drawings on the system/equipment	

Owner/Owner Representative Acknowledgement

☐ Documentation of the operational aspects of the building shall be completed within the systems manual and delivered to the building owner or representative and facilities operator. The Systems Manual includes the elements listed in part one of this form.

☐ When the appropriate maintenance staff is made available prior to the certificate of occupancy, the written training program will be executed to these staff. The written training program includes the elements listed in part two of this form.

Name: _____ Company Name (if applicable): _____

Signature: _____ ☐ Owner ☐ Owner Representative

Date: _____

As a covered entity under Title II of the Americans with Disabilities Act, the City of Los Angeles does not discriminate on the basis of disability and, upon request, will provide reasonable accommodation to ensure equal access to its programs, services and activities.

Commissioning Report Compliance Form

2017 Los Angeles Green Building Code

FORM GRN 26

THIS FORM IS TO BE COMPLETED PRIOR TO FINAL INSPECTION

Project Address: _____ Permit Number: _____ - _____ - _____

ITEM #	COMMISSIONING REPORT ELEMENTS	PAGE NUMBER IN COMMISSIONING REPORT DOCUMENT
	EXECUTIVE SUMMARY	
1	Executive summary of process and results of commissioning program (include observations, conclusions, and any outstanding items)	
	HISTORY OF ANY SYSTEM DEFICIENCIES AND HOW RESOLVED	
2	Outstanding deficiencies and plans for resolution	
3	Plans for seasonal testing scheduled for a later date	
	RESULTS	
4	System performance test results and evaluations	
	SUMMARY OF TRAINING	
5	Summary of training process completed and scheduled	
	ATTACH COMMISSIONING PROCESS DOCUMENTS	
6	Commissioning Plan	
7	Owner's Project Requirements (OPR)	
8	Basis of Design (BOD)	
9	Executed installation checklists	
10	Executed Functional Performance Test (FPT) forms	
11	Recommendations for end-of-warranty review activities	

Owner & Commissioning Agent Acknowledgment

The commissioning report includes the items listed above and is approved by the owner/owner representative and commissioning agent below.

1. *Owner/Owner Representative*

The commissioning report includes the items listed above and have been approved by the Owner or Owner Representative.

Name: _____ ☐ Owner ☐ Owner Representative

Company Name (if applicable): _____

Signature: _____ Date: _____

2. *Commissioning Agent*

Name: _____

Company Name (if applicable: _____

Signature: _____ Date: _____

As a covered entity under Title II of the Americans with Disabilities Act, the City of Los Angeles does not discriminate on the basis of disability and, upon request, will provide reasonable accommodation to ensure equal access to its programs, services and activities.

TESTING & ADJUSTING

- ***HVAC SYSTEM DESCRIPTION***

1. PACKAGED ROOFTOP AIR CONDITIONING UNIT WITH GAS HEATING
2. VARIABLE SPEED INDOOR FANS
3. 100% OUTDOOR AIR ECONOMIZERS
4. DEMAND CONTROLLED VENTILATION
5. VARIABLE AIR FLOW TERMINALS FOR ZONE CONTROLS; MAJORITY WITH NO REHEAT; ELECTRIC REHEAT FOR TWO CRITICAL ZONES; ZONE THERMOSTATS MODULATE SUPPLY AIR FLOW RATE DURING COOLING; WHEN (1) AIR FLOW IS MINIMUM AT ONE ZONE, (2) THE TEMPERATURE OF THIS ZONE IS BELOW HEATING SET POINT, (3) OUTDOOR AIR DAMPER IS AT OR BELOW MINIMUM SETTING AND (4) TEMPERATURE IS BELOW COOLING SET POINT AT ALL ZONES BY A SET DIFFERENTIAL , ACTIVATE GAS HEATING
6. EXHAUST FANS FOR RESTROOMS, TOILETS, LOCKERS & ELECTRICAL ROOMS.
7. SPLIT SYSTEM COOLING ONLY UNIT WITH DUCTLESS FAN COIL FOR COMPUTER ROOM

TESTING, ADJUSTING, BALANCING & CERTIFICATION

HVAC SYSTEM WILL BE INSPECTED, TESTED AND CERTIFIED FOR ACCEPTANCE PER 2013 CALIFORNIA ENERGY CODE SECTION 120.5, REQUIRED NONRESIDENTIAL MECHANICAL SYSTEM ACCEPTANCE & SECTION 120.8 BUILDING COMMISSIONING. SPECIFICATION SECTIONS 230800 & 230802 REFERENCING THE AABC NATIONAL STANDARDS ARE PROVIDED AS PART OF THE CONSTRUCTION DOCUMENT PACKAGE.

- ***INDOOR LIGHTING AND CONTROLS***

1. ALL INDOOR LIGHTING FIXTURES ARE LED TYPE FIXTURES WITH DIMMING CAPABILITIES THAT ARE EQUIPPED WITH CONTROLS THAT MEET THE APPLICABLE SHUT-OFF CONTROL REQUIREMENTS PER 2013 TITLE 24 SECTION 130.1 (C). EQUIPMENT TO BE USED TO COMPLY WITH THIS REQUIREMENT ARE OCCUPANCY SENSOR, PHOTOSENSOR AND MANUAL ON-OFF SWITCHES.
2. EACH ROOM AREA THAT IS 100 SQUARE FEET OR LARGER WITH A CONNECTED LIGHTING LOAD THAT EXCEEDS 0.5 WATTS PER SQUARE THAT SHALL MEET THE MULTI-LEVEL LIGHTING REQUIREMENTS PER 2013 TITLE 24 SECTION 130.1 (B).
3. LIGHTING IN ALL DAYLIGHT ZONES SHALL BE CONTROLLED BY PHOTOSENSOR IN ACCORDANCE WITH THE REQUIREMENTS OF 2013 TITLE 24 SECTION 130.1 (D).
4. IN ADDITION TO ALL THE AUTOMATIC DIMMING CONTROLS, ALL FIXTURES SHALL ALSO BE CONTROLLED WITH MANUALLY SWITCH ON AND CONTROLS IN ACCORDANCE WITH 2013 TITLE 24 SECTION 130.1(A).

- ***OUTDOOR LIGHTING AND CONTROLS***

1. ALL OUTDOOR LIGHTING FIXTURES ARE LED TYPE FIXTURES WITH DIMMING CAPABILITIES AND SOME ARE WITH BUILT-IN PHOTO SENSOR. ALL EXTERIOR LUMINAIRES SHALL BE BOTH CONTROLLED BY PHOTO CONTROL DEVICE AND BY AN AUTOMATIC SCHEDULING CONTROL EQUIPPED WITH ASTRONOMICAL FEATURES.
2. OUTDOOR LUMINAIRES THAT ARE MOUNTED LESS THAN 24 FEET AND MORE 75W IF POLE MOUNTED AND MORE THAN 30W IF WALL MOUNTED SHALL HAVE BUILT-IN PHOTOSENSOR TO COMPLY WITH 2013 TITLE 24 SECTION 130.2 (C).
3. ALL OUTDOOR LUMINAIRES ARE CIRCUITED INDEPENDENTLY PER AREA OR GROUP AND ARE INDEPENDENTLY CONTROLLED.

TESTING, ADJUSTMENT AND CERTIFICATION

1. THE INDOOR AND OUTDOOR LIGHTING AND CONTROL SYSTEM WILL BE INSPECTED, TESTED AND CERTIFIED FOR ACCEPTANCE PER 2013 CALIFORNIA ENERGY CODE SECTION 130.0, 130.1 FOR INDOOR AND 130.2 FOR OUTDOOR LIGHTING RESPECTIVELY AND REQUIRED NONRESIDENTIAL ELECTRICAL SYSTEM ACCEPTANCE & BUILDING COMMISSIONING.

- ***WATER HEATING SYSTEM DESCRIPTION***

1. GAS FIRED DIRECT VENT WATER HEATER WITH INTEGRAL STORAGE TANK; SEALED COMBUSTION WITH BOTH COMBUSTION AIR AND COMBUSTION PRODUCTS PIPED DIRECTLY OUTDOORS; INTEGRAL CONTROLS
2. PUMPED RECIRCULATION SYSTEM CONTROLLED BY AQUASTAT ON THE RETURN LINE AND ENABLED BY 365 DAY TIME CLOCK

TESTING & CERTIFICATION

THE WATER HEATING SYSTEM WILL BE INSPECTED, TESTED AND CERTIFIED FOR ACCEPTANCE PER 2013 CALIFORNIA ENERGY CODE SECTION 110.3, MANDATORY REQUIREMENTS FOR SERVICE WATER HEATING AND EQUIPMENT & SECTION 120.8 BUILDING COMMISSIONING.

- ***RENEWABLE ENERGY SYSTEMS***

1. SOLAR PANELS ARE MADE OF MONOCRYSTALLINE MODULES THAT GIVE HIGHER EFFICIENCY AND DURABILITY.
2. COMBINER BOX WITH FUSES TO FEED STRINGS OF MODULES CONNECTED AND SERIES AND WITH BUILT-IN INTEGRATED DC DISCONNECT.
3. PHOTOVOLTAIC SOLAR INVERTERS ARE EQUIPPED WITH DC.
4. PHOTOVOLTAIC SYSTEMS ARE FIXED IN TO THE GRID SYSTEM WITH PERFORMANCE METER AND LOCKABLE TYPE FUSIBLE DISCONNECT SWITCH AND SHALL BE INSTALLED TO MEET THE REQUIREMENT OF ARTICLE 690 AND SECTION OF ARTICLE 705 OF THE N.E.C. PERTAINING TO PV SYSTEM INSTALLATION.

TESTING ADJUSTMENT AND CERTIFICATIONS

1. THE RENEWABLE ENERGY SYSTEMS (SOLAR PV SYSTEM) WILL BE INSPECTED, TESTED AND CERTIFIED FOR ACCEPTANCE PER 2013 CALIFORNIA ENERGY CODE SECTION 110.10 AND BUILDING COMMISSIONING.

BUREAU OF ENGINEERING

OFFICIAL RECORD

THE CITY OF LOS ANGELES OR ITS OFFICERS OR AGENTS SHALL NOT BE RESPONSIBLE FOR THE ACCURACY OR COMPLETENESS OF ELECTRONIC COPIES OF THIS PLAN SHEET.

FILE PATH: A360://Studio City Recreation Center/SCRC-Project Model_Central_Final.rvt

SHEET ISSUE DATE: 05/04/17

REVISION DATES: (DESIGN STAGE ONLY)

DEPARTMENT OF PUBLIC WORKS
CITY OF LOS ANGELES
BUREAU OF ENGINEERING
ENGINEERING
CITY OF LOS ANGELES

NO.	REVISION DESCRIPTION	DATE	BY

BUILDING NO. -

INDEX NO. RP-300106

CITY ENGINEER: TED ALLEN, PE — DATE: 1-24-2019

ARCHITECTURAL DIVISION — LIC. NO.: C 23333

ARCHITECT: ROBERT LOMELIN — DATE: 1-24-2019

DESIGNED BY: Z. AKHTER, M. CHAVARRIA, A. KIM, M. LAM — DATE: 1-24-2019

DRAWN BY: Z. AKHTER, M. CHAVARRIA, A KIM — DATE: 1-24-2019

CHECKED BY: ROBERT LOMELIN — DATE: 1-24-2019

APPROVED BY: MAHMOOD KARIMZADEH, AIA, DEPUTY CITY ENGINEER — DATE: 1-24-2019

LICENSED ARCHITECT ROBERT LOMELIN C-23333 REGISTRATION EXPIRES 08/31/2019 STATE OF CALIFORNIA

CLIENT: DEPARTMENT OF RECREATION AND PARKS

GENERAL MANAGER: MICHAEL A. SHULL

SHEET TITLE: GREEN BUILDING CODES AND FORMS

PROJECT: STUDIO CITY RECREATION CENTER

ADDRESS: 12621 RYE STREET, STUDIO CITY, CA 91604

WORK ORDER NO. E170267B

PLAN FILE NO. 860

DRAWING NO. G005

SHEET 5 OF SHEETS 211

PLOTTED:7/1/2019 11:33:57 AM

LEED 2009 FOR NEW CONSTRUCTION CHECKLIST

Sustainable Sites

Y	Prereq 1	**Construction Activity Pollution Prevention**	Req.
	C	Reduce pollution from construction activities by controlling soil erosion, waterway sedimentation, and airborne dust generation.	

1	Credit 1	**Site Selection**	1
	d	Do not develop on prime farmland, flood plane, habitat for endangered species, wetlands, within 50ft of lakes, rivers, etc, previous public parkland.	

5	Credit 2	**Development Density & Community Connectivity**	5
	d	Site must be previously developed AND Opt 1: Density of 60,000 sf. per acre net OR Opt 2: Residential density of 10 units per acre AND within 1/2 mile of 10 resources - bank, restaurant, P.O. etc.	

1	Credit 3	**Brownfield Redevelopment**	1
6	Credit 4.1	**Alternative Transportation** Public Transportation Access	6
	d	1/2 mile of rail/subway station OR 1/4 mile from bus stop with 2 bus lines.	

1	Credit 4.2	**Alternative Transportation** Bicycle Storage and Changing Room	1
	d	Commercial Bike racks for 5% of building users (FTE+transients) and showers for 0.5% of FTE's Residential Covered racks for 15% of Occupants.	

3	Credit 4.3	**Alternative Transportation** Low-Emitting & Fuel-Efficient Vehicles	3
	d	Opt 1: LE/FE preferred parking for 5% of parking capacity OR 20% discounted parking for LE/FE **Opt 2: Alternative fuel refueling station for 3% of parking capacity** Opt 3: LE/FE vehicles for 3% of FTE and preferred parking Opt 4: LE/FE vehicle-sharing program contract for 2 years, 1 vehicle per 3% of FTE, and preferred parking	

Y	Prereq 2	**Minimum Energy Performance**	Req.
	d	Opt 1: Whole Building Energy Simulation Demonstrate 10% (new buildings) or 5% (major renovations) improvement over 90.1-2007 or Title 24-2005 using a computer simulation model. Opt 2: Small office and retail buildings (under 20,000 sf) - comply with ASHRAE Advanced Energy Design Guide. Opt 3: Comply with Advanced Buildings Core Performance Guide. Project must be under 100,000 sf. Healthcare, warehouse and laboratory ineligible.	

Y	Prereq 3	**Fundamental Refrigerant Management**	Req.
	d	Zero use of CFC-Based refrigerants in HVAC systems. Or have phase out plan for renovation projects.	

19	Credit 1	**Optimize Energy Performance**	1 to 19
	d	One point for every 2% savings starting with: New Buildings: 1 pt = 12% and ending with 19 pts = 48% (5 pts = 20%; 10 pts = 30%; 15 pts = 40%) Renovations: 1 pt = 8% and ending with 19 pts = 44% (5 pts = 16%; 10 pts = 26%; 15 pts = 36%) See EAp2 above for compliance paths. Opt 1: 1-19 points available. Opt 2: 1 point available. Opt 3: 1-3 points available.	

7	Credit 2	**On-Site Renewable Energy**	1 to 7
	d	1% = 1 pt; 3% = 2 pts; 5% = 3 pts; 7% = 4 pts; 9% = 5 pts; 11% = 6 pts; 13% = 7 pts Use on-site energy to offset building energy cost.	

		2	Credit 3	**Enhanced Commissioning**	2
	2		Credit 4	**Enhanced Refrigerant Management**	2
1		2	Credit 5	**Measurement & Verification**	3
	C			Opt 1: Plan consistent with Option D: Calibrated Simulation (Savings Estimation Method 2), as specified in the IPMVP Volume III. Opt 2: Plan consistent with Option B: Energy Conservation Measure Isolation, as specified in the IPMVP Volume III. All Options: The M&V period shall cover a period of no less than one year of post-construction occupancy. Provide corrective action process if savings are not achieved. Option 3. Third Party Data Source (1 point) Meet MPR 6 through compliance Option 1: Energy and Water Data Release Form. Projects must register an account in ENERGY STAR's Portfolio Manager tool and share the project file with the USGBC master account.	

	2		Credit 6	**Green Power**	2
	C			Provide 35% of the buildings electricity from qualifying renewable sources for a 2 year period.	

Y	Prereq 1	**Storage & Collection of Recyclables**	Req.
	d	At a minimum: glass, plastic, paper cardboard, and metals.	

		2	Credit 1	**Building Reuse**	1 to 3
		1	Credit 1.2	**Building Reuse**	1
2			Credit 2	**Construction Waste Management**	2
	C			Divert 50% = 1 pt Divert 75% = 2 pts Recycle or salvage construction and demolition waste. Develop and implement CWM plan for project.	

		2	Credit 3	**Materials Reuse**	2
	C			5% = 1 pt 10% = 2 pts Use salvaged, refurbished or reused building materials and products to reduce demand for virgin materials.	

2			Credit 4	**Recycled Content**	2
	C			10% = 1 pt 20% = 2 pts Sum of post-consumer recycled content plus 1/2 of pre-consumer content equals 10% or 20% of the total value of the materials in the project. Percent based on total value of materials in CSI MasterFormat divisions 03-10, 31 (Foundations), 32 (Paving, Site Improvements and Planting).	

2			Credit 5	**Regional Materials**	2
	C			10% = 1 pt 20% = 2 pts Use materials that have BOTH been extracted, harvested, or recovered AND manufactured within 500 miles of project site. Percent based on total value of materials in CSI MasterFormat divisions 03-10, 31 (Foundations), 32 (Paving, Site Improvements and Planting).	

		1	Credit 6	**Rapidly Renewable Materials**	1
	C			2.5% of all materials to be made from products that can be harvested within a 10-year cycle. Percent based on total value of materials in CSI MasterFormat divisions 03-10, 31 (Foundations), 32 (Paving, Site Improvements and Planting).	

1	Credit 7	**Certified Wood**	1
C		50% of all new wood products on project must be FSC certified. Percent based on total value of new wood materials in the project. FSC Pure and FSC Mixed may be used (FSC Recycled does not count).	

Y	Prereq 1	**Minimum IAQ Performance**	Req.
	d	Mechanically Ventilated Meet minimum requirements for ASHRAE 62.1-2007 for indoor ventilation or local code if more stringent. Naturally Ventilated Comply with ASHRAE 62.1-2007, Paragraph 5.1.	

Y	Prereq 2	**Environmental Tobacco Smoke (ETS) Control**	Req.
	d	All Project Types Opt 1: Prohibit smoking in the building. Opt 2: Provide dedicated smoking rooms directly exhausted and with negative pressure. Residential/Hospitality Prohibit smoking in common areas, weather-strip exterior doors and windows, seal penetrations in units, weather-strip all doors in units to hallways, conduct blower door test, and sample air leakage. All Options: Locate exterior smoke areas 25 feet away from entries, outdoor air intakes, and operable windows.	

1	Credit 1	**Outdoor Air Delivery Monitoring**	1
	d	Mechanically Ventilated Monitor CO2 in all spaces with occupant density of 25 people per 1,000 s.f. between 3 and 6 feet above the floor. For non-densely occupied space, provide direct air flow measurement device capable of measuring the minimum outdoor airflow rate within 15% of the minimum outdoor air rate, as defined by ASHRAE 62.1-2007. Naturally Ventilated Monitor CO2 in all naturally ventilated spaces, between 3 and 6 feet above the floor. All Options: Install permanent monitoring systems and configure to generate alarms when CO2 levels vary by 10% or more.	

	1	Credit 2	**Increased Ventilation**	1
	d	Mechanically Ventilated Increase ventilation rates 30% above ASHRAE 62.1-2007 for occupied spaces. Naturally Ventilated Meet recommendations of Good Practice Guide 237, follow the flow diagram process in CIBSE Applications Manual. AND Opt 1: Show natural ventilation meets CIBSE recommendations. OR Opt 2: Model room-by-room airflows to show minimum ventilation rates in ASHRAE 62.1-2007, for 90% of occupied spaces.	

1	Credit 8	**Light Pollution Reduction**	1
	d	Interior lighting Opt 1: Reduce input power (controlled by automatic device) of luminaires with line of site to envelope by 50% between 11 pm and 5am. Opt 2: All openings in envelope with direct line of site to luminaires must have shielding (controlled by automatic device) between 11 pm and 5 am. Exterior lighting Light exterior areas for only safety and comfort. Do not exceed 90.1-2007 lighting power densities for project classified zone.	

Water Efficiency

4	0	2	4	d/C	Credit Name	10 Pts.

Y	Prereq 1	**Water Use Reduction** (20%)	Req.
	d	20% Reduction Reduce building potable water use from a calculated baseline by 20%.	

2	Credit 1.1	**Water Efficient Landscaping** Reduce by 50%	2
	d	Reduce by 50% Reduce potable water consumption for irrigation by 50% from calculated mid-summer baseline.	

	2	Credit 1.2	**Water Efficient Landscaping** No Potable Use or No Irrigation	2
	2	Credit 2	**Innovative Wastewater Technologies**	2
2	2	Credit 3	**Water Use Reduction** (30%, 35%, 40% Reduction)	4
	d		Reduce building potable water use from a calculated baseline by: 30% Reduction = 2 pt 35% Reduction = 3 pts 40% Reduction = 4 pts	

Energy & Atmosphere

27	2	0	6	d/C	Credit Name	35 Pts.

Y	Prereq 1	**Fundamental Cx of the Building Energy Systems**	Req.
	C	Commission HVAC&R system and associated Controls, Lighting and Daylighting controls, Domestic Hot Water and Renewable Energy Systems. CxA must develop Cx Plan. Document the OPR and review the CD's, incorporate Cx requirements into the documents, verify installation and performance and issue summary report.	

Indoor Environmental Quality

12	1	0	2	d/C	Credit Name	15 Pts.

Y	Prereq 1	**Minimum IAQ Performance**	Req.
	d	Mechanically Ventilated Meet minimum requirements for ASHRAE 62.1-2007 for indoor ventilation or local code if more stringent. Naturally Ventilated Comply with ASHRAE 62.1-2007, Paragraph 5.1.	

Y	Prereq 2	**Environmental Tobacco Smoke (ETS) Control**	Req.
	d	All Project Types Opt 1: Prohibit smoking in the building. Opt 2: Provide dedicated smoking rooms directly exhausted and with negative pressure. Residential/Hospitality Prohibit smoking in common areas, weather-strip exterior doors and windows, seal penetrations in units, weather-strip all doors in units to hallways, conduct blower door test, and sample air leakage. All Options: Locate exterior smoke areas 25 feet away from entries, outdoor air intakes, and operable windows.	

1	Credit 1	**Outdoor Air Delivery Monitoring**	1
	d	Mechanically Ventilated Monitor CO2 in all spaces with occupant density of 25 people per 1,000 s.f. between 3 and 6 feet above the floor. For non-densely occupied space, provide direct air flow measurement device capable of measuring the minimum outdoor airflow rate within 15% of the minimum outdoor air rate, as defined by ASHRAE 62.1-2007. Naturally Ventilated Monitor CO2 in all naturally ventilated spaces, between 3 and 6 feet above the floor. All Options: Install permanent monitoring systems and configure to generate alarms when CO2 levels vary by 10% or more.	

	1	Credit 2	**Increased Ventilation**	1
	d		Mechanically Ventilated Increase ventilation rates 30% above ASHRAE 62.1-2007 for occupied spaces. Naturally Ventilated Meet recommendations of Good Practice Guide 237, follow the flow diagram process in CIBSE Applications Manual. AND Opt 1: Show natural ventilation meets CIBSE recommendations. OR Opt 2: Model room-by-room airflows to show minimum ventilation rates in ASHRAE 62.1-2007, for 90% of occupied spaces.	

1	Credit 3.1	**Construction IAQ Management Plan** During Construction	1
	C	Develop and implement IAQ plan for construction phase. Meet SMACNA IAQ guidelines for occupied spaces under construction. Protect on-site absorptive materials from moisture. If building air handlers are used during construction, use MERV 8 filters and replace all filtration immediately prior to occupancy.	

1	Credit 3.2	**Construction IAQ Management Plan** Before Occupancy	1
	C	Flush-Out Opt 1: After punch list is complete flush-out building with total air volume of 14,000 cu.ft. of outdoor air and keep temp above 60 degrees and humidity below 60%. Opt 2: When occupancy is desired prior to flush-out completion, deliver 3,500 cu.ft. of outdoor air. Once occupied, continue ventilating at 0.30 cfm/sf or rate determined by EQp1, whichever is greater. Maintain until 14,000 cu.ft. of outdoor air has been delivered. Air Testing After punch list is complete, prior to occupancy, conduct baseline IAQ testing. Failure of testing requires flush-out and retesting (repeat until compliant).	

1	Credit 4.1	**Low-Emitting Materials** Adhesives and Sealants	1
	C	Follow SCAQMD rule # 1168 for VOC limits on Adhesives and Sealants used on the inside of the weatherproofing system and applied on-site. Aerosol adhesives must comply with Green Seal standards.	

1	Credit 4.2	**Low-Emitting Materials** Paints And Coatings	1
	C	Paints, coatings, and primers (used on the inside of the weatherproofing system and applied on-site) must meet VOC limits established by Green Seal Standard GS-11. Wood coatings, stains, sealers, etc. VOC's to meet SCAQMD rule 1113.	

1	Credit 4.3	**Low-Emitting Materials** Flooring Systems	1
	C	All carpet to be approved by the Carpet and Rug Institute Green Label Plus. Carpet cushion to be CRI Green Label approved. Carpet and tile setting adhesive to meet EQc4.1 requirements. Hard surface flooring to be FloorScore compliant. Floor finishes to meet EQc4.2 requirements.	

1	Credit 4.4	**Low-Emitting Materials** Composite Wood and Agrifiber Products	1
	C	Composite wood, agrifiber products, and laminate adhesives (used on the inside of the weatherproofing system) shall contain no added urea-formaldehyde resins. Applies to particleboard, MDF, plywood, wheat board, strawboard, panel substrates, and door cores. Laminating adhesives used on permanently installed materials on-site or shop-applied must comply.	

		1	Credit 5	**Indoor Chemical & Pollutant Source Control**	1
	1		Credit 6.1	**Controllability of Systems** - Lighting	1
	d			Individual control for 90% of bldg. occupants AND controls for shared multi-occupant spaces to meet needs.	

1	Credit 6.2	**Controllability of Systems** - Thermal Comfort	1
	d	Individual comfort controls for 50% of bldg. occupants AND controls for all shared multi-occupant spaces. Operable windows can be used in lieu of controls for occupant areas 20 ft inside and 10 ft to either side of window opening.	

1	Credit 7.1	**Thermal Comfort** Design	1
	d	Design HVAC systems and the building envelope to meet the requirement of ASHRAE Standard 55-2004 Thermal Comfort Conditions for Human Occupancy.	

1	Credit 7.2	**Thermal Comfort** Verification	1
	d	Implement an anonymous thermal comfort survey of building occupants at 6 to 18 months after occupancy. Agree to develop a plan for corrective action if results indicate more than 20% of occupants are dissatisfied. (Project must also meet credit requirements for EQ7.1) AND provide permanent monitoring system. Residential projects are not eligible for this credit.	

1	Credit 8.1	**Daylight and Views** Daylight	1
	d	Opt 1: Simulation Perform computer simulations to show 75% of all regularly occupied spaces have between 25 and 500 footcandles. Opt 2: Prescriptive Perform daylight zone calculations. Opt 3: Measurement Daylight Measurement of actual space to show 75% of all regularly occupied spaces have 25 footcandles. Opt 4: Combination Any of the above calculations may be combined.	

1	Credit 8.2	**Daylight and Views** Views	1
	d	Achieve direct line of site to outdoors with vision glazing between 2'6" and 7'6" above floor for 90% of regularly occupied areas.	

Innovation & Design Process

6	0	0	0	d/C	Credit Name	6 Pts.

1	Credit 1.1	**Innovation in Design** Pilot Credit: Community Outreach & Involvement	1
	d/C	This strategy is detailed in LEED ND v3 NPDc12. The credit states that the Owner must meet with adjacent property owners, residents, business owners, workers, and various other parties to solicit and document their input on the proposed project prior to commencing a design. The project Owner must work directly with community associations to advertise an open community meeting to generate comments on project design from the beginning. The Owner must then host the open community meeting. The conceptual design should be modified as a direct result of community input. (Or if modifications are not made, explain why community input did not generate design modifications.) Establish ongoing means for communication between the developer and the community throughout the design and construction phases, and in cases where the developer maintains any control during the postconstruction phase.	

1	Credit 1.2	**Innovation in Design** Green Building Education	1
	d/C	To achieve this credit, the owner must develop and implement 2 of the following 3 options: 1) A comprehensive building signage program to educate the occupants and visitors of the benefits of green buildings. For example: visible meters tracking renewable energy generation or signs to call attention to water-conserving fixtures. 2) The development of a manual/case study, guideline or marketing materials that will highlight the green features of the project. 3) An educational outreach program or guided tour to focus on sustainable living, using the project as an example.	

1	Credit 1.3	**Innovation in Design** Green Cleaning Policy - EBOM (EQp3	1
	d/C	This strategy is detailed in LEED EB: O&M Reference Guide. The prerequisite states that the project must have in place a green cleaning policy for the building and site addressing purchase of sustainable products and equipment, establishment of standard operating procedures, development of strategies for promoting hygiene, development of safe handling and storage guidelines, development of training procedures, and provisions for collecting occupant feedback.	

1	Credit 1.4	**Innovation in Design** Exemplary Performance	1
1	d/C	Optimize Energy Performance: 50%	
1	Credit 1.5	**Innovation in Design** Exemplary Performance	1
1	d/C	On-Site Renewable Energy: 15%	
1	Credit 2	**LEED Accredited Professional**	1
	C		

Regional Priority

3	0	1	0	Eligible Credits for 91604	4 Pts.

1			RP	**Regional Priority:** SSc5.2 - Site Development, Maximize Open Space	Max
		1	RP	**Regional Priority:** WEc3 - Water Use Reduction (40%)	of 4
1			RP	**Regional Priority:** EAc2 - On-Site Renewable Energy (1%)	pts. of
1			RP	**Regional Priority:** IEQc8.1 - Daylight and Views, Daylight	6

83	3	3	20	**LEED for New Construction 2009 Point Totals**
				Certified 40-49 points | Silver 50-59 points | Gold 60-79 points | Platinum 80+

GREEN BUILDING GENERAL NOTES:

1. COMPLIANCE INFORMATION: THE BUILDER SHALL LEAVE IN THE BUILDING, COPIES OF THE COMPLETED, SIGNED AND SUBMITTED COMPLIANCE DOCUMENTS FOR THE BUILDING OWNER AT OCCUPANCY. FOR LOW-RISE RESIDENTIAL BUILDINGS, SUCH INFORMATION SHALL, AT A MINIMUM INCLUDE COPIES OF ALL CERTIFICATE OF COMPLIANCE, CERTIFICATION OF INSTALLATION, CERTIFICATE OF VERIFICATION DOCUMENTATION SUBMITTED.

2. OPERATING INFORMATION: THE BUILDER SHALL PROVIDE THE BUILDING OWNER AT OCCUPANCY, OPERATING INFORMATION FOR ALL APPLICABLE FEATURES, MATERIALS, COMPONENTS AND MECHANICAL DEVICES INSTALLED IN THE BUILDING. OPERATING INFORMATION SHALL INCLUDE INSTRUCTIONS ON HOW TO OPERATE THE FEATURES, MATERIALS, COMPONENTS, AND MECHANICAL DEVICES CORRECTLY AND EFFICIENTLY. THE INSTRUCTIONS SHALL BE CONSISTENT WITH THE SPECIFICATIONS.SET FORTH BY THE EXECUTIVE DIRECTOR.FOR RESIDENTIAL BUILDINGS, SUCH INFORMATION SHALL BE CONTAINED IN A FOLDER OR MANUAL WHICH PROVIDES ALL CERTIFICATE OF COMPLIANCE, CERTIFICATE OF INSTALLATION, AND CERTIFICATE OF VERIFICATION DOCUMENTATIONS. THIS OPERATING INFORMATION SHALL BE IN PAPER OR ELECTRONIC FORMAT. [10-103(B)2]FOR RESIDENTIAL BUILDINGS, SUCH INFORMATION SHALL BE CONTAINED IN A FOLDER OR MANUAL WHICH PROVIDES ALL CERTIFICATE OF COMPLIANCE, CERTIFICATE OF INSTALLATION, AND CERTIFICATE OF VERIFICATION DOCUMENTATIONS. THIS OPERATING INFORMATION SHALL BE IN PAPER OR ELECTRONIC FORMAT. [10-103(B)2]

3. MAINTENANCE INFORMATION. THE BUILDER SHALL PROVIDE TO THE BUILDING OWNER AT OCCUPANCY, MAINTENANCE INFORMATION OF ALL FEATURES, MATERIALS, COMPONENTS, AND MANUFACTURED DEVICES THAT REQUIRE ROUTINE MAINTENANCE FOR EFFICIENT OPERATION. REQUIRED ROUTINE MAINTENANCE ACTIONS SHALL BE CLEARLY STATED AND INCORPORATED ON A READILY ACCESSIBLE LABEL. THE LABEL MAY BE LIMITED TO IDENTIFYING, BY TITLE AND/OR PUBLICATION NUMBER, THE OPERATION AND MAINTENANCE MANUAL FOR THAT PARTICULAR MODEL AND TYPE OF FEATURE, MATERIAL, COMPONENT OR MANUFACTURED DEVICE. [10-103(B)3]

4. VENTILATION INFORMATION. THE BUILDER SHALL PROVIDE TO THE BUILDING OWNER AT OCCUPANCY, A DESCRIPTION OF THE QUANTITIES OF OUTDOOR AIR THAT THE VENTILATION SYSTEMS(S) ARE DESIGNED TO PROVIDE TO THE BUILDING'S CONDITIONED SPACE, AND INSTRUCTIONS FOR PROPER OPERATION AND MAINTENANCE OF THE VENTILATION SYSTEM. [10-103(B)4]

5. ALL SYSTEM, EQUIPMENT, APPLIANCE AND BUILDING COMPONENTS SHALL COMPLY WITH THE APPLICABLE MANUFACTURING, CONSTRUCTION AND INSTALLATION PROVISION OF SECTION 110.0 THROUGH 110.11 FOR NEWLY CONSTRUCTED BUILDINGS.

6. ANY APPLIANCE REGULATED BY THE APPLIANCE EFFICIENCY REGULATIONS, TITLE 20 CALIFORNIA CODE OF REGULATIONS, SECTION 1601 ET SEQ., MAY BE INSTALLED ONLY IF THE APPLIANCE FULLY COMPLIES WITH SECTION 1608(A) OF THOSE REGULATIONS. [110.L1(A)]

7. SERVICES WATER-HATING SYSTEMS SHALL BE EQUIPPED WITH AUTOMATIC TEMPERATURE CONTROLS CAPABLE OF ADJUSTMENTS FROM THE LOWEST TO THE HIGHEST ACCEPTABLE TEMPERATURE SETTINGS FOR THE INTENDED USE AS LISTED IN TABLE 3, CHAPTER 50 OF THE ASHRAE HANDBOOK, HVAC APPLIANCE VOLUME. [110.3(A)1]

8. ON SYSTEMS THAT HAVE TOTAL CAPACITY GREATER THAN 167,000 BTU/H, OUTLETS THAT REQUIRE HIGHER THAN SERVICE WATER TEMPERATURES AS LISTED IN THE ASHRAE HANDBOOK, APPLICATIONS VOLUME, SHALL HAVE SEPARATE REMOTE EATERS, HEAT EXCHANGERS, OR BOOSTERS TO SUPPLY H OUTLET WITH THE HIGHER TEMPERATURE. [110.3(C)3]

9. SERVICE HOT WATER SYSTEM WITH CIRCULATING PUMPS OR WITH ELECTRICAL HEAT TRACE SYSTEMS SHALL BE CAPABLE OF AUTOMATICALLY TURNING OFF THE SYSTEM. [110.3(C)2]

10. CONTRO9LS SERVICE WATER-HEATING SYSTEMS SHALL LIMIT THE OUTLET TEMPERATURE AT PUBLIC LAVATORIES TO 110°F. [110.3(C)3]

11. UNFIRED SERVICE WATER-HEATER STORAGE TANKS AND BACKUP TANKS FOR SOLAR WATER-HEATING SYSTEMS SHALL HAVE:

A. EXTERNAL INSULATION WITH AN INSTALLED R-VALUE OF AT LEAST R-12, OR

B. INTERNAL AND EXTERNAL INSULATION WITH COMBINED R-VALUE OF AT LEAST R-16, OR

C. THE HEAT LOSS OF THE TANK SURFACE BASED ON AN 80 WATER-AIR TEMPERATURE DIFFERENCE SHALL BE LESS THAN 6.5 BTU/HR PER SQUARE FOOT. [110.3(C)4]

12. FOR NONRESIDENTIAL, HIGH-RISE RESIDENTIAL, AND HOTEL/MOTEL BUILDINGS SPACE CONDITIONING SYSTEMS SHALL MEET THE EFFICIENCY STANDARDS SPECIFIED SECTION 120.2

13. CONTINUOUSLY BURNING PILOT LIGHTS SHALL BE PROHIBITED LISTED BELOW: [110.5]

A. FAN-TYPE CENTRAL FURNACES

B. HOUSEHOLD COOKING APPLIANCES, EXCEPT FOR HOUSEHOLDS COOKING APPLIANCES WITHOUT AN ELECTRICAL SUPPLY VOLTAGE CONNECTION AND IN WHICH EACH PILOT CONSUMES LESS THAN 150 BTU/HR.

C. POOL HEATERS

D. SPA HEATERS

14. ANY POOL OR SPA HEATING SYSTEM OR EQUIPMENT SHALL:

A. A THERMAL EFFICIENCY THAT COMPLIES WITH THE APPLIANCE EFFICIENCY REGULATIONS

B. HAVE A READILY ACCESSIBLE ON-OFF SWITCH, MOUNTED ON THE OUTSIDE OF THE HEATER THAT ALLOWS SHUTTING OFF THE HEATER WITHOUT ADJUSTING THE THERMOSTAT SETTING.

C. NOT UTILIZE ELECTRIC RESISTANCE HEATING.

D. HAVE A COVER FOR OUTDOOR POOLS OR SPAS THAT HAVE A HEAT PUMP OR GAS HEATER.

E. HAVE A PERMANENT, EASILY READABLE AND WEATHERPROOF INSTRUCTION CARD THAT GIVES INSTRUCTIONS FOR THE ENERGY EFFICIENT OPERATION OF THE POOL OR SPA HEATER AND FOR THE PROPER CARE OF POOL OR SPA WATER WHEN A COVER IS USED.

F. HAVE AT LEAST 36 INCHES OF PIPE INSTALLED BETWEEN THE FILTER AND HEATER OR DEDICATED SUCTION AND RETURN LINES OR BUILT-IN OR BUILT-UP CONNECTIONS SHALL BE INSTALLED TO ALLOW FOR THE FUTURE ADDITION OF SOLAR HEATING EQUIPMENT.

G. HAVE DIRECTIONAL INLETS FOR THE POOL OR SPA THAT ADEQUATELY MIX THE POOLWATER.

H. A TIME SWITCH OR SIMILAR CONTROL MECHANISM SHALL BE INSTALLED AS PART OF A POOL WATER CIRCULATION CONTROL SYSTEM THAT WILL ALLOW ALL PUMPS TO BE SET OR PROGRAMMED TO RUN ONLY DURING THE OFF-PEAK ELECTRIC DEMAND PERIOD AND FOR THE MINIMUM TIME NECESSARY TO MAINTAIN THE WATER IN THE CONDITION REQUIRED BY APPLICABLE PUBLIC HEALTH STANDARDS.

15. MANUFACTURED FENESTRATION PRODUCTS AND EXTERIOR DOORS SHALL HAVE AIR INFILTRATION RATES NOT EXCEEDING 0.3 CFM/FT2 OF WINDOW AREA, 0.3CFM/FT2 OF RESIDENTIAL DOOR ARE, 0.3 CFM.FT2 OF NONRESIDENTIAL SINGLE DOOR AREA AND 1.0 CFM/FT2 OF NONRESIDENTIAL DOUBLE DOOR AREA. [110.6(A) 1]

16. FENESTRATION PRODUCTS A SHALL BE RATED IN ACCORDANCE WITH NFRC 100 FOR U0FACTOR, NFRC 200 FOR SHGC AND VT OR USE THE APPLICABLE DEFAULT VALUE. FENESTRATION PRODUCTS SHALL HAVE A TEMPORARY LABEL FOR MANUFACTURED FENESTRATION PRODUCTS OR LABEL CERTIFICATE WHEN THE COMPONENT MODELING APPROACH IS USED AD FOR SITE-BUILT FENESTRATION MEETING THE REQUIREMENTS OF SECTION 10-111(A)1. [110.6(A)2, 110.6(A)3, 110.6(A)4, 110.6(A)5]

17. FIELD-FABRICATED FENESTRATION PRODUCTS AND EXTERIOR DOORS, OTHER THAN UNFRAMED GLASS DOORS AND FIRE DOORS, SHALL BE CAULKED BETWEEN HE FENESTRATION PRODUCTS OR EXTERIOR DOOR AND THE BUILDING, AND SHALL BE WEATHER STRIPPED. [110.6(B)]

18. JOINTS, PENETRATIONS AND OTHER OPENINGS IN THE BUILDING ENVELOPE THAT ARE POTENTIAL SOURCES OF AIR LEAKAGE SHALL BE CAULKED, GASKETED, WEATHER STRIPPED OR OTHERWISE SEALED TO LIMIT INFILTRATION AND EXFILTRATION. [110.7]

19. INSULATION SHALL BE CERTIFIED BY DEPARTMENT OF CONSUMER AFFAIRS, BUREAU OF HOME FURNISHING AND THERMAL INSULATION THAT THE INSULATION CONDUCTIVE THERMAL PERFORMANCE IS APPROVED PURSUANT TO THE CALIFORNIA CODE OF REGULATIONS, TITLE 24, PART 2, CHAPTER 12-13, ARTICLE 3, "STANDARDS FOR INSULATING MATERIAL." [110.8(A)]

20. UREA FORMALDEHYDE FOAM INSULATION MAY ONLY BE USED IN EXTERIOR SIDE WALLS AND REQUIRES A FOUR-MIL-THICK PLASTIC POLYETHYLENE VAPOR BARRIER BETWEEN THE UREA FORMALDEHYDE FOAM INSULATION AND THE INTERIOR SPACE IN ALL APPLICATIONS. [110.8(B)]

21. INSULATING MATERIAL SHALL BE INSTALLED IN COMPLIANCE WITH THE FLAME SPREAD RATING AND SMOKE DENSITY REQUIREMENTS OF THE CBC. [110.8(C)]

22. INSULATION INSTALLED ON AN EXISTING SPACE CONDITIONING DUCT, IT SHALL COMPLY WITH SECTION 604.0 OF THE CMC. [110.8(D)3]

23. EXTERNAL INSULATION INSTALLED ON AN EXISTING UNFIRED WATER STORAGE TANK OR ON AN EXISTING BACK-UP TANK FOR A SOLAR WATER-HEATING SYSTEM, IT SHALL HAVE AN R-VALUE OF AT LEAST R-12, OR THE HEAT LOSS OF THE TANK SURFACE BASED ON AN 80°F WATER-AIR TEMPERATURE DIFFERENCE SHALL BE LESS THAN 6.5 BTU PER HOUR PER SQUARE FOOT. [110.8(D)2]

GREEN BUILDING CODE RELATED NOTES

ENERGY

1. INSULATION SHALL CONFORM TO FEDERAL SPECIFICATION HH-1-521E. THERMAL RESISTANCE IS SHOWN ON THESE DRAWINGS.

2. ALL OPENINGS IN INSULATION WALLS SHALL BE PROPERLY WEATHER-STRIPPED OR GASKETED TO LIMIT AIR INFILTRATION. ALL GLASS DOORS SHALL COMPLY WITH AIR INFILTRATION STANDARDS OF ANSI A134.2, .2, .3 AND .4.

3. THE INSULATION CONTRACTOR SHALL PROVIDE A CERTIFICATE OF COMPLIANCE.

4. ALL GAS APPLIANCES, EXCEPT WATER HEATERS AND RANGE-TOP BURNERS, SHALL BE EQUIPPED WITH INTERMITTENT DEVICES.

5. PROVIDE MOTORIZED DAMPERS IN ALL FAN SYSTEMS WHICH EXHAUST AIR FROM THE ENERGY ENVELOPE, EXCEPT WHERE BACKDRAFT DAMPERS ARE SPECIFIED.

6. CAULK AROUND ALL PENETRATIONS INTO THE BUILDING ENVELOPE.

7. RECIRCULATING HOT WATER PIPING TO BE INSULATED IN UNHEATED SPACES.

8 GREEN: A COPY OF THE CONSTRUCTION DOCUMENTS OR A COMPARABLE DOCUMENT INDICATING THE INFORMATION FROM ENERGY CODE SECTION 110.10(B) THROUGH 110.10(C) SHALL BE PROVIDED TO THE OCCUPANT

WATER EFFICIENCY AND CONSERVATION

1. SEPARATE SUBMETERS SHALL BE INSTALLED IN ANY BUILDING OR NEW SPACE WITHIN A BUILDING THAT IS PROJECTED TO CONSUME MORE THAN 1000 GAL/DAY.

2. WHEN A SHOWER IS SERVED BY MORE THAN ONE SHOWERHEAD, THE COMBINED FLOW RATE OF ALL THE SHOWERHEADS AND/OR OTHER SHOWER OUTLETS CONTROLLED BY A SINGLE VALVE SHALL NOT EXCEED 2.0 GALLONS PER MINUTE AT 80 PSI, OR THE SHOWER SHALL BE DESIGNED TO ONLY ALLOW ONE SHOWERHEAD TO BE IN OPERATION AT A TIME.

3. FOR PROJECTS THAT INCLUDE LANDSCAPE WORK, THE *LANDSCAPE CERTIFICATION*, FORM GRN 12, SHALL BE COMPLETED PRIOR TO FINAL INSPECTION APPROVAL.

4. LOCKS SHALL BE INSTALLED ON ALL PUBLICLY ACCESSIBLE EXTERIOR FAUCETS AND HOSE BIBS.

5. FOR SITES WITH OVER 500 SQUARE FEET OF LANDSCAPE AREA, WASTE PIPING SHALL BE ARRANGED TO PERMIT DISCHARGE FROM THE CL

BOARD OF BUILDING AND SAFETY COMMISSIONERS

VAN AMBATIELOS
PRESIDENT

E. FELICIA BRANNON
VICE-PRESIDENT

JOSELYN GEAGA-ROSENTHAL
GEORGE HOVAGUIMIAN
JAVIER NUNEZ

CITY OF LOS ANGELES
CALIFORNIA

ERIC GARCETTI
MAYOR

DEPARTMENT OF BUILDING AND SAFETY
201 NORTH FIGUEROA STREET
LOS ANGELES, CA 90012

RAYMOND S. CHAN, C.E., S.E.
GENERAL MANAGER

FRANK BUSH
EXECUTIVE OFFICER

SOILS REPORT APPROVAL LETTER

December 20, 2018

LOG # 90285-01R
SOILS/GEOLOGY FILE - 2
LIQ
Correction: Revised to include conditions for main structure.

Recreational & Cultural Facilities
1149 S. Broadway, 8th Floor
Los Angeles, CA 90015

TRACT: 1000
LOT(S): 209
LOCATION: 12621 W. Rye St.

CURRENT REFERENCE REPORT/LETTER(S)	REPORT No.	DATE(S) OF DOCUMENT	PREPARED BY
Soils Report	14-134	10/26/2015	Geotechnical Engineering Group

PREVIOUS REFERENCE REPORT/LETTER(S)	REPORT No.	DATE(S) OF DOCUMENT	PREPARED BY
Dept. Correction Letter	90285	10/12/2015	LADBS
Soils Report	14-134	08/12/2015	Geotechnical Engineering Group
Laboratory Test Report	C-109511	07/23/2015	URS

The Grading Division of the Department of Building and Safety has reviewed the referenced report providing recommendations for the proposed one-story recreational center. According to the report, native soils were encountered during the exploration. The consultants recommend to support the proposed structure on mat-type foundations bearing on properly placed fill a minimum of 5 feet thick.

The site is located in a designated liquefaction hazard zone as shown on the "Seismic Hazard Zones" map issued by the State of California. The Liquefaction study included as a part of the report/s demonstrates that the site soils are subject to liquefaction. To mitigate the earthquake induced settlements it is proposed to use a mat foundation. The requirements of the 2014 City of Los Angeles Building Code, have been satisfied.

The referenced report is acceptable, provided the following conditions are complied with during site development:

(Note: Numbers in parenthesis ( ) refer to applicable sections of the 2014 City of LA Building Code. P/BC numbers refer the applicable Information Bulletin. Information Bulletins can be accessed on

SOILS REPORT APPROVAL LETTER

the internet at LADBS.ORG.)

1. The soils engineer shall review and approve the detailed plans prior to issuance of any permit. This approval shall be by signature on the plans that clearly indicates the soils engineer has reviewed the plans prepared by the design engineer; and, that the plans included the recommendations contained in their reports (7006.1).
2. All recommendations of the report that are in addition to or more restrictive than the conditions contained herein shall be incorporated into the plans.
3. A copy of the subject and appropriate referenced reports and this approval letter shall be attached to the District Office and field set of plans (7006.1). Submit one copy of the above reports to the Building Department Plan Checker prior to issuance of the permit.
4. A grading permit shall be obtained for all structural fill and retaining wall backfill (106.1.2).
5. All man-made fill shall be compacted to a minimum 90 percent of the maximum dry density of the fill material per the latest version of ASTM D 1557. Where cohesionless soil having less than 15 percent finer than 0.005 millimeters is used for fill, it shall be compacted to a minimum of 95 percent relative compaction based on maximum dry density. Placement of gravel in lieu of compacted fill is only allowed if complying with LAMC Section 91.7011.3.
6. If import soils are used, no footings shall be poured until the soils engineer has submitted a compaction report containing in-place shear test data and settlement data to the Grading Division of the Department; and, obtained approval (7008.2).
7. Compacted fill shall extend beyond the footings a minimum distance equal to the depth of the fill below the bottom of footings or a minimum of three feet whichever is greater (7011.3).
8. Existing uncertified fill shall not be used for support of footings, concrete slabs or new fill (1809.2, 7011.3).
9. Drainage in conformance with the provisions of the Code shall be maintained during and subsequent to construction (7013.12).
10. The applicant is advised that the approval of this report does not waive the requirements for excavations contained in the General Safety Orders of the California Department of Industrial Relations (3301.1).
11. Excavations shall not remove lateral support from a public way, adjacent property or an existing structure. Note: Lateral support shall be considered to be removed when the excavation extends below a plane projected downward at an angle of 45 degrees from the bottom of a footing of an existing structure, from the edge of the public way or an adjacent property. (3307.3.1)
12. A supplemental report shall be submitted to the Grading Division of the Department containing recommendations for shoring, underpinning, and sequence of construction in the event that any excavation would remove lateral support to the public way, adjacent property,

SOILS REPORT APPROVAL LETTER

or adjacent structures (3307.3). A plot plan and cross-section(s) showing the construction type, number of stories, and location of the structures adjacent to the excavation shall be part of the excavation plans (7006.2).

13. Prior to the issuance of any permit that authorizes an excavation where the excavation is to be of a greater depth than are the walls or foundation of any adjoining building or structure and located closer to the property line than the depth of the excavation, the owner of the subject site shall provide the Department with evidence that the adjacent property owner has been given a 30-day written notice of such intent to make an excavation (3307.1).
14. Unsurcharged temporary excavations over 4 feet exposing soil shall be trimmed back at a gradient not exceeding 1:1, as recommended.
15. All foundations shall derive entire support from properly placed fill, as recommended.
16. The seismic design shall be based on a Site Class D as recommended. All other seismic design parameters shall be reviewed by LADBS building plan check.
17. All roof, pad and deck drainage shall be conducted to the street in an acceptable manner in non-erosive devices or other approved location in a manner that is acceptable to the LADBS and the Department of Public Works (7013.10).
18. All concentrated drainage shall be conducted in an approved device and disposed of in a manner approved by the LADBS (7013.10).
19. The soils engineer shall inspect all excavations to determine that conditions anticipated in the report have been encountered and to provide recommendations for the correction of hazards found during grading (7008 & 1705.6).
20. Prior to pouring concrete, a representative of the consulting soils engineer shall inspect and approve the footing excavations. The representative shall post a notice on the job site for the LADBS Inspector and the Contractor stating that the work inspected meets the conditions of the report. No concrete shall be poured until the LADBS Inspector has also inspected and approved the footing excavations. A written certification to this effect shall be filed with the Grading Division of the Department upon completion of the work. (108.9 & 7008.2)
21. Prior to excavation an initial inspection shall be called with the LADBS Inspector. During the initial inspection, the sequence of construction; protection fences; and, dust and traffic control will be scheduled (108.9.1).
22. Prior to the placing of compacted fill, a representative of the soils engineer shall inspect and approve the bottom excavations. The representative shall post a notice on the job site for the LADBS Inspector and the Contractor stating that the soil inspected meets the conditions of the report. No fill shall be placed until the LADBS Inspector has also inspected and approved the bottom excavations. A written certification to this effect shall be included in the final compaction report filed with the Grading Division of the Department. All fill shall be placed under the inspection and approval of the soils engineer. A compaction report together with the approved soil report and Department approval letter shall be submitted to the Grading Division of the Department upon completion of the compaction. In addition, an

SOILS REPORT APPROVAL LETTER

Engineer's Certificate of Compliance with the legal description as indicated in the grading permit and the permit number shall be included (7011.3).

23. No footing/slab shall be poured until the compaction report is submitted and approved by the Grading Division of the Department.
24. The infiltration facility design and construction shall comply with the minimum requirements specified in the Information Bulletin P/BC 2014-118.
25. The infiltration system shall be constructed at the location shown on the drawing attached to the current report.
26. The construction of the infiltration system shall be provided under the inspection and approval of the soils engineer.
27. An overflow outlet shall be provided to conduct water to the street in the event that the infiltration system capacity is exceeded. (P/BC 2014-118)
28. Approval for the proposed infiltration system from the Bureau of Sanitation, Department of Public Works shall be secured.
29. A minimum distance of 10 feet (in any direction) shall be provided from adjacent proposed/existing footings to the discharge of the proposed infiltration system. A minimum distance of 10 feet horizontally shall be provided from private property lines to the proposed infiltration system.

ALAN DANG
Structural Engineering Associate II

AD/ad
Log No. 90285-01R
213-482-0480

cc: Geotechnical Engineering, Project Consultant
VN District Office

SOILS REPORT APPROVAL LETTER

BOARD OF BUILDING AND SAFETY COMMISSIONERS

VAN AMBATIELOS
PRESIDENT

E. FELICIA BRANNON
VICE PRESIDENT

JOSELYN GEAGA-ROSENTHAL
GEORGE HOVAGUIMIAN
JAVIER NUNEZ

CITY OF LOS ANGELES
CALIFORNIA

ERIC GARCETTI
MAYOR

DEPARTMENT OF BUILDING AND SAFETY
201 NORTH FIGUEROA STREET
LOS ANGELES, CA 90012

FRANK M. BUSH
GENERAL MANAGER
SUPERINTENDENT OF BUILDING

OSAMA YOUNAN, P.E.
EXECUTIVE OFFICER

SOILS REPORT APPROVAL LETTER

January 10, 2019

LOG # 106681
SOILS/GEOLOGY FILE - 2
LIQ

Recreational & Cultural Facilities
1149 S. Broadway, 8th Floor
Los Angeles, CA 90015

TRACT: 1000
LOT(S): 209
LOCATION: 12621 W. Rye St.

CURRENT REFERENCE REPORT/LETTER(S)	REPORT No.	DATE OF DOCUMENT	PREPARED BY
Update Report	14-134	01/04/2019	Geotechnical Engineering Group

PREVIOUS REFERENCE REPORT/LETTER(S)	REPORT No.	DATE OF DOCUMENT	PREPARED BY
Dept. Approval Letter	90285-01R	12/20/2018	LADBS
Soils Report	14-134	10/26/2015	Geotechnical Engineering Group
Dept. Correction Letter	90285	10/12/2015	LADBS
Soils Report	14-134	08/12/2015	Geotechnical Engineering Group
Laboratory Test Report	C-109511	07/23/2015	URS

The Grading Division of the Department of Building and Safety has reviewed the referenced report providing updated recommendations for the proposed one-story recreational center. According to the report, native soils were encountered during the exploration. The consultants recommend to support the proposed structure on mat-type foundations bearing on properly placed fill a minimum of 5 feet thick.

The Department previously conditionally approved the above referenced reports dated 10/26/2015 and 08/12/2015 for the proposed structure in a letter dated 12/20/2018, Log #90285-01R.

The site is located in a designated liquefaction hazard zone as shown on the Seismic Hazard Zones map issued by the State of California. The Liquefaction study included as a part of the report/s demonstrates that the site soils are subject to liquefaction. To mitigate the earthquake induced settlements it is proposed to use a mat foundation. The requirements of the 2017 City of Los Angeles Building Code have been satisfied.

SOILS REPORT APPROVAL LETTER- SUPPLEMENT

The referenced report is acceptable, provided the following conditions are complied with during site development:

(Note: Numbers in parenthesis ( ) refer to applicable sections of the 2017 City of LA Building Code. P/BC numbers refer the applicable Information Bulletin. Information Bulletins can be accessed on the internet at LADBS.ORG.)

1. All conditions of the above referenced Department approval letter(s) shall apply except as specifically modified herein.
2. The seismic design shall be based on a Site Class D as recommended. All other seismic design parameters shall be reviewed by LADBS building plan check. (1613.3.2)

ALAN DANG
Structural Engineering Associate II

AD/ad
Log No. 106681
213-482-0480

cc: Geotechnical Engineering Group, Project Consultant
LA District Office

SOILS REPORT APPROVAL LETTER- SUPPLEMENT

THE CITY OF LOS ANGELES OR ITS OFFICERS OR AGENTS SHALL NOT BE RESPONSIBLE FOR THE ACCURACY OR COMPLETENESS OF ELECTRONIC COPIES OF THIS PLAN SHEET.

FILE PATH: A360://Studio City Recreation Center/SCRC-Project Model_Central_Final.rvt

SHEET ISSUE DATE: 09/25/17

REVISION DATES (DESIGN STAGE ONLY)

BUREAU OF ENGINEERING
OFFICIAL RECORD

DEPARTMENT OF PUBLIC WORKS
BUREAU OF ENGINEERING
CITY OF LOS ANGELES
ENGINEERING

NO.	REVISION DESCRIPTION	DATE	BY

BUILDING NO. -

INDEX NO. RP-300106

LICENSED ARCHITECT TED ALLEN LIC. NO. C 23333 REGISTERED CALIFORNIA STATE OF CALIFORNIA

CITY ENGINEER

	DATE:
ARCHITECTURAL DIVISION	
ARCHITECT: ROBERT LOMELIN LIC. NO.: C 23333	1-24-2019
DESIGNED BY: Z. AKHTER, M. CHAVARRIA, A. KIM, M. LAM	1-24-2019
DRAWN BY: Z. AKHTER, M. CHAVARRIA, A. KIM	1-24-2019
CHECKED BY: ROBERT LOMELIN	1-24-2019
APPROVED BY:MAHMOOD KARIMZADEH,AIA, DEPUTY CITY ENGINEER	1-24-2019

CITY OF LOS ANGELES
DEPARTMENT OF RECREATION AND PARKS

CLIENT: DEPARTMENT OF RECREATION AND PARKS
GENERAL MANAGER: MICHAEL A. SHULL

SHEET TITLE: SOILS REPORT APPROVAL LETTERS

PROJECT: STUDIO CITY RECREATION CENTER

ADDRESS: 12621 RYE STREET, STUDIO CITY, CA 91604

WORK ORDER NO. E170267B

PLAN FILE NO. 860

DRAWING NO. G007

SHEET 7 OF SHEETS 211

PLOTTED:7/1/2019 11:34:07 AM

FORM GEN. 160 (Rev. 11-02)

CITY OF LOS ANGELES
INTERDEPARTMENTAL CORRESPONDENCE

Date: June 20, 2019

To: Chad Doi
Building Civil Engineer II
Department of Building and Safety

From: Darryl Ford
Superintendent
Planning, Construction and Maintenance Branch
Department of Recreation and Parks

Subject: Studio City Recreation Center - Gymnasium

Pursuant to the letter, dated December 6, 2018, issued by Department of City Planning, it is agreed that the City of Los Angeles Charter exempts the Department of Recreation and Parks (RAP) projects from the regulations of Chapter 1 of the Los Angeles Municipal Code (CH 1 LAMC). The Bureau of Engineering, a service provider, is tasked to manage the development of the following proposed project for RAP.

Project name: Studio City Recreation Center – Gymnasium
Project address: 12621 Rye St, Studio City, CA 91604
Scope of work: the project's scope includes the construction of a new recreation center with a modern gymnasium and community center; renovation of a 35 space parking lot; and update adjacent outdoor spaces.
Plan Check Number: B17LA19332

Since the proposed project is owned and operated by RAP for public recreation, it is exempt from the regulations of CH 1 LMAC. Please contact my staff, Sean Phan, at 213-202-2637 or sean.phan@lacity.org if you have any questions.

Cc: David Takata, RAP
Ricardo Tres, RAP

Attachment:

Department of Recreation and Parks Authority under City Charter

DEPARTMENT OF RECREATION AND PARKS SIGNED CITY CHARTER EXEMPTION LETTER

DEPARTMENT OF CITY PLANNING
CITY PLANNING COMMISSION
SAMANTHA MILLMAN
PRESIDENT
VAHID KHORSAND
VICE-PRESIDENT
DAVID H. J. AMBROZ
CAROLINE CHOI
RENEE DAKE WILSON
JEANIE MAIER
MARC MITCHELL
VERONICA PADILLA-CAMPOS
DANA M. PERLMAN

ROCKY WILES
COMMISSION OFFICE MANAGER
(213) 978-1300

CITY OF LOS ANGELES
CALIFORNIA

ERIC GARCETTI
MAYOR

EXECUTIVE OFFICES
200 N. SPRING STREET, ROOM 525
LOS ANGELES, CA 90012-4801

VINCENT P. BERTONI, AICP
DIRECTOR
(213) 978-1270

KEVIN J. KELLER, AICP
EXECUTIVE OFFICER
(213) 978-1272

LISA M. WEBBER, AICP
DEPUTY DIRECTOR
(213) 978-1274

http://planning.lacity.org

Date: December 6, 2018

To: Michael Shull, General Manager, Department of Recreation and Parks
Frank M. Bush, General Manager, Department of Building and Safety
Ralph M. Terrazas, Fire Chief, Fire Department
Gary Lee Moore, City Engineer, Department of Public Works, Bureau of Engineering

From: Vincent P. Bertoni, AICP, Director of Planning

Subject: Department of Recreation and Parks Authority under City Charter

In response to recent discussions involving management and staff from Department of Recreation and Parks, Department of City Planning and the City Attorney's Office, all parties concur that the City of Los Angeles Charter establishes broad authorization for the Department of Recreation and Parks to pursue parks and recreational facilities located on property owned or controlled by the City for public recreation, including facilities leased to, or operated and/or managed by private operators and any accessory use or building, within the City of Los Angeles. This memorandum does not apply to privately owned and operated park projects. The following Charter Sections (only applicable language listed) provide the aforementioned authority:

Section 590. Powers and Duties of the Department.

The Department of Recreation and Parks shall have the power and duty:
(a) to establish, construct, maintain, operate and control, wherever located:
(1) all parks of the City of Los Angeles;
(2) all recreational facilities, museums, observatories, municipal auditoriums, sports centers and all lands, waters, facilities or equipment set aside or dedicated for recreational purposes and public enjoyment; and
(3) all property acquired by it or assigned to its jurisdiction for public recreation.
(b) to design, construct and operate, lease, rent or sell concessions or privileges to be exercised for the benefit, education, amusement, convenience or enjoyment of the public, in connection with any function, site or facility under the jurisdiction of the department;
(c) to establish schedules of charges for special services;
(d) to promote public recreation and cooperate with other public agencies and organizations for that purpose; and

1

DEPARTMENT OF RECREATION AND PARKS CITY CHARTER AUTHORITY DOCUMENT- PAGE 1

(e) to establish, maintain and operate playgrounds or other recreational facilities upon portions of public streets, under terms and conditions provided by ordinance.

Section 591. Board of Recreation and Parks Commissioners.

The Board of Recreation and Park Commissioners shall have the power:
(a) to control all recreation and park sites;
(b) to control, appropriate and expend all money in the Recreation and Parks Fund and authorize the City Treasurer to invest any surplus funds under its control in accordance with Section 323(b); and
(c) to organize the work of the department into divisions and to appoint an administrative officer for each division or for any group of divisions.

Section 594. Control and Management of Recreation and Park Lands.

(a) Management and Control. The Department of Recreation and Parks shall operate, manage and control all property now or hereafter owned or controlled by the City for public recreation, including parks, and shall have power in the name of the City to acquire and take by purchase, lease, condemnation, gift, in trust or otherwise, any and all property necessary or convenient for recreation, including park purposes.
(b) Acquisition of Property. No real property shall be acquired by the City for recreation sites, including parks, unless first approved by the Board of Recreation and Park Commissioners.
(c) Restrictions on Transfer of Dedicated Parks. All lands heretofore or hereafter set apart or dedicated as a public park shall forever remain for the use of the public inviolate; but the board may authorize use of the lands for any park purpose, and for…….
(d) Transfer to Purposes other than Recreation and Park Purposes. No sites under the management and control of the department shall be devoted or transferred to any other purpose in whole or in part, except in compliance with……

As stated in Section 591 of the Los Angeles Charter, the Board of Recreation and Park Commissioners (Board) has the power to control all City-owned and operated parks and recreational facilities. In addition, all proposed park projects require approval by the Board, thus ensuring consistency with adopted City plans. The Board shall have the authority to determine appropriate locations for park projects, uses associated with park projects, accessory structures and buildings, and any off-street parking to satisfy park project needs. This authorization exempts Department of Recreation and Parks projects, including facilities leased to, or operated and/or managed by private operators and any accessory use or building, from the regulations of Chapter I of the Los Angeles Municipal Code and any General Provisions and Zoning chapters that may be adopted subsequent to this memorandum, including but not limited to the following:

A. Use for each zone (Parks and recreational facilities shall be permitted in all zones.)
B. Restriction for each zone (Parks and recreational facilities, including any accessory use or building, shall be permitted in all zones.)
C. Area for each zone (The area of each structure and/or building shall not be restricted in all zones.)
D. Specific Plans
E. Districts, including Overlays
F. Off-street parking
G. Height
H. Signs

2

DEPARTMENT OF RECREATION AND PARKS CITY CHARTER AUTHORITY DOCUMENT- PAGE 2

Further, any Department of Recreation and Parks project, including facilities leased to, or operated and/or managed by private operators and any accessory use or building, shall not be subject to any Department of City Planning entitlements for development, including but not limited to the following:

A. Project Permit Compliance
B. Zone Change (Changes to zones will continue to be reflected during the community plan update process.)
C. Conditional Use Permit (The sale of alcoholic beverages for on or off-site consumption requires approval by the RAP Board. Department of Recreation and Parks will be responsible for coordinating directly with the California Department of Alcoholic Beverage Control regarding license authorizations.)
D. Variance
E. Adjustment
F. Site Plan Review
G. Previously approved entitlements having a Sunset Clause

All other City regulations for development projects, not administered or regulated by Chapter I of the Los Angeles Municipal Code, shall continue to be enforced by each respective City department, unless otherwise stated by said department. All Department of Recreation and Parks projects that require building permits for construction, including tenant improvements, shall be subject to all current building code regulations as enforced by the Department of Building and Safety.

In addition, this memorandum does not supersede any State of California or Federal regulations, including but not limited to, the California Coastal Act (California Government Code Sections 30000-30900), the Subdivision Map Act (California Government Code Sections 66410-66499.58), or the Americans With Disabilities Act.

Finally, the Department of City Planning and the Department of Recreation and Parks will jointly write a Memorandum of Understanding for the purpose of maintaining communication regarding all proposed park projects. Department of Recreation and Parks staff has agreed to convene with Department of City Planning staff on a quarterly basis, as needed, to solicit urban design feedback for all proposed park projects to ensure consistency with applicable design guidelines and adopted plans.

3

DEPARTMENT OF RECREATION AND PARKS CITY CHARTER AUTHORITY DOCUMENT- PAGE 3

Waiver No. 1427

Los Angeles Unified School District
Developer Fee Program Office
Waiver of School Fees

This certifies that **City of Los Angeles** (Property Owner) has complied with the developer fee requirement of the Los Angeles Unified School District for the following project:

12621 W. Rye St.
Project Address(es)

2362-015-900
Assessor Parcel Number(s) / Legal Description

11,577 Square Footage
☐ Residential
■ Commercial

Fees waived not to exceed $ **7,061.97** *(Only apply to permit 17010-10000-04089)*

Exemption Basis/Type Government Building

A building permit may be issued upon compliance with other applicable requirements

Approved by:

Sonja White
Administrative Analyst
11-21-18
Date

Mariah Atienza
Director of Revenue Accounting
11/21/18
Date

City of LA X DFPO
Case File 13653

Total Projected Fees $ 7,061.97
Less Amount Waived $ 7,061.97
Fees Due $ 0.00

Signed MARIAH YEE
Title
Date 11/22/2018

LOS ANGELES UNIFIED SCHOOL DISTRICT SIGNED FEE WAIVER FORM

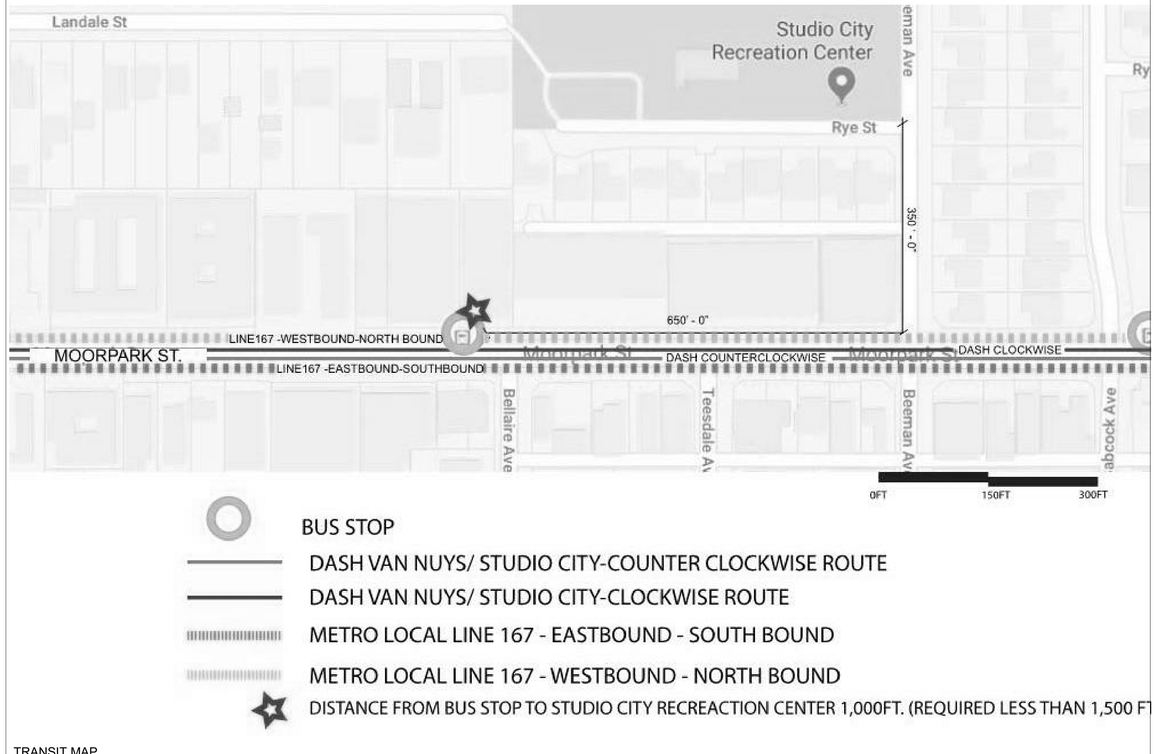

TRANSIT MAP

J. MICHAEL CAREY
City Clerk

FRANK T. MARTINEZ
Executive Officer

When making inquiries relative to this matter refer to File No.

CITY OF LOS ANGELES
CALIFORNIA

JAMES K. HAHN
MAYOR

Office of the CITY CLERK
Council and Public Services
Room 395, City Hall
Los Angeles, CA 90012
Council File Information - (213) 978-1043
General Information - (213) 978-1133
Fax: (213) 978-1040

HELEN GINSBURG
Chief, Council and Public Services Division

01-2580

CPC-02-1021(CA)

September 5, 2002

Councilmember Holden
Councilmember Perry
City Attorney,
Attn: Sharon S. Cardenas
Bureau of Engineering,
Land and Development Group
Department of Transportation,
Traffic/Planning Sections
Department of Building & Safety
c/o Zoning Coordinator

City Planning Department,
Attn: Patti Lalongo
City Planning Commission
Director of Planning
cc: Advisory Agency
cc: Community Planning Section
cc: Geographic Information Section
Attn: Fae Tsukamoto
Bureau of Street Lighting,
"B" Permit Section

See Attached List for Further Notification

RE: AMENDING LAMC SECTION 12.21.1 B TO ALLOW MUNICIPAL BUILDINGS TO BE BUILT TO A MAXIMUM HEIGHT OF 35 FEET AND TO ALLOW LIGHT STANDARDS FOR SPORTS FIELD TO BE BUILT TO A MAXIMUM HEIGHT OF 75 FEET

At the meeting of the Council held AUGUST 13, 2002, the following action was taken:

Attached report adopted	X
Ordinance adopted	X
Ordinance number	174788
Publication date	9-4-02
Effective date	10-5-02
Mayor approved	8-22-02
To the Mayor FORTHWITH	X
Findings adopted	X
Generally exempt	X

J. Michael Carey
City Clerk
kw

Steno\012580

AN EQUAL EMPLOYMENT OPPORTUNITY – AFFIRMATIVE ACTION EMPLOYER

Recyclable and made from recycled waste.

BUREAU OF ENGINEERING
OFFICIAL RECORD

FILE PATH: A360://Studio City Recreation Center/SCRC-Project Model_Central_Final.rvt

SHEET ISSUE DATE:01/10/19

REVISION DATES (DESIGN STAGE ONLY)

THE CITY OF LOS ANGELES OR ITS OFFICERS OR AGENTS SHALL NOT BE RESPONSIBLE FOR THE ACCURACY OR COMPLETENESS OF ELECTRONIC COPIES OF THIS PLAN SHEET.

ENGINEERING
CITY OF LOS ANGELES

BUREAU OF ENGINEERING

NO.	REVISION DESCRIPTION	DATE	BY

BUILDING NO. -

INDEX NO. **RP-300106**

PUBLIC WORKS

DEPARTMENT OF ENGINEERING

CITY OF LOS ANGELES

LICENSED ARCHITECT, CONNIE CHAN, No. 30133, RENEWAL 08/31/2019, STATE OF CALIFORNIA

CITY ENGINEER	TED ALLEN, PE	DATE: 1-24-2019
ARCHITECTURAL DIVISION	LIC. NO.: C 23333	1-24-2019
ARCHITECT: ROBERT LOMELIN	DESIGNED BY: Z. AKHTER, M. CHAVARRIA, A. KIM, M. LAM	1-24-2019
DRAWN BY: Z. AKHTER, M. CHAVARRIA, A. KIM	CHECKED BY: ROBERT LOMELIN	1-24-2019
APPROVED BY: MAHMOOD KARIMZADEH, AIA, DEPUTY CITY ENGINEER		1-24-2019

CLIENT: DEPARTMENT OF RECREATION AND PARKS
GENERAL MANAGER: MICHAEL A. SHULL

SHEET TITLE: TRANSIT MAP, SCHOOL DIST. WAIVER ETC.

PROJECT: STUDIO CITY RECREATION CENTER

ADDRESS: 12621 RYE STREET, STUDIO CITY, CA 91604

WORK ORDER NO. E170267B
PLAN FILE NO. 860
DRAWING NO. G008
SHEET 8 OF SHEETS 211

PLOTTED:7/1/2019 11:34:10 AM

CHAPTER 11B

ACCESSIBILITY TO PUBLIC BUILDINGS, PUBLIC ACCOMMODATIONS, COMMERCIAL BUILDINGS AND PUBLIC HOUSING

DIVISION 1: APPLICATION AND ADMINISTRATION

***11B*-101 Purpose**

***11B*-101.1 General.** This *chapter* contains scoping and technical requirements for accessibility to sites, facilities, buildings, and elements by individuals with disabilities. The requirements are to be applied during the design, construction, additions to, and alteration of sites, facilities, buildings, and elements to the extent required by *Chapter 1, Section 1.9.*

11B*-101.2 *Reserved.

***11B*-102 Dimensions for adults and children.** The technical requirements are based on adult dimensions and anthropometrics. In addition, this *chapter* includes technical requirements based on children's dimensions and anthropometrics for drinking fountains, water closets, toilet compartments, lavatories and sinks, dining surfaces, and work surfaces.

***11B*-103 Equivalent facilitation.** Nothing in these requirements prevents the use of designs, products, or technologies as alternatives to those prescribed, provided they result in substantially equivalent or greater accessibility and usability.

***11B*-104 Conventions**

***11B*-104.1 Dimensions.** Dimensions that are not stated as "maximum" or "minimum" are absolute.

***11B*-104.1.1 Construction and manufacturing tolerances.** All dimensions are subject to conventional industry tolerances except where the requirement is stated as a range with specific minimum and maximum end points.

***11B*-104.2 Calculation of percentages.** Where the required number of elements or facilities to be provided is determined by calculations of ratios or percentages and remainders or fractions result, the next greater whole number of such elements or facilities shall be provided. Where the determination of the required size or dimension of an element or facility involves ratios or percentages, rounding down for values less than one half shall be permitted.

***11B*-104.3 Figures.** Unless specifically stated otherwise, figures are provided for informational purposes only.

***11B*-105 Referenced standards.**

***11B*-105.1 General.** *See Chapter 35.*

***11B*-106 Definitions**

***11B*-106.1 General.** For the purpose of this *chapter*, the terms *listed* in Section *11B*-106.5 *and defined in Chapter 2* have the indicated meaning.

***11B*-106.2 Terms defined in referenced standards.** Terms not *listed* in *Section 11B*-106.5 *and not defined in Chapter 2, Section 202,* but specifically defined in a referenced standard, shall have the specified meaning from the referenced standard unless otherwise stated.

***11B*-106.3 Undefined terms.** The meaning of terms not specifically *listed* in *Section 11B*-106.5*, and not defined in Chapter 2, Section 202,* or in referenced standards shall be as defined by collegiate dictionaries in the sense that the context implies.

***11B*-106.4 Interchangeability.** *See Chapter 2, Section 201.2.*

Convention	Description
36 / 914	dimension showing English units (in inches unless otherwise specified) above the line and SI units (in millimeters unless otherwise specified) below the line
6 / 152	dimension for small measurements
33-36 / 838-914	dimension showing a range with minimum - maximum
min	minimum
max	maximum
>	greater than
≥	greater than or equal to
<	less than
≤	less than or equal to
	boundary of clear floor space or maneuvering clearance
	centerline
	a permitted element or its extension
	direction of travel or approach
	a wall, floor, ceiling or other element cut in section or plan
	a highlighted element in elevation or plan
	location zone of element, control or feature

FIGURE *11B*-104
GRAPHIC CONVENTION FOR FIGURES

3. *Altering existing elevators.*
4. *Altering existing steps.*
5. *Altering existing handrails.*

4. *Alterations solely for the purpose of barrier removal undertaken pursuant to the requirements of the Americans with Disabilities Act (Public Law 101-336, 28 C.F.R., Section 36.304) or the accessibility requirements of this code as those requirements or regulations now exist or are hereafter amended including, but not limited to, one or more of the following items shall be limited to the actual scope of work of the project and shall not be required to comply with Section 11B-202.4:*
   1. *Installing ramps.*
   2. *Making curb cuts in sidewalks and entrance.*
   3. *Repositioning shelves.*
   4. *Rearranging tables, chairs, vending machines, display racks, and other furniture.*
   5. *Repositioning telephones.*
   6. *Adding raised markings on elevator control buttons.*
   7. *Installing flashing alarm lights.*
   8. *Widening doors.*
   9. *Installing offset hinges to widen doorways.*
   10. *Eliminating a turnstile or providing an alternative accessible route.*
   11. *Installing accessible door hardware.*
   12. *Installing grab bars in toilet stalls.*
   13. *Rearranging toilet partitions to increase maneuvering space.*
   14. *Insulating lavatory pipes under sinks to prevent burns.*
   15. *Installing a raised toilet seat.*
   16. *Installing a full-length bathroom mirror.*
   17. *Repositioning the paper towel dispenser in a bathroom.*
   18. *Creating designated accessible parking spaces.*
   19. *Removing high-pile, low-density carpeting.*
5. *Alterations of existing parking lots by resurfacing and/or restriping shall be limited to the actual scope of work of the project and shall not be required to comply with Section 11B-202.4.*
6. *The addition or replacement of signs and/or identification devices shall be limited to the actual scope of work of the project and shall not be required to comply with Section 11B-202.4.*
7. *Projects consisting only of heating, ventilation, air conditioning, reroofing, electrical work not involving placement of switches and receptacles, cosmetic work that does not affect items regulated by this code, such as painting, equipment not considered to be a part of the architecture of the building or area, such as computer terminals and office equipment shall not be required to comply with Section 11B-202.4 unless they affect the usability of the building or facility.*
8. *When the adjusted construction cost, as defined, is less than or equal to the current valuation threshold, as defined, the cost of compliance with Section 11B-202.4 shall be limited to 20 percent of the adjusted construction cost of alterations, structural repairs or additions. When the cost of full compliance with Section 11B-202.4 would exceed 20 percent, compliance shall be provided to the greatest extent possible without exceeding 20 percent.*

   When the adjusted construction cost, as defined, exceeds the current valuation threshold, as defined, and the enforcing agency determines the cost of compliance with Section 11B-202.4 is an unreasonable hardship, as defined, full compliance with Section 11B-202.4 shall not be required. Compliance shall be provided by equivalent facilitation or to the greatest extent possible without creating an unreasonable hardship; but in no case shall the cost of compliance be less than 20 percent of the adjusted construction cost of alterations, structural repairs or additions. The details of the finding of unreasonable hardship shall be recorded and entered into the files of the enforcing agency and shall be subject to Chapter 1, Section 1.9.1.5, Special Conditions for Persons with Disabilities Requiring Appeals Action Ratification.

   For the purposes of this exception, the adjusted construction cost of alterations, structural repairs or additions shall not include the cost of alterations to path of travel elements required to comply with Section 11B-202.4.

   In choosing which accessible elements to provide, priority should be given to those elements that will provide the greatest access in the following order:
   1. *An accessible entrance;*
   2. *An accessible route to the altered area;*
   3. *At least one accessible restroom for each sex or one accessible unisex (single-user or family) restroom;*
   4. *Accessible telephones;*
   5. *Accessible drinking fountains; and*
   6. *When possible, additional accessible elements such as parking, signs, storage and alarms.*

   If an area has been altered without providing an accessible path of travel to that area, and subsequent alterations of that area or a different area on the same path of travel are undertaken within three years of the original alteration, the total cost of alterations to the areas on that path of travel during the preceding three-year period shall be considered in determining whether the cost of making that path of travel accessible is disproportionate.
9. *Certain types of privately funded, multistory buildings and facilities were formerly exempt from accessibility requirements above and below the first floor under this code, but as of April 1, 1994 are no longer exempt due to more restrictive provisions in the federal Americans with Disabilities Act. In alteration projects involving buildings and facilities previously approved and built without elevators, areas above and below the ground floor are subject to the 20-percent disproportionality provisions described in Exception 8, above, even if the value of the project exceeds the valuation threshold in Exception 8. The types of buildings and facilities are:*
   1. *Office buildings and passenger vehicle service stations of three stories or more and 3,000 or more square feet (279 m²) per floor.*
   2. *Offices of physicians and surgeons.*
   3. *Shopping centers.*
   4. *Other buildings and facilities three stories or more and 3,000 or more square feet (279 m²) per floor if a reasonable portion of services sought and used by the public is available on the accessible level.*

   For the general privately funded multistory building exception applicable to new construction and alterations, see Section 11B-206.2.3, Exception 1.

   The elevator exception set forth in this section does not obviate or limit in any way the obligation to comply with the other accessibility requirements in this code. For example, floors above or below the accessible ground floor must meet the requirements of this section except for elevator service. If toilet or bathing facilities are provided on a level not served by an elevator, then toilet or bathing facilities must be provided on the accessible ground floor.
10. *Alterations solely for the purpose of installing electric vehicle charging stations (EVCS) at facilities where vehicle fueling, recharging, parking or storage is a primary function shall comply with Section 11B-202.4 to the maximum extent feasible without exceeding 20 percent of the cost of the work directly associated with the installation of EVCS.*

    Alterations solely for the purpose of installing EVCS at facilities where vehicle fueling, recharging, parking or storage is not a primary function shall not be required to comply with Section 11B-202.4

***11B*-202.5 Alterations to qualified historic buildings and facilities.** Alterations to a qualified historic building or facility shall comply with *the State Historical Building Code, Part 8, Title 24, of the California Code of Regulations.*

Exception: ***Reserved.***

***11B*-106.5 Defined terms.** *The following terms are defined in Chapter 2, Section 202.*

ACCESS AISLE
ACCESSIBILITY
ACCESSIBLE
ACCESSIBLE ELEMENT
ACCESSIBLE MEANS OF EGRESS
ACCESSIBLE ROUTE
ACCESSIBLE SPACE
ADAPTABLE
ADDITION
ADJUSTED CONSTRUCTION COST
ADMINISTRATIVE AUTHORITY
AISLE
ALTERATION
AMUSEMENT ATTRACTION
AMUSEMENT RIDE
AMUSEMENT RIDE SEAT
ANSI
APPROVED
APPROVED TESTING AGENCY
AREA OF REFUGE
AREA OF SPORT ACTIVITY
ASSEMBLY AREA
ASSISTIVE LISTENING SYSTEM (ALS)
AUTOMATIC DOOR
AUTOMATIC TELLER MACHINE (ATM)
BATHROOM
BLENDED TRANSITION
BOARDING PIER
BOAT LAUNCH RAMP
BOAT SLIP
BUILDING
BUILDING OFFICIAL
CATCH POOL
CCR
CHARACTERS
CHILDREN'S USE
CIRCULATION PATH
CLEAR
CLEAR FLOOR SPACE
CLOSED-CIRCUIT TELEPHONE
COMMERCIAL FACILITIES
COMMON USE
COMPLY WITH
CROSS SLOPE
CURB CUT
CURB RAMP
DETECTABLE WARNING
DIRECTIONAL SIGN
DISABILITY
DORMITORY
DRIVE-UP ELECTRIC VEHICLE CHARGING STATION
ELECTRIC VEHICLE (EV)
ELECTRIC VEHICLE (EV) CHARGER
ELECTRIC VEHICLE CHARGING SPACE (EV SPACE)
ELECTRIC VEHICLE CHARGING STATION (EVCS)
ELECTRIC VEHICLE (EV) CONNECTOR
ELEMENT
ELEVATED PLAY COMPONENT
ELEVATOR, PASSENGER
EMPLOYEE WORK AREA
ENFORCING AGENCY
ENTRANCE
EQUIVALENT FACILITATION
EXISTING BUILDING OR FACILITY
EXIT
FACILITY
FUNCTIONAL AREA
GANGWAY
GOLF CAR PASSAGE
GRAB BAR
GRADE (ADJACENT GROUND ELEVATION)
GRADE BREAK
GROUND FLOOR
GROUND LEVEL PLAY COMPONENT
GUARD
HANDRAIL
HEALTH CARE PROVIDER
HISTORICAL BUILDINGS
HOUSING AT A PLACE OF EDUCATION
IF, IF . . . THEN
INTERNATIONAL SYMBOL OF ACCESSIBILITY
KEY STATION
KICK PLATE
KITCHEN OR KITCHENETTE
LAVATORY
MAIL BOXES
MARKED CROSSING
MAY

MEZZANINE
MULTI-BEDROOM HOUSING UNIT
NFPA
NOSING
OCCUPANT LOAD
OCCUPIABLE SPACE
OPEN RISER
OPERABLE PART
PASSENGER ELEVATOR
PATH OF TRAVEL
PEDESTRIAN
PEDESTRIAN WAY
PERMANENT
PERMIT
PICTOGRAM
PLACE OF PUBLIC ACCOMMODATION
PLATFORM
PLATFORM (WHEELCHAIR) LIFT
PLAY AREA
PLAY COMPONENT
POINT-OF-SALE DEVICE
POWDER ROOM
POWER-ASSISTED DOOR
PRIVATE BUILDING OR FACILITY
PROFESSIONAL OFFICE OF A HEALTH CARE PROVIDER
PUBLIC BUILDING OR FACILITY
PUBLIC ENTITY
PUBLIC ENTRANCE
PUBLIC HOUSING
PUBLIC USE
PUBLIC-USE AREAS
PUBLIC WAY
QUALIFIED HISTORIC BUILDING OR FACILITY
RAMP
REASONABLE PORTION
RECOMMEND
REMODELING
REPAIR
RESIDENTIAL DWELLING UNIT
RESTRICTED ENTRANCE
RISER
RUNNING SLOPE
SELF-SERVICE STORAGE
SERVICE ENTRANCE
SHALL
SHOPPING CENTER (OR SHOPPING MALL)
SHOULD
SIDEWALK
SIGN
SINK
SITE
SLEEPING ACCOMMODATIONS
SOFT CONTAINED PLAY STRUCTURE
SPACE
SPECIFIED PUBLIC TRANSPORTATION
STAGE
STAIR
STAIRWAY
STORY
STRUCTURAL FRAME
STRUCTURE
TACTILE
TACTILE SIGN
TECHNICALLY INFEASIBLE
TEEING GROUND
TEMPORARY
TEXT TELEPHONE
TRANSFER DEVICE
TRANSIENT LODGING
TRANSIT BOARDING PLATFORM
TRANSITION PLATE
TREAD
TTY
UNREASONABLE HARDSHIP
USE ZONE
VALUATION THRESHOLD
VEHICULAR WAY
WALK
WET BAR
WHEELCHAIR
WHEELCHAIR SPACE
WORKSTATION
WORK AREA EQUIPMENT

***11B*-107 Special conditions appeals action.** *See Chapter 1, Section 1.9.1.5.*

***11B*-108 Maintenance of accessible features.** *A public accommodation shall maintain in operable working condition those features of facilities and equipment that are required to be accessible to and useable by persons with disabilities. Isolated or temporary interruptions in service or accessibility due to maintenance or repairs shall be permitted.*

BUREAU OF ENGINEERING
OFFICIAL RECORD

DIVISION 2: SCOPING REQUIREMENTS

***11B*-201 Application**

***11B*-201.1 Scope.** All areas of newly designed and newly constructed buildings and facilities and altered portions of existing buildings and facilities shall comply with these requirements.

***11B*-201.2 Application based on building or facility use.** Where a site, building, facility, room, or space contains more than one use, each portion shall comply with the applicable requirements for that use.

***11B*-201.3 Temporary and permanent structures.** These requirements shall apply to temporary and permanent buildings and facilities.

11B*-201.4 *Construction support facilities. *These requirements shall apply to temporary or permanent construction support facilities for uses and activities not directly associated with the actual processes of construction, including but not limited to offices, meeting rooms, plan rooms, other administrative or support functions. When provided, toilet and bathing facilities serving construction support facilities shall comply with Section 11B-213. When toilet and bathing facilities serving construction support facilities are provided by portable units, at least one of each type shall be accessible and connected to the construction support facilities it serves by an accessible route.*

Exception: *During construction an accessible route shall not be required between site arrival points or the boundary of the area of construction and the entrance to the construction support facilities if the only means of access between them is a vehicular way not providing pedestrian access.*

***11B*-202 Existing buildings and facilities**

***11B*-202.1 General.** Additions and alterations to existing buildings or facilities shall comply with *Section 11B*-202.

***11B*-202.2 Additions.** Each addition to an existing building or facility shall comply with the requirements for new construction *and* shall comply with *Section 11B*-202.4.

***11B*-202.3 Alterations.** Where existing elements or spaces are altered, each altered element or space shall comply with the applicable requirements of *Division 2, including Section 11B-202.4.*

Exceptions:

1. ***Reserved.***
2. ***Technically infeasible.*** In alterations, where *the enforcing authority determines* compliance with applicable requirements is technically infeasible, the alteration shall *provide equivalent facilitation or* comply with the requirements to the maximum extent feasible. *The details of the finding that full compliance with the requirements is technically infeasible shall be recorded and entered into the files of the enforcing agency.*
3. Residential dwelling units not required to be accessible in compliance with *this code* shall not be required to comply with *Section 11B*-202.3.

***11B*-202.3.1 Prohibited reduction in access.** An alteration that decreases or has the effect of decreasing the accessibility of a building or facility below the requirements for new construction at the time of the alteration is prohibited.

***11B*-202.3.2 Extent of application.** An alteration of an existing element, space, or area of a building or facility shall not impose a requirement for accessibility greater than required for new construction.

***11B*-202.3.3 Alteration of single elements.** *If alterations of single elements, when considered together, amount to an alteration of a room or space in a building or facility, the entire room or space shall be made accessible.*

11B*-202.4 *Path of travel requirements in alterations, additions and structural repairs. *When alterations or additions are made to existing buildings or facilities, an accessible path of travel to the specific area of alteration or addition shall be provided. The primary accessible path of travel shall include:*

1. *A primary entrance to the building or facility,*
2. *Toilet and bathing facilities serving the area,*
3. *Drinking fountains serving the area,*
4. *Public telephones serving the area, and*
5. *Signs.*

Exceptions:

1. Residential dwelling units shall comply with *Section 11B-233.3.4.2.*
2. *If the following elements of a path of travel have been constructed or altered in compliance with the accessibility requirements of the immediately preceding edition of the California Building Code, it shall not be required to retrofit such elements to reflect the incremental changes in this code solely because of an alteration to an area served by those elements of the path of travel:*
   1. *A primary entrance to the building or facility,*
   2. *Toilet and bathing facilities serving the area,*
   3. *Drinking fountains serving the area,*
   4. *Public telephones serving the area, and*
   5. *Signs.*
3. *Additions or alterations to meet accessibility requirements consisting of one or more of the following items shall be limited to the actual scope of work of the project and shall not be required to comply with Section 11B-202.4:*
   1. *Altering one building entrance.*
   2. *Altering one existing toilet facility.*

***11B*-203 General exceptions**

***11B*-203.1 General.** Sites, buildings, facilities, and elements are exempt from these requirements to the extent specified by *11B*-203.

***11B*-203.2 Construction sites.** Structures and sites directly associated with the actual processes of construction, including but not limited to, scaffolding, bridging, materials hoists, materials storage and construction trailers shall not be required to comply with these requirements or to be on an accessible route. Portable toilet units provided for use exclusively by construction personnel on a construction site shall not be required to comply with *Section 11B*-213 or to be on an accessible route.

***11B*-203.3 Raised areas.** Areas raised primarily for purposes of security, life safety, or fire safety, including but not limited to, observation or lookout galleries, prison guard towers, fire towers or life guard stands shall not be required to comply with these requirements or to be on an accessible route.

***11B*-203.4 Limited access spaces.** Spaces *not customarily occupied and* accessed only by ladders, catwalks, crawl spaces or very narrow passageways shall not be required to comply with these requirements or to be on an accessible route.

***11B*-203.5 Machinery spaces.** Spaces frequented only by service personnel for maintenance, repair or occasional monitoring of equipment shall not be required to comply with these requirements or to be on an accessible route. Machinery spaces include, but are not limited to, elevator pits or elevator penthouses; mechanical, electrical or communications equipment rooms; piping or equipment catwalks; water or sewage treatment pump rooms and stations; electric substations and transformer vaults; and highway and tunnel utility facilities.

***11B*-203.6 Single occupant structures.** Single occupant structures accessed only by passageways below grade or elevated above standard curb height, including but not limited to, toll booths that are accessed only by underground tunnels, shall not be required to comply with these requirements or to be on an accessible route.

***11B*-203.7 Detention and correctional facilities.** In detention and correctional facilities, common use areas that are used only by inmates or detainees and security personnel and that do not serve holding cells or housing cells required to comply with *Section 11B*-232, shall not be required to comply with these requirements or to be on an accessible route.

***11B*-203.8 Residential facilities.** In *public housing* residential facilities, common use areas that do not serve residential dwelling units required to provide mobility features complying with *Sections 11B*-809.2 through *11B*-809.4 *and adaptable features complying with Chapter 11A, Division IV* shall not be required to comply with these requirements or to be on an accessible route.

***11B*-203.9 Employee *workstations*.** *Employee workstations shall be on an accessible route complying with Division 4. Spaces and elements within employee workstations shall only be required to comply with Sections 11B-207.1, 11B-215.3, 11B-302, 11B-303, and 11B-404.2.3. Common use circulation paths within employee workstations shall comply with Section 11B-206.2.8.*

***11B*-203.10 Raised refereeing, judging and scoring areas.** Raised structures used solely for refereeing, judging or scoring a sport shall not be required to comply with these requirements or to be on an accessible route. *An accessible route complying with Division 4 shall be provided to the ground- or floor-level entry points, where provided, of stairs, ladders, or other means of reaching the raised elements or areas.*

***11B*-203.11 Water slides.** Water slides shall not be required to comply with these requirements or to be on an accessible route. *An accessible route complying with Division 4 shall be provided to the ground- or floor-level entry points, where provided, of stairs, ladders or other means of reaching the raised elements or areas.*

***11B*-203.12 Animal containment areas.** Animal containment areas that are not for public use shall not be required to comply with these requirements or to be on an accessible route. *Animal containment areas for public use shall be on an accessible route.*

***11B*-203.13 Raised boxing or wrestling rings.** Raised boxing or wrestling rings shall not be required to comply with these requirements or to be on an accessible route. *An accessible route complying with Division 4 shall be provided to the ground- or floor-level entry points, where provided, of stairs, ladders or other means of reaching the raised elements or areas.*

***11B*-203.14 Raised diving boards and diving platforms.** Raised diving boards and diving platforms shall not be required to comply with these requirements or to be on an accessible route. *An accessible route complying with Division 4 shall be provided to the ground- or floor-level entry points, where provided, of stairs, ladders or other means of reaching the raised elements or areas.*

***11B*-204 Protruding objects**

***11B*-204.1 General.** Protruding objects on circulation paths shall comply with *Section 11B*-307.

Exceptions:

1. Within areas of sport activity, protruding objects on circulation paths shall not be required to comply with *Section 11B*-307.
2. Within play areas, protruding objects on circulation paths shall not be required to comply with *Section 11B*-307 provided that ground level accessible routes provide vertical clearance in compliance with *Section 11B*-1008.2.

***11B*-205 Operable parts**

***11B*-205.1 General.** Operable parts on accessible elements, accessible routes, and in accessible rooms and spaces shall comply with *Section 11B*-309.

Exceptions:

1. Operable parts that are intended for use only by service or maintenance personnel shall not be required to comply with *Section 11B*-309.
2. Electrical or communication receptacles serving a dedicated use shall not be required to comply with *Section 11B*-309.
3. ***Reserved.***
4. Floor electrical receptacles shall not be required to comply with *Section 11B*-309.
5. HVAC diffusers shall not be required to comply with *Section 11B*-309.
6. Except for light switches, where redundant controls are provided for a single element, one control in each space shall not be required to comply with *Section 11B*-309.
7. Cleats and other boat securement devices shall not be required to comply with *Section 11B*-309.3.
8. Exercise machines and exercise equipment shall not be required to comply with *Section 11B*-309.

***11B*-206 Accessible routes**

***11B*-206.1 General.** Accessible routes shall be provided in accordance with *Section 11B*-206 and shall comply with *Division 4.*

***11B*-206.2 Where required.** Accessible routes shall be provided where required by *Section 11B*-206.2.

***11B*-206.2.1 Site arrival points.** At least one accessible route shall be provided within the site from accessible parking spaces and accessible passenger loading zones; public streets and sidewalks; and public transportation stops to the accessible building or facility entrance they serve. *Where more than one route is provided, all routes must be accessible.*

Exceptions:

1. *Reserved.*
2. An accessible route shall not be required between site arrival points and the building or facility entrance if the only means of access between them is a vehicular way not providing pedestrian access.
3. *General circulation paths shall be permitted when located in close proximity to an accessible route.*

***11B*-206.2.2 Within a site.** At least one accessible route shall connect accessible buildings, accessible facilities, accessible elements, and accessible spaces that are on the same site.

Exception: An accessible route shall not be required between accessible buildings, accessible facilities, accessible elements, and accessible spaces if the only means of access between them is a vehicular way not providing pedestrian access.

***11B*-206.2.3 Multi-story buildings and facilities.** At least one accessible route shall connect each story and mezzanine in multi-story buildings and facilities.

Exceptions:

1. *The following types of privately funded multi-story buildings do not require a ramp or elevator above and below the first floor:*
   1.1. *Multi-storied office buildings (other than the professional office of a health care provider) and passenger vehicle service stations less than three stories high or less than 3,000 square feet (279 m²) per story.*
   1.2. *Any other privately funded multi-storied building that is not a shopping center, shopping mall or the professional office of a health care provider, or a terminal, depot or other station used for specified public transportation, or an airport passenger terminal and that is less than three stories high or less than 3,000 square feet (279 m²) per story if a reasonable portion of all facilities and accommodations normally sought and used by the public in such a building are accessible to and usable by persons with disabilities.*
2. ***Reserved.***
3. In detention and correctional facilities, an accessible route shall not be required to connect stories where cells with mobility features required to comply with *Section 11B*-807.2, all common use areas serving cells with mobility features required to comply with *Section 11B*-807.2, and all public use areas are on an accessible route.
4. In residential facilities, an accessible route shall not be required to connect stories where residential dwelling units with mobility features required to comply with *Sections 11B*-809.2 through *11B*-809.4, *residential dwelling units with adaptable features complying with Chapter 11A, Division IV,* all common use areas serving residential dwelling units with mobility features required to comply with *Sections 11B*-809.2 through *11B*-809.4, *all common use areas serving residential dwelling units with adaptable features complying with Chapter 11A, Division IV,* and public use areas serving residential dwelling units are on an accessible route.
5. Within multi-story transient lodging guest rooms with mobility features required to comply with *Section 11B*-806.2, an accessible route shall not be required to connect stories provided that spaces complying with *Section 11B*-806.2 are on an accessible route and sleeping accommodations for two persons minimum are provided on a story served by an accessible route.
6. In air traffic control towers, an accessible route shall not be required to serve the cab and *the equipment areas on* the floor immediately below the cab.
7. ***Reserved.***

***11B*-206.2.3.1 Stairs and escalators in existing buildings.** In alterations and additions, where an escalator or stair is provided where none existed previously and major structural modifications are necessary for the installation, an accessible route shall be provided between the levels served by the escalator or stair unless exempted by *Section 11B*-206.2.3 Exceptions 1 through 7.

***11B*-206.2.3.2 Distance to elevators.** *In new construction of buildings where elevators are required by Section 11B-206.2.3, and which exceed 10,000 square feet (929 m²) on any floor, an accessible means of vertical access via ramp, elevator or lift shall be provided within 200 feet (60,960 mm) of travel of each stair and each escalator. In existing buildings that exceed 10,000 square feet (929 m²) on any floor and in which elevators are required by Section 11B-206.2.3, whenever a newly constructed means of vertical access is provided via stairs or an escalator, an accessible means of vertical access via ramp, elevator or lift shall be provided within 200 feet (60,960 mm) of travel of each new stair or escalator.*

Exception: *Stairs used solely for emergency egress.*

***11B*-206.2.4 Spaces and elements.** At least one accessible route shall connect accessible building or facility entrances with all accessible spaces and elements within the building or facility, *including mezzanines,* which are otherwise connected by a circulation path unless exempted by *Section 11B*-206.2.3 Exceptions 1 through 7.

Exceptions:

1. ***Reserved.***
2. In assembly areas with fixed seating required to comply with *Section 11B*-221, an accessible route shall not be required to serve fixed seating where wheelchair spaces required to be on an accessible route are not provided.
3. ***Reserved.***

11B*-206.2.5 *Restaurants, cafeterias, banquet facilities and bars. In *restaurants, cafeterias, banquet facilities, bars, and similar facilities,* an accessible route shall be provided to all *functional* areas, including raised or sunken areas, and outdoor areas.

Exceptions:

1. In *alterations of* buildings or facilities not required to provide an accessible route between stories, an accessible route shall not be required to a mezzanine dining area where the mezzanine contains less than 25 percent of the total combined area for seating and dining and where the same decor and services are provided in the accessible area.
2. ***Reserved.***
3. In sports facilities, tiered dining areas providing seating required to comply with *Section 11B*-221 shall be required to have accessible routes serving at least 25 percent of the dining area provided that accessible routes serve seating complying

THE CITY OF LOS ANGELES OR ITS OFFICERS OR AGENTS SHALL NOT BE RESPONSIBLE FOR THE ACCURACY OR COMPLETENESS OF ELECTRONIC COPIES OF THIS PLAN SHEET.
FILE PATH: A360://Studio City Recreation Center/SCRC-Project Model_Central_Final.rvt
SHEET ISSUE DATE: 01/01/14
REVISION DATES (DESIGN STAGE ONLY)
CITY OF LOS ANGELES DEPARTMENT OF PUBLIC WORKS BUREAU OF ENGINEERING
ENGINEERING
CITY OF LOS ANGELES
NO. | REVISION DESCRIPTION | DATE | BY
BUILDING NO. -
INDEX NO. RP-300106
LICENSED ARCHITECT TED ALLEN CONEXANT CALIFORNIA LIC. NO. C 23333 REGISTERED STATE OF CALIFORNIA
CITY ENGINEER DATE:
TED ALLEN, PE 1-24-2019
ARCHITECTURAL DIVISION
ARCHITECT: ROBERT LOMELIN LIC. NO.: C 23333 1-24-2019
DESIGNED BY: Z. AKHTER, M. CHAVARRIA, A. KIM, M. LAM 1-24-2019
DRAWN BY: Z. AKHTER, M. CHAVARRIA, A. KIM 1-24-2019
CHECKED BY: ROBERT LOMELIN 1-24-2019
APPROVED BY: MAHMOOD KARIMZADEH, AIA, DEPUTY CITY ENGINEER 1-24-2019
CLIENT: DEPARTMENT OF RECREATION AND PARKS
GENERAL MANAGER: MICHAEL A. SHULL
SHEET TITLE: TITLE 24- DISABLED ACCESS REQUIREMENTS
PROJECT: STUDIO CITY RECREATION CENTER
ADDRESS: 12621 RYE STREET, STUDIO CITY, CA 91604
WORK ORDER NO. E170267B
PLAN FILE NO. 860
DRAWING NO. G101
SHEET 9 OF SHEETS 211
PLOTTED: 7/1/2019 11:34:16 AM

with *Section 11B*-221 and each tier is provided with the same services.

***11B*-206.2.6 Performance areas.** Where a circulation path directly connects a performance area to an assembly seating area, an accessible route shall directly connect the assembly seating area with the performance area. An accessible route shall be provided from performance areas to ancillary areas or facilities used by performers unless exempted by *Section 11B*-206.2.3 Exceptions 1 through 7.

***11B*-206.2.7 Press boxes.** Press boxes in assembly areas shall be on an accessible route.

Exceptions:

1. An accessible route shall not be required to press boxes in bleachers that have points of entry at only one level provided that the aggregate area of all press boxes is 500 square feet (46 m^2) maximum.
2. An accessible route shall not be required to free-standing press boxes that are elevated above grade 12 feet (3660 mm) minimum provided that the aggregate area of all press boxes is 500 square feet (46 m^2) maximum.

***11B*-206.2.8 Employee work areas.** Common use circulation paths within employee work areas shall comply with *Section 11B*-402.

Exceptions:

1. ***Reserved.***
2. Common use circulation paths located within employee work areas that are an integral component of work area equipment shall not be required to comply with *Section 11B*-402.
3. Common use circulation paths located within exterior employee work areas that are fully exposed to the weather shall not be required to comply with *Section 11B*-402.

***11B*-206.2.9 Amusement rides.** Amusement rides required to comply with *Section 11B*-234 shall provide accessible routes in accordance with *Section 11B*-206.2.9. Accessible routes serving amusement rides shall comply with *Division 4* except as modified by *Section 11B*-1002.2.

***11B*-206.2.9.1 Load and unload areas.** Load and unload areas shall be on an accessible route. Where load and unload areas have more than one loading or unloading position, at least one loading and unloading position shall be on an accessible route.

***11B*-206.2.9.2 Wheelchair spaces, ride seats designed for transfer, and transfer devices.** When amusement rides are in the load and unload position, wheelchair spaces complying with *Section 11B*-1002.4, amusement ride seats designed for transfer complying with *Section 11B*-1002.5, and transfer devices complying with *Section 11B*-1002.6 shall be on an accessible route.

***11B*-206.2.10 Recreational boating facilities.** Boat slips required to comply with *Section 11B*-235.2 and boarding piers at boat launch ramps required to comply with *Section 11B*-235.3 shall be on an accessible route. Accessible routes serving recreational boating facilities shall comply with *Division 4*, except as modified by *Section 11B*-1003.2.

***11B*-206.2.11 Bowling lanes.** Where bowling lanes are provided, at least 5 percent, but no fewer than one of each type of bowling lane, shall be on an accessible route.

***11B*-206.2.12 Court sports.** In court sports, at least one accessible route shall directly connect both sides of the court.

***11B*-206.2.13 Exercise machines and equipment.** Exercise machines and equipment required to comply with *11B*-236 shall be on an accessible route.

***11B*-206.2.14 Fishing piers and platforms.** Fishing piers and platforms shall be on an accessible route. Accessible routes serving fishing piers and platforms shall comply with *Division 4* except as modified by *Section 11B*-1005.1.

***11B*-206.2.15 Golf facilities.** At least one accessible route shall connect accessible elements and spaces within the boundary of the golf course. In addition, accessible routes serving golf car rental areas; bag drop areas; course weather shelters complying with *Section 11B*-238.2.3; course toilet rooms; and practice putting greens, practice teeing grounds, and teeing stations at driving ranges complying with *Section 11B*-238.3 shall comply with *Division 4* except as modified by *Section 11B*-1006.2.

Exception: Golf car passages complying with *Section 11B*-1006.3 shall be permitted to be used for all or part of accessible routes required by *Section 11B*-206.2.15.

***11B*-206.2.16 Miniature golf facilities.** Holes required to comply with *Section 11B*-239.2, including the start of play, shall be on an accessible route. Accessible routes serving miniature golf facilities shall comply with *Division 4* except as modified by *Section 11B*-1007.2.

***11B*-206.2.17 Play areas.** Play areas shall provide accessible routes in accordance with *Section 11B*-206.2.17. Accessible routes serving play areas shall comply with *Division 4* except as modified by *Section 11B*-1008.2.

***11B*-206.2.17.1 Ground level and elevated play components.** At least one accessible route shall be provided within the play area. The accessible route shall connect ground level play components required to comply with *Section 11B*-240.2.1 and elevated play components required to comply with *Section 11B*-240.2.2, including entry and exit points of the play components.

***11B*-206.2.17.2 Soft contained play structures.** Where three or fewer entry points are provided for soft contained play structures, at least one entry point shall be on an accessible route. Where four or more entry points are provided for soft contained play structures, at least two entry points shall be on an accessible route.

11B*-206.2.18 *Area of sport activity. *An accessible route shall be provided to the boundary of each area of sport activity.*

***11B*-206.3 Location.** Accessible routes shall coincide with or be located in the same area as general circulation paths. Where circulation paths are interior, required accessible routes shall also be interior. *An accessible route shall not pass through kitchens, storage rooms, restrooms, closets or other spaces used for similar purposes, except as permitted by Chapter 10.*

***11B*-206.4 Entrances.** Entrances shall be provided in accordance with *Section 11B*-206.4. Entrance doors, doorways, and gates shall comply with *Section 11B*-404 and shall be on an accessible route complying with *Section 11B*-402.

Exceptions:

1. ***Reserved.***
2. ***Reserved.***

11B*-206.4.1 Entrances *and exterior ground floor exits. *All* entrances *and exterior ground-floor exits to buildings and facilities* shall comply with *Section 11B*-404.

Exceptions:

1. *Exterior ground floor exits serving smoke-proof enclosures, stairwells, and exit doors serving stairs only shall not be required to comply with Section 11B-404.*
2. *Exits in excess of those required by Chapter 10, and which are more than 24 inches (610 mm) above grade shall not be required to comply with Section 11B-404. Directional signs shall comply with Chapter 10, Section 1009.10.*

***11B*-206.4.2 Parking structure entrances.** Where direct access is provided for pedestrians from a parking structure to a building or facility entrance, each direct access to the building or facility entrance shall comply with *Section 11B*-404.

***11B*-206.4.3 Entrances from tunnels or elevated walkways.** Where direct access is provided for pedestrians from a pedestrian tunnel or elevated walkway to a building or facility, *all entrances* to the building or facility from each tunnel or walkway shall comply with *Section 11B*-404.

***11B*-206.4.4 Transportation facilities.** In addition to the requirements of *Sections 11B*-206.4.2, *11B*-206.4.3, and *11B*-206.4.5 through *11B*-206.4.9, transportation facilities shall provide entrances in accordance with *Section 11B*-206.4.4.

***11B*-206.4.4.1 Location.** In transportation facilities, where different entrances serve different transportation fixed routes or groups of fixed routes, *entrances* serving each fixed route or group of fixed routes shall comply with *Section 11B*-404.

Exception: Entrances to key stations and existing intercity rail stations retrofitted in accordance with 49 CFR 37.49 or 49 CFR 37.51 shall not be required to comply with *Section 11B*-206.4.4.1.

***11B*-206.4.4.2 Direct connections.** Direct connections to other facilities shall provide an accessible route complying with *Section 11B*-404 from the point of connection to boarding platforms and all transportation system elements required to be accessible. Any elements provided to facilitate future direct connections shall be on an accessible route connecting boarding platforms and all transportation system elements required to be accessible.

Exception: In key stations and existing intercity rail stations, existing direct connections shall not be required to comply with *Section 11B*-404.

***11B*-206.4.4.3 Key stations and intercity rail stations.** Key stations and existing intercity rail stations required by Subpart C of 49 CFR part 37 to be altered, shall have *entrances* complying with *Section 11B*-404.

***11B*-206.4.5 Tenant spaces.** *All entrances* to each tenancy in a facility shall comply with *Section 11B*-404.

Exception: Self-service storage facilities not required to comply with *Section 11B*-225.3 shall not be required to be on an accessible route.

***11B*-206.4.6 Residential dwelling unit primary entrance.** In residential dwelling units, at least one primary entrance shall comply with *Section 11B*-404. The primary entrance to a residential dwelling unit shall not be to a bedroom.

***11B*-206.4.7 Restricted entrances.** Where restricted entrances are provided to a building or facility, *all restricted entrances* to the building or facility shall comply with *Section 11B*-404.

***11B*-206.4.8 Service entrances.** If a service entrance is the only entrance to a building or to a tenancy in a facility, that entrance shall comply with *Section 11B*-404. *In existing buildings and facilities, a service entrance shall not be the sole accessible entrance unless it is the only entrance to a building or facility.*

***11B*-206.4.9 Entrances for inmates or detainees.** Where entrances used only by inmates or detainees and security personnel are provided at judicial facilities, detention facilities, or correctional facilities, at least one such entrance shall comply with *Section 11B*-404.

11B*-206.4.10 *Medical care and long-term care facilities. *Weather protection by a canopy or roof overhang shall be provided at a minimum of one accessible entrance to licensed medical care and licensed long-term care facilities where the period of stay may exceed twenty-four hours. The area of weather protection shall include the passenger loading zone complying with Section 11B-209.3 and the accessible route from the passenger loading zone to the accessible entrance it serves.*

***11B*-206.5 Doors, doorways, and gates.** Doors, doorways and gates providing user passage shall be provided in accordance with *Section 11B*-206.5.

***11B*-206.5.1 Entrances.** Each entrance to a building or facility required to comply with *Section 11B*-206.4 shall *comply* with *Section 11B*-404.

***11B*-206.5.2 Rooms and spaces.** Within a building or facility, *every door, doorway or gate serving rooms and spaces* complying with *this chapter* shall comply with *Section 11B*-404.

***11B*-206.5.3 Transient lodging facilities.** In transient lodging facilities, entrances, doors, and doorways providing user passage into and within guest rooms that are not required to provide mobility features complying with *Section 11B*-806.2 shall comply with *Section 11B*-404.2.3.

Exception: Shower and sauna doors in guest rooms that are not required to provide mobility features complying with *Section 11B*-806.2 shall not be required to comply with *Section 11B*-404.2.3.

***11B*-206.5.4 Residential dwelling units.** In residential dwelling units required to provide mobility features complying with *Sections 11B*-809.2 through *11B*-809.4, all doors and doorways providing user passage shall comply with *Section 11B*-404.

***11B*-206.6 Elevators.** Elevators provided for passengers shall comply with *Section 11B*-407. Where multiple elevators are provided, each elevator shall comply with *Section 11B*-407.

Exceptions:

1. In a building or facility permitted to use the exceptions to *Section 11B*-206.2.3 or permitted by *Section 11B*-206.7 to use a platform lift, elevators complying with *Section 11B*-408 shall be permitted.
2. Elevators complying with *Section 11B*-408 or *11B*-409 shall be permitted in multi-story residential dwelling units. *Elevators provided as a means of access within a private residence shall be installed so that they are not accessible to the general public or to other occupants of the building.*
3. *Destination-oriented elevators complying with Section 11B-411 shall be permitted.*

***11B*-206.6.1 Existing elevators.** Where elements of existing elevators are altered, the same element shall also be altered in all elevators that are programmed to respond to the same hall call control as the altered elevator and shall comply with the requirements of *Section 11B*-407 for the altered element.

Exception: *Where a group of existing elevators are altered into a destination-oriented elevator system, or where elements of existing destination-oriented elevators are altered, the same elements shall also be altered in all elevators that are programmed to respond to the same call console or group of call consoles and shall comply with the requirements of Section 11B-411 for the altered elements.*

***11B*-206.7 Platform lifts.** Platform lifts shall comply with *Section 11B*-410. Platform lifts shall be permitted as a component of an accessible route in new construction in accordance with *Section 11B*-206.7. Platform lifts shall be permitted as a component of an accessible route in an existing building or facility.

***11B*-206.7.1 Performance areas and speakers' platforms.** Platform lifts shall be permitted to provide accessible routes to performance areas and speakers' platforms.

***11B*-206.7.2 Wheelchair spaces.** Platform lifts shall be permitted to provide an accessible route to comply with the wheelchair space dispersion and line-of-sight requirements of *Sections 11B*-221 and *11B*-802.

***11B*-206.7.3 Incidental spaces.** Platform lifts shall be permitted to provide an accessible route to incidental spaces which are not public use spaces and which are occupied by five persons maximum.

***11B*-206.7.4 Judicial spaces.** Platform lifts shall be permitted to provide an accessible route to: jury boxes and witness stands; raised courtroom stations including, judges' benches, clerks' stations, bailiffs' stations, deputy clerks' stations, and court reporters' stations; and to depressed areas such as the well of a court.

***11B*-206.7.5 Existing site constraints.** Platform lifts shall be permitted where existing exterior site constraints make use of a ramp or elevator infeasible.

***11B*-206.7.6 Guest rooms and residential dwelling units.** Platform lifts shall be permitted to connect levels within transient lodging guest rooms required to provide mobility features complying with *Section 11B*-806.2 or residential dwelling units required to provide mobility features complying with *Sections 11B*-809.2 through *11B*-809.4 *and adaptable features complying with Chapter 11A, Division IV.*

***11B*-206.7.7 Amusement rides.** Platform lifts shall be permitted to provide accessible routes to load and unload areas serving amusement rides.

***11B*-206.7.8 Play areas.** Platform lifts shall be permitted to provide accessible routes to play components or soft contained play structures.

***11B*-206.7.9 Team or player seating.** Platform lifts shall be permitted to provide accessible routes to team or player seating areas serving areas of sport activity.

***11B*-206.7.10 Recreational boating facilities and fishing piers and platforms.** Platform lifts shall be permitted to be used instead of gangways that are part of accessible routes serving recreational boating facilities and fishing piers and platforms.

***11B*-206.8 Security barriers.** Security barriers, including but not limited to, security bollards and security check points, shall not obstruct a required accessible route or accessible means of egress.

Exception: Where security barriers incorporate elements that cannot comply with these requirements such as certain metal detectors, fluoroscopes, or other similar devices, the accessible route shall be permitted to be located adjacent to security screening devices. The accessible route shall permit persons with disabilities passing around security barriers to maintain visual contact with their personal items to the same extent provided others passing through the security barrier.

***11B*-207 Accessible means of egress**

***11B*-207.1 General.** Means of egress shall comply with *Chapter 10, Section 1009*.

Exceptions:

1. Where means of egress are permitted by local building or life safety codes to share a common path of egress travel, accessible means of egress shall be permitted to share a common path of egress travel.
2. Areas of refuge shall not be required in detention and correctional facilities.

***11B*-207.2 Platform lifts.** Standby power shall be provided for platform lifts permitted by *Chapter 10, Section 1009.5* to serve as a part of an accessible means of egress. *To ensure continued operation in case of primary power loss, platform lifts shall be provided with standby power or with self-rechargeable battery power that provides sufficient power to operate all platform lift functions for a minimum of five upward and downward trips.*

***11B*-208 Parking spaces**

***11B*-208.1 General.** Where parking spaces are provided, parking spaces shall be provided in accordance with *Section 11B*-208. *For the purposes of this section, electric vehicle charging stations are not parking spaces; see Section 11B-228.*

Exception: Parking spaces used exclusively for buses, trucks, other delivery vehicles, or vehicular impound shall not be required to comply with *Section 11B*-208 provided that lots accessed by the public are provided with a passenger loading zone complying with *Section 11B*-503.

***11B*-208.2 Minimum number.** Parking spaces complying with *Section 11B*-502 shall be provided in accordance with Table *11B*-208.2 except as required by *Sections 11B*-208.2.1, *11B*-208.2.2, and *11B*-208.2.3. Where more than one parking facility is provided on a site, the number of accessible spaces provided on the site shall be calculated according to the number of spaces required for each parking facility.

***11B*-208.2.1 Hospital outpatient facilities.** Ten percent of patient and visitor parking spaces provided to serve hospital outpatient facilities, *and free-standing buildings providing outpatient clinical services of a hospital,* shall comply with *Section 11B*-502.

***11B*-208.2.2 Rehabilitation facilities and outpatient physical therapy facilities.** Twenty percent of patient and visitor parking spaces provided to serve rehabilitation facilities specializing in treating conditions that affect mobility and outpatient physical therapy facilities shall comply with *Section 11B*-502.

***11B*-208.2.3 Residential facilities.** Parking spaces provided to serve residential facilities shall comply with *Section 11B*-208.2.3.

***11B*-208.2.3.1 Parking for residents.** Where at least one parking space is provided for each residential dwelling unit, at least one parking space complying with *Section 11B*-502 shall be provided for each residential dwelling unit required to provide mobility features complying with *Sections 11B*-809.2 through *11B*-809.4. *Where fewer than one parking space is provided for each residential dwelling unit, parking spaces complying with Section 11B-502 shall be provided in accordance with Table 11B-208.2.*

***11B*-208.2.3.2 Additional parking spaces for residents.** Where the total number of parking spaces provided for each residential dwelling unit exceeds one parking space per residential dwelling unit, 2 percent, but no fewer than one space, of all the parking spaces not covered by *Section 11B*-208.2.3.1 shall comply with *Section 11B*-502.

***11B*-208.2.3.3 Parking for guests, employees, and other non-residents.** Where parking spaces are provided for persons other than residents, parking shall be provided in accordance with Table *11B*-208.2.

Note: *When assigned parking is provided, Chapter 11A indicates designated accessible parking for the adaptable residential dwelling units shall be provided on requests of residents with disabilities on the same terms and with the full range of choices (e.g., off-street parking, carport or garage) that are available to other residents.*

TABLE *11B*-208.2
PARKING SPACES

TOTAL NUMBER OF PARKING SPACES PROVIDED IN PARKING FACILITY	MINIMUM NUMBER OF REQUIRED ACCESSIBLE PARKING SPACES
1 to 25	1
26 to 50	2
51 to 75	3
76 to 100	4
101 to 150	5
151 to 200	6
201 to 300	7
301 to 400	8
401 to 500	9
501 to 1000	2 percent of total
1001 and over	20, plus 1 for each 100, or fraction thereof, over 1000

***11B*-208.2.4 Van parking spaces.** For every six or fraction of six parking spaces required by *Section 11B*-208.2 to comply with *Section 11B*-502, at least one shall be a van parking space complying with *Section 11B*-502.

***11B*-208.3 Location.** Parking facilities shall comply with *Section 11B*-208.3.

***11B*-208.3.1 General.** Parking spaces complying with *Section 11B*-502 that serve a particular building or facility shall be located on the shortest accessible route from parking to an entrance complying with *Section 11B*-206.4. Where parking serves more than one accessible entrance, parking spaces complying with *Section 11B*-502 shall be dispersed and located on the shortest accessible route to the accessible entrances. In parking facilities that do not serve a particular building or facility, parking spaces complying with *Section 11B*-502 shall be located on the shortest accessible route to an accessible pedestrian entrance of the parking facility.

Exceptions:

1. All van parking spaces shall be permitted to be grouped on one level within a multi-story parking facility.
2. Parking spaces shall be permitted to be located in different parking facilities if substantially equivalent or greater accessibility is provided in terms of distance from an accessible entrance or entrances, parking fee, and user convenience.

***11B*-208.3.2 Residential facilities.** In residential facilities containing residential dwelling units required to provide mobility features complying with *Sections 11B*-809.2 through *11B*-809.4, *and adaptable features complying with Chapter 11A, Division IV,* parking spaces provided in accordance with *Section 11B*-208.2.3.1 shall be located on the shortest accessible route to the residential dwelling unit entrance they serve. Spaces provided in accordance with *Section 11B*-208.2.3.2 shall be dispersed throughout all types of parking provided for the residential dwelling units.

Exception: Parking spaces provided in accordance with *Section 11B*-208.2.3.2 shall not be required to be dispersed throughout all types of parking if substantially equivalent or greater accessibility is provided in terms of distance from an accessible entrance, parking fee, and user convenience.

11B*-208.3.3 *Private garages accessory to residential dwelling units. *Private garages accessory to residential dwelling units shall comply with Section 11B-208.3. Private garages include individual garages and multiple individual garages grouped together.*

***11B*-208.3.3.1** *Detached private garages accessory to residential dwelling units shall be accessible as required by Section 11B-208.3.*

***11B*-208.3.3.2** *Attached private garages directly serving a single residential dwelling unit shall provide at least one of the following options:*

1. *A door leading directly from the residential dwelling unit which immediately enters the garage.*
2. *An accessible route from the residential dwelling unit to an exterior door entering the garage.*
3. *An accessible route from the residential dwelling unit's primary entry door to the vehicular entrance at the garage.*

***11B*-209 Passenger *drop-off and* loading zones and bus stops**

***11B*-209.1 General.** Passenger *drop-off and* loading zones shall be provided in accordance with *Section 11B*-209.

***11B*-209.2 Type.** Where provided, passenger *drop-off and* loading zones shall comply with *Section 11B*-209.2.

***11B*-209.2.1 Passenger *drop-off and* loading zones.** Passenger *drop-off and* loading zones, except those required to comply with *Sections 11B*-209.2.2 and *11B*-209.2.3, shall provide at least one passenger *drop-off and* loading zone complying with *Section 11B*-503 in every continuous 100 linear feet (30480 mm) of *drop-off and* loading zone space, or fraction thereof.

***11B*-209.2.2 Bus loading zones.** In bus loading zones restricted to use by designated or specified public transportation vehicles, each bus bay, bus stop, or other area designated for lift or ramp deployment shall comply with *Section 11B*-810.2.

***11B*-209.2.3 On-street bus stops.** On-street bus stops shall comply with *Section 11B*-810.2 to the maximum extent practicable.

***11B*-209.3 Medical care and long-term care facilities.** At least one passenger *drop-off and* loading zone complying with *Section 11B*-503 shall be provided at an accessible entrance to licensed medical care and licensed long-term care facilities where the period of stay *may exceed* twenty-four hours.

***11B*-209.4 Valet parking.** Parking facilities that provide valet parking services shall provide at least one passenger *drop-off and* loading zone complying with *Section 11B*-503. *The parking requirements of Section 11B-208.1 apply to facilities with valet parking.*

***11B*-209.5 Mechanical access parking garages.** Mechanical access parking garages shall provide at least one passenger *drop-off and* loading zone complying with *Section 11B*-503 at vehicle drop-off and vehicle pick-up areas.

***11B*-210 Stairways**

***11B*-210.1 General.** Interior and exterior stairs shall comply with *Section 11B*-504.

Exceptions:

1. In detention and correctional facilities, stairs that are not located in public use areas shall not be required to comply with *Section 11B*-504.
2. In alterations, stairs between levels that are connected by an accessible route shall not be required to comply with *Section 11B*-504, except that *striping complying with Section 11B-504.4.1 and* handrails complying with *Section 11B*-505 shall be provided when the stairs are altered.

3. In assembly areas, aisle stairs shall not be required to comply with *Section 11B*-504 *except that striping complying with Section 11B-504.4.1 shall be provided.*
4. Stairs that connect play components shall not be required to comply with *Section 11B*-504 *except that striping complying with Section 11B-504.4.1 shall be provided.*

***11B*-211 Drinking fountains**

***11B*-211.1 General.** Where drinking fountains are provided on an exterior site, on a floor, or within a secured area they shall be provided in accordance with *Section 11B*-211.

Exception: In detention or correctional facilities, drinking fountains only serving holding or housing cells not required to comply with *Section 11B*-232 shall not be required to comply with *Section 11B*-211.

***11B*-211.2 Minimum number.** No fewer than two drinking fountains shall be provided. *When provided, one* drinking fountain shall comply with *Sections 11B*-602.1 through *11B*-602.6, *11B-602.8 and 11B-602.9* and one drinking fountain shall comply with *Sections 11B*-602.7 *and 11B-602.9.*

Exception: Where a single drinking fountain complies with *Sections 11B*-602.1 through *11B-602.9*, it shall be permitted to be substituted for two separate drinking fountains.

***11B*-211.3 More than minimum number.** Where more than the minimum number of drinking fountains specified in *Section 11B*-211.2 are provided, 50 percent of the total number of drinking fountains provided shall comply with *Sections 11B*-602.1 through *11B*-602.6, *11B-602.8 and 11B-602.9*, and 50 percent of the total number of drinking fountains provided shall comply with *Sections 11B*-602.7 *and 11B-602.9.*

Exception: Where 50 percent of the drinking fountains yields a fraction, 50 percent shall be permitted to be rounded up or down provided that the total number of drinking fountains complying with *Section 11B*-211 equals 100 percent of drinking fountains.

***11B*-212 Kitchens, kitchenettes, *wet bars* and sinks**

***11B*-212.1 General.** Where provided, kitchens, kitchenettes, *wet bars* and sinks shall comply with *Section 11B*-212.

***11B*-212.2 Kitchens, kitchenettes, *and wet bars*.** Kitchens, kitchenettes *and wet bars* shall comply with *Section 11B*-804.

***11B*-212.3 Sinks.** Where sinks are provided, at least 5 percent, but no fewer than one, of each type provided in each accessible room or space shall comply with *Section 11B*-606.

Exceptions:

1. *Mop, service or scullery* sinks shall not be required to comply with *Section 11B*-212.3.
2. *Scrub sinks, as defined in California Plumbing Code Section 221.0, shall not be required to comply with Section 11B-606.*

***11B*-213 Toilet facilities and bathing facilities**

***11B*-213.1 General.** Where toilet facilities and bathing facilities are provided, they shall comply with *Section 11B*-213. Where toilet facilities and bathing facilities are provided in facilities permitted by *Section 11B*-206.2.3 *Exception* 1 not to connect stories by an accessible route, toilet facilities and bathing facilities shall be provided on a story connected by an accessible route to an accessible entrance.

11B*-213.1.1 *Toilet facilities for designated user groups. *Where separate toilet facilities are provided for the exclusive use of separate user groups, the toilet facilities serving each user group shall comply with Section 11B-213.*

11B-213.2 Toilet rooms and bathing rooms. Where toilet rooms are provided, each toilet room shall comply with *Section 11B*-603. Where bathing rooms are provided, each bathing room shall comply with *Section 11B*-603.

Exceptions:

1. In alterations where it is technically infeasible to comply with *Section 11B*-603, altering existing toilet or bathing rooms shall not be required where a single unisex *(single-user or family)* toilet room or bathing room complying with *Section 11B*-213.2.1 is provided and located in the same area and on the same floor as existing inaccessible toilet or bathing rooms.
2. ***Reserved.***
3. Where multiple single user portable toilet or bathing units are clustered at a single location 5 percent, *but no fewer than one*, of the toilet units and bathing units at each cluster shall comply with *Section 11B*-603. Portable toilet units and bathing units complying with *Section 11B*-603 shall be identified by the International Symbol of Accessibility complying with *Section 11B*-703.7.2.1.
4. Where multiple single user toilet rooms are clustered at a single location, 50 percent, *but no fewer than one*, of the single user toilet rooms for each use at each cluster shall comply with *Section 11B*-603.
5. *Where toilet and bathing rooms are provided in guest rooms that are not required to provide mobility features complying with Section 11B-806.2, toilet and bathing fixtures shall only be required to comply with Section 11B-603.6.*

***11B*-213.2.1 Unisex *(single-user* or family) toilet and unisex *(single-user or family)* bathing rooms.** Unisex *(single-user or family)* toilet rooms shall contain not more than one lavatory, and *not more than* two water closets without urinals or one water closet and one urinal. Unisex *(single-user or family)* bathing rooms shall contain one shower or one shower and one bathtub, one lavatory, and one water closet. Doors to unisex *(single-user or family)* toilet rooms and unisex *(single-user or family)* bathing rooms shall have privacy latches.

11B*-213.2.2 *Unisex (Patient) toilet rooms in medical care and long-term care facilities. *Common-use unisex toilet rooms for exclusive patient use not located within patient bedrooms shall contain a lavatory and one water closet.*

11B*-213.2.3 *Unisex (Patient) bathing rooms in medical care and long-term care facilities. *Common-use unisex bathing rooms for exclusive patient use not located within patient bedrooms shall contain one shower or one bathtub, one lavatory, and one water closet.*

***11B*-213.3 Plumbing fixtures and accessories.** Plumbing fixtures and accessories provided in a toilet room or bathing room required to comply with *Section 11B*-213.2 shall comply with *Section 11B*-213.3.

***11B*-213.3.1 Toilet compartments.** Where toilet compartments are provided, at least *five percent of the toilet compartments, or five percent of the combination of toilet compartments and urinals, but no fewer than* one toilet compartment shall comply with *Section 11B*-604.8.1. In addition to the *compartments* required to comply with *Section 11B*-604.8.1, where six or more toilet compartments are provided, or where the combination of urinals and water closets totals six or more fixtures, *toilet compartments complying with Section 11B-604.8.2 shall be provided in the same quantity as the toilet compartments required to comply with Section 11B-604.8.1.*

***11B*-213.3.2 Water closets.** Where water closets are provided, at least *5 percent but no fewer than* one shall comply with *Section 11B*-604.

***11B*-213.3.3 Urinals.** Where *one or more urinals are* provided, at least *10 percent but no fewer than* one shall comply with *Section 11B*-605.

***11B*-213.3.4 Lavatories.** Where lavatories are provided, at least *10 percent but no fewer than* one shall comply with *Section 11B*-606 and shall not be located in a toilet compartment.

***11B*-213.3.5 Mirrors.** Where mirrors are provided, at least one shall comply with *Section 11B*-603.3.

***11B*-213.3.6 Bathing facilities.** Where bathtubs or showers are provided, at least one bathtub complying with *Section 11B*-607 or at least one shower complying with *Section 11B*-608 shall be provided. *Where two or more accessible showers are provided within the same functional area, at least one shower shall be opposite hand from the other or others (that is, one left-hand controls versus right-hand controls).*

***11B*-213.3.7 Coat hooks and shelves.** Where coat hooks or shelves are provided in toilet rooms without toilet compartments, at least one of each type shall comply with *Section 11B*-603.4. Where coat hooks or shelves are provided in toilet compartments, at least one of each type complying with *Section 11B*-604.8.3 shall be provided in toilet compartments required to comply with *Section 11B*-213.3.1. Where coat hooks or shelves are provided in bathing facilities, at least one of each type complying with *Section 11B*-603.4 shall serve fixtures required to comply with *Section 11B*-213.3.6.

***11B*-214 Washing machines and clothes dryers**

***11B*-214.1 General.** Where provided, washing machines and clothes dryers shall comply with *Section 11B*-214.

***11B*-214.2 Washing machines.** Where three or fewer washing machines are provided, at least one shall comply with *Section 11B*-611. Where more than three washing machines are provided, at least two shall comply with *Section 11B*-611.

***11B*-214.3 Clothes dryers.** Where three or fewer clothes dryers are provided, at least one shall comply with *Section 11B*-611. Where more than three clothes dryers are provided, at least two shall comply with *Section 11B*-611.

11B*-215 Fire alarm systems *and carbon monoxide alarm systems

***11B*-215.1 General.** Where fire alarm systems *and carbon monoxide alarm systems* provide audible alarm coverage, alarms shall comply with *Section 11B*-215.

Exception: In existing facilities, visible alarms *for fire alarm systems* shall not be required except where an existing fire alarm system is upgraded or replaced, or a new fire alarm system is installed.

***11B*-215.2 Public and common use areas.** Alarms in public use areas and common use areas shall comply with *Chapter 9, Section 907.5.2.3.1.*

***11B*-215.3 Employee work areas.** Where employee work areas have audible alarm coverage, the wiring system shall be designed so that visible alarms complying with *Chapter 9, Section 907.5.2.3.1 Exception* can be integrated into the alarm system.

***11B*-215.4 Transient lodging.** Guest rooms required to comply with *Section 11B*-224.4 shall provide fire alarms complying with *Chapter 9, Section 907.5.2.3.2, and carbon monoxide alarms, where provided, complying with Chapter 4.*

***11B*-215.5 Residential facilities.** Where provided in residential dwelling units required to comply with *Section 11B*-809.5, *fire* alarms shall comply with *Chapter 9, Section 907.5.2.3.3 and carbon monoxide alarms shall comply with Chapter 4.*

***11B*-216 Signs**

***11B*-216.1 General.** *New or altered signs* shall be provided in accordance with *Section 11B*-216 and shall comply with *Section 11B*-703. *The addition of or replacement of signs shall not trigger any additional path of travel requirements.*

Exceptions:

1. Building directories, menus, seat and row designations in assembly areas, occupant names, building addresses, and company names and logos shall not be required to comply with *Section 11B*-216.
2. ***Reserved.***
3. Temporary, 7 days or less, signs shall not be required to comply with *Section 11B*-216.
4. In detention and correctional facilities, signs not located in public use areas shall not be required to comply with *Section 11B*-216.

***11B*-216.2 Designations.** Interior and exterior signs identifying permanent rooms and spaces shall comply with *Sections 11B*-703.1, *11B*-703.2, *11B-703.3* and *11B*-703.5. Where pictograms are provided as designations of permanent rooms and spaces, the pictograms shall comply with *Section 11B*-703.6 and shall have text descriptors complying with *Sections 11B*-703.2 and *11B*-703.5.

Exception: Exterior signs that are not located at the door to the space they serve shall not be required to comply with *Section 11B*-703.2.

***11B*-216.3 Directional and informational signs.** Signs that provide direction to or information about interior *and exterior* spaces and facilities of the site shall comply with *Section 11B*-703.5.

***11B*-216.4 Means of egress.** Signs for means of egress shall comply with *Section 11B*-216.4.

***11B*-216.4.1 Exit doors.** *Signs required by Chapter 10, Section 1013.4 at doors to* exit passageways, exit discharge, and exit stairways shall *comply with Sections 11B*-703.1, *11B-703.2, 11B-703.3* and *11B*-703.5.

11B*-216.4.2 Areas of refuge *and exterior areas for assisted rescue. Signs required by *Chapter 10, Section 1009.11* to provide instructions in areas of refuge shall comply with *Section 11B*-703.5. *Signs required by Chapter 10, Section 1009.9 at doors to areas of refuge and exterior areas for assisted rescue shall comply with Sections 11B-703.1, 11B-703.2, 11B-703.3 and 11B-703.5 and include an International Symbol of Accessibility complying with Section 11B-703.7.2.1.*

***11B*-216.4.3 Directional signs.** Signs required by *Chapter 10, Section 1009.10* to provide directions to accessible means of egress shall comply with *Section 11B*-703.5.

***11B*-216.4.4 Delayed egress locks.** *Signs required by Chapter 10, Section 1010.1.9.7, Item 6.4 at doors with delayed egress locks shall comply with Sections 11B-703.1, 11B-703.2, 11B-703.3 and 11B-703.5.*

***11B*-216.5 Parking.** *Signs identifying parking spaces and signs within parking facilities shall comply with Section 11B-216.5.*

11B*-216.5.1 *Parking spaces. Parking spaces complying with *Section 11B*-502 shall be identified by signs complying with *Sections 11B*-502.6 *and 11B-502.8.*

Exceptions:

1. ***Reserved.***
2. In residential facilities, where parking spaces are assigned to specific residential dwelling units, identification of accessible parking spaces shall not be required.

11B*-216.5.2 *Parking facilities. *Signs within parking facilities shall comply with Section 11B-216.5.2.*

11B*-216.5.2.1 *Signs intended for use by pedestrians. *Signs intended for use by pedestrians within parking facilities, including directional or informational signs indicating parking sections or levels, shall comply with the requirements of Section 11B-216.*

11B*-216.5.2.2 *Additional signs. *Signs within parking facilities containing parking spaces complying with Section 11B-502 shall comply with Section 11B-502.8.*

***11B*-216.6 Entrances.** *In existing buildings and facilities where* not all entrances comply with *Section 11B*-404, entrances complying with *Section 11B*-404 shall be identified by the International Symbol of Accessibility complying with *Section 11B*-703.7.2.1. *Directional signs complying with Section 11B-703.5 that indicate the location of the nearest entrance complying with Section 11B-404 shall be provided at entrances that do not comply with Section 11B-404. Directional signs complying with Section 11B-703.5, including the International Symbol of Accessibility complying with Section 11B-703.7.2.1, indicating the accessible route to the nearest accessible entrance shall be provided at junctions when the accessible route diverges from the regular circulation path.*

***11B*-216.7 Elevators.** Where existing elevators do not comply with *Section 11B*-407, elevators complying with *Section 11B*-407 shall be clearly identified with the International Symbol of Accessibility complying with *Section 11B*-703.7.2.1. *Existing buildings that have been remodeled to provide specific elevators for public use that comply with these building standards shall

patient sleeping rooms, transient lodging guest rooms, and residential dwelling units.

2. *Geometric symbols shall not be required at entrances to inmate toilet rooms and bathing rooms in detention and correctional facilities where only one gender is housed.*

11B-216.9 TTYs. Identification and directional signs for public TTYs shall be provided in accordance with *Section 11B*-216.9.

11B-216.9.1 Identification signs. Public TTYs shall be identified by the International Symbol of TTY complying with *Section 11B*-703.7.2.2.

11B-216.9.2 Directional signs. Directional signs indicating the location of the nearest public TTY shall be provided at all banks of public pay telephones not containing a public TTY. In addition, where signs provide direction to public pay telephones, they shall also provide direction to public TTYs. *If a facility has no banks of telephones, the directional signs shall be provided at the entrance or in a building directory.* Directional signs shall comply with *Section 11B*-703.5 and shall include the International Symbol of TTY complying with *Section 11B*-703.7.2.2.

11B-216.10 Assistive listening systems. Each assembly area required by *Section 11B*-219 to provide assistive listening systems shall provide signs informing patrons of the availability of the assistive listening system. *The sign shall include wording that states "Assistive-Listening System Available" and shall be posted in a prominent place at or near the assembly area entrance.* Assistive listening signs shall comply with *Section 11B*-703.5 and shall include the International Symbol of Access for Hearing Loss complying with *Section 11B*-703.7.2.4.

Exception: Where ticket offices or windows are provided, signs shall not be required at each assembly area provided that signs are displayed at each ticket office or window informing patrons of the availability of assistive listening systems.

11B-216.11 Check-out aisles. Where more than one check-out aisle is provided, check-out aisles complying with *Section 11B*-904.3 shall be identified by *a sign complying with Section 11B-904.3.4*. Where check-out aisles are identified by numbers, letters, or functions, signs identifying check-out aisles complying with *Section 11B*-904.3 shall be located in the same location as the check-out aisle identification.

Exception: Where all check-out aisles comply with *Section 11B*-904.3, signs complying with *Section 11B*-703.7.2.1 shall not be required.

11B-216.12 Amusement rides. Signs identifying the type of access provided on amusement rides shall be provided at entries to queues and waiting lines. In addition, where accessible unload areas also serve as accessible load areas, signs indicating the location of the accessible load and unload areas shall be provided at entries to queues and waiting lines. *Signs shall comply with Section 11B-703.5 and shall include the International Symbol of Accessibility complying with Section 11B-703.7.2.1.*

11B-216.13 Variable message signs. *Where provided in transportation facilities, variable message signs conveying transportation-related information shall comply with Section 11B-703.8. Where provided in buildings that are designed as emergency shelters, variable message signs conveying emergency-related information shall comply with Section 11B-703.8.*

11B-217 Telephones

11B-217.1 General. Where coin-operated public pay telephones, coinless public pay telephones, public closed-circuit telephones, public courtesy phones, or other types of public telephones are provided, public telephones shall be provided in accordance with *Section 11B*-217 for each type of public telephone provided. For purposes of this section, a bank of telephones shall be considered to be two or more adjacent telephones.

11B-217.2 Wheelchair accessible telephones. Where public telephones are provided, wheelchair accessible telephones complying with *Section 11B*-704.2 shall be provided in accordance with Table *11B*-217.2.

Exception: Drive-up only public telephones shall not be required to comply with *Section 11B*-217.2.

11B-217.3 Volume controls. All public telephones shall have volume controls complying with *Section 11B*-704.3.

11B-217.4 TTYs. TTYs complying with *Section 11B*-704.4 shall be provided in accordance with *Section 11B*-217.4.

11B-217.4.1 Bank requirement. Where four or more public pay telephones are provided at a bank of telephones, at least one public TTY complying with *Section 11B*-704.4 shall be provided at that bank.

Exception: ***Reserved.***

11B-217.4.2 Floor requirement. TTYs in public buildings shall be provided in accordance with *Section 11B*-217.4.2.1. TTYs in private buildings shall be provided in accordance with *Section 11B*-217.4.2.2.

11B-217.4.2.1 Public buildings. Where at least one public pay telephone is provided on a floor of a public building, at least one public TTY shall be provided on that floor.

11B-217.4.2.2 Private buildings. Where four or more public pay telephones are provided on a floor of a private building, at least one public TTY shall be provided on that floor.

11B-217.4.3 Building requirement. TTYs in public buildings shall be provided in accordance with *Section 11B*-217.4.3.1. TTYs in private buildings shall be provided in accordance with *Section 11B*-217.4.3.2.

11B-217.4.3.1 Public buildings. Where at least one public pay telephone is provided in a public building, at least one public TTY shall be provided in the building. Where at least one public pay telephone is provided in a public use area of a public building, at least one public TTY shall be provided in the public building in a public use area.

11B-217.4.3.2 Private buildings. Where four or more public pay telephones are provided in a private building, at least one public TTY shall be provided in the building.

Exception: *In a stadium or arena, in a convention center, in a hotel with a convention center or in a covered mall, if an interior public pay telephone is provided at least one interior public TTY shall be provided in the facility.*

11B-217.4.4 Exterior site requirement. Where four or more public pay telephones are provided on an exterior site, at least one public TTY shall be provided on the site.

11B-217.4.5 Rest stops, emergency roadside stops, and service plazas. Where at least one public pay telephone is provided at a public rest stop, emergency roadside stop, or service plaza, at least one public TTY shall be provided.

11B-217.4.6 Hospitals. Where at least one public pay telephone is provided serving a hospital emergency room, hospital recovery room, or hospital waiting room, at least one public TTY shall be provided at each location.

11B-217.4.7 Transportation facilities. In transportation facilities, in addition to the requirements of *Sections 11B*-217.4.1 through *11B*-217.4.4, where at least one public pay telephone serves a particular entrance to a bus or rail facility, at least one public TTY shall be provided to serve that entrance. In airports, in addition to the requirements of *Sections 11B*-217.4.1 through *11B*-217.4.4, where four or more public pay telephones are located in a terminal outside the security areas, a concourse within the security areas, or a baggage claim area in a terminal, at least one public TTY shall be provided in each location.

11B-217.4.8 Detention and correctional facilities. In detention and correctional facilities, where at least one pay telephone is provided in a secured area used only by detainees or inmates and security personnel, at least one TTY shall be provided in at least one secured area.

11B-217.5 Shelves for portable TTYs. Where a bank of telephones in the interior of a building consists of three or more public pay telephones, at least one public pay telephone at the bank shall be provided with a shelf and an electrical outlet in accordance with *Section 11B*-704.5.

Exceptions:

1. Secured areas of detention and correctional facilities where shelves and outlets are prohibited for purposes of security or safety shall not be required to comply with *Section 11B*-217.5.
2. The shelf and electrical outlet shall not be required at a bank of telephones with a TTY.

11B-218 Transportation facilities.

11B-218.1 General. Transportation facilities shall comply with *Section 11B*-218.

11B-218.2 New and altered fixed guideway stations. New and altered stations in rapid rail, light rail, commuter rail, intercity rail, high speed rail, and other fixed guideway systems shall comply with *Sections 11B*-810.5 through *11B*-810.10.

11B-218.3 Key stations and existing intercity rail stations. Key stations and existing intercity rail stations shall comply with *Sections 11B*-810.5 through *11B*-810.10.

11B-218.4 Bus shelters. Where provided, bus shelters shall comply with *Section 11B*-810.3.

11B-218.5 Other transportation facilities. In other transportation facilities, public address systems shall comply with *Section 11B*-810.7 and clocks shall comply with *Section 11B*-810.8.

11B-219 Assistive listening systems

11B-219.1 General. Assistive listening systems shall be provided in accordance with *Section 11B*-219 and shall comply with *Section 11B*-706.

11B-219.2 Required systems. *An assistive listening system shall be provided in assembly areas, including conference and meeting rooms.*

Exception: *This section does not apply to systems used exclusively for paging, background music, or a combination of these two uses.*

11B-219.3 Receivers. *The minimum number of receivers to be provided shall be equal to 4 percent of the total number of seats, but in no case less than two.* Twenty-five percent minimum of receivers provided, but no fewer than two, shall be hearing-aid compatible in accordance with *Section 11B*-706.3.

Exceptions:

1. Where a building contains more than one assembly area and the assembly areas required to provide assistive listening systems are under one management, the total number of required receivers shall be permitted to be calculated according to the total number of seats in the assembly areas in the building provided that all receivers are usable with all systems.
2. Where all seats in an assembly area are served by an induction loop assistive listening system, the minimum number of receivers required by *Section 11B*-219.3 to be hearing-aid compatible shall not be required to be provided.

11B-219.4 Location. *If the assistive-listening system provided is limited to specific areas or seats, then such areas or seats shall be within a 50-foot (15240 mm) viewing distance of the stage or playing area and shall have a complete view of the stage or playing area.*

11B-219.5 Permanent and portable systems. *Permanently installed assistive-listening systems are required in areas if (1) they accommodate at least 50 persons or if they have audio-amplification systems, and (2) they have fixed seating. If portable assistive-listening systems are used for conference or meeting rooms, the system may serve more than one room. An adequate number of electrical outlets or other supplementary wiring necessary to support a portable assistive-listening system shall be provided.*

11B-220 Automatic teller machines, fare machines and point-of-sale devices.

11B-220.1 Automatic teller machines and fare machines. Where automatic teller machines or self-service fare vending, collection, or adjustment machines are provided *they shall comply with Section 11B-220.1.* Where bins are provided for envelopes, waste paper, or other purposes, at least one of each type shall comply with *Section 11B*-811.

11B-220.1.1 One automatic teller machine or fare machine. *Where one automatic teller machine or fare machine is provided at a location, it shall comply with Sections 11B-707.2 through 11B-707.8.*

11B-220.1.2 Two automatic teller machines or fare machines. *Where two automatic teller machines or fare machines are provided at a location, one shall comply with Sections 11B-707.2 through 11B-707.8 and one shall comply with Sections 11B-707.3, 11B-707.4, 11B-707.5, 11B-707.6, 11B-707.7.2 and 11B-707.8.*

11B-220.1.3 Three or more automatic teller machines or fare machines. *Where three or more automatic teller machines or fare machines are provided at a location, at least 50 percent shall comply with Sections 11B-707.2 through 11B-707.8 and the rest shall comply with Sections 11B-707.3, 11B-707.4, 11B-707.5, 11B-707.6, 11B-707.7.2 and 11B-707.8.*

11B-220.2 Point-of-sale devices. *Where point-of-sale devices are provided, all devices at each location shall comply with Sections 11B-707.3, 11B-707.7.2, , and 11B-707.9. Where point-of-sale devices are provided at check stands and sales and service counters required to comply with Sections 11B-227.2 and 11B-227.3, they shall comply with Sections 11B-707.2, 11B-707.3, 11B-707.7.2, and 11B-707.9.*

Exceptions:

1. *Where a single point-of-sale device is installed for use with any type of motor fuel, it shall comply with Sections 11B-707.2, 11B-707.3, 11B-707.7.2, and 11B-707.9. Where more than one point-of-sale device is installed for use with a specific type of motor fuel, a minimum of two for that type shall comply with Sections 11B-707.2, 11B-707.3, 11B-707.7.2, and 11B-707.9. Types of motor fuel include, but are not limited to, gasoline, diesel, compressed natural gas, methanol, or ethanol.*
2. *Point-of-sale devices at electric vehicle charging stations required to comply with Section 11B-812 shall comply with Section 11B-812.10.3.*

11B-221 Assembly areas.

11B-221.1 General. Assembly areas shall provide wheelchair spaces, companion seats, designated aisle seats *and semi-ambulant seats* complying with *Sections 11B*-221 and *11B*-802. In addition, lawn seating shall comply with *Section 11B*-221.5.

11B-221.2 Wheelchair spaces. Wheelchair spaces complying with *Section 11B*-221.2 shall be provided in assembly areas with fixed seating.

Note: *When required wheelchair spaces are not occupied by persons eligible for those spaces, individual, removable seats may be placed in those spaces.*

11B-221.2.1 Number and location. Wheelchair spaces shall be provided complying with *Section 11B*-221.2.1.

11B-221.2.1.1 General seating. Wheelchair spaces complying with *Section 11B*-802.1 shall be provided in accordance with Table *11B*-221.2.1.1.

11B-221.2.1.2 Luxury boxes, club boxes, and suites in arenas, stadiums, and grandstands. In each luxury box, club box, and suite within arenas, stadiums, and grandstands, wheelchair spaces complying with *Section 11B*-802.1 shall be provided in accordance with Table *11B*-221.2.1.1.

11B-221.2.1.3 Other boxes. In boxes other than those required to comply with *Section 11B*-221.2.1.2, the total number of wheelchair spaces required shall be determined in accordance with Table *11B*-221.2.1.1. Wheelchair spaces shall be located in not less than 20 percent of all boxes provided. Wheelchair spaces shall comply with *Section 11B*-802.1.

11B-221.2.1.4 Team or player seating. At least one wheelchair space complying with *Section 11B*-802.1 shall be provided in team or player seating areas serving areas of sport activity.

Exception: Wheelchair spaces shall not be required in team or player seating areas serving bowling lanes not required to comply with *Section 11B*-206.2.11.

11B-221.2.1.5 Stadium-style movie theaters. *In stadium-style movie theaters, the total number of wheelchair spaces required shall be determined in accordance with Table 11B-221.2.1.1. The required wheelchair spaces shall be located on aisles or cross-aisles in the stadium section that satisfy at least one of the following criteria:*

1. *Located within the rear 60 percent of the seats provided in the theater; or*
2. *Located within the area of the theater in which the vertical viewing angles (as measured to the top of the screen) are from the 40th to the 100th percentile of vertical viewing angles for all seats as ranked from the seats in the first row (1st percentile) to seats in the back row (100th percentile).*

11B-221.2.1.6 Specialty seating areas. *In assembly areas, wheelchair spaces shall be provided in each specialty seating area that provides spectators with distinct services or amenities that generally are not available to other spectators. The number of wheelchair spaces provided in specialty seating areas shall be included in, rather than be in addition to, the total number of wheelchair spaces required by Table 11B-221.2.1.1.*

Exception: *In existing buildings and facilities, if it is not readily achievable for wheelchair spaces to be placed in each specialty seating area, those services or amenities shall be provided to individuals with disabilities, and their companions, at other designated accessible locations at no additional cost.*

11B-221.2.2 Integration. Wheelchair spaces shall be an integral part of the seating plan.

11B-221.2.3 Lines of sight and dispersion. Wheelchair spaces shall provide lines of sight complying with *Section 11B*-802.2 and shall comply with *Section 11B*-221.2.3. In providing lines of sight, wheelchair spaces shall be dispersed. Wheelchair spaces shall provide spectators with choices of seating locations and viewing angles that are substantially equivalent to, or better than, the choices of seating locations and viewing angles available to all other spectators. When the number of wheelchair spaces required by *Section 11B*-221.2.1 has been met, further dispersion shall not be required. *In stadiums, arenas and grandstands, wheelchair spaces shall be dispersed to all levels that include seating served by an accessible route.*

Exception: Wheelchair spaces in team or player seating areas serving areas of sport activity shall not be required to comply with *Section 11B*-221.2.3.

11B-221.2.3.1 Horizontal dispersion. Wheelchair spaces shall be dispersed horizontally. *In assembly areas that have seating encircling, in whole or in part, a field of play or performance, wheelchair spaces shall be dispersed horizontally around the field of play or performance area.*

Exceptions:

1. Horizontal dispersion shall not be required in assembly areas with 300 or fewer seats if the companion seats required by *Section 11B*-221.3 and wheelchair spaces are located within the 2nd or 3rd quartile of the total row length. Intermediate aisles shall be included in determining the total row length. If the row length in the 2nd and 3rd quartile of a row is insufficient to accommodate the required number of companion seats and wheelchair spaces, the additional companion seats and wheelchair spaces shall be permitted to be located in the 1st and 4th quartile of the row.
2. In row seating, two wheelchair spaces shall be permitted to be located side-by-side.

11B-221.2.3.2 Vertical dispersion. Wheelchair spaces shall be dispersed vertically at varying distances from the screen, performance area, or playing field. In addition, wheelchair spaces shall be located in each balcony or mezzanine that is located on an accessible route.

Exceptions:

1. Vertical dispersion shall not be required in assembly areas with 300 or fewer seats if the wheelchair spaces provide viewing angles that are equivalent to, or better than, the average viewing angle provided in the facility.
2. In bleachers, wheelchair spaces shall not be required to be provided in rows other than rows at points of entry to bleacher seating.

11B-221.2.4 Temporary structures. *Wheelchair spaces shall not be located on, or be obstructed by, temporary platforms or other movable structures.*

Exception: *When an entire seating section is placed on temporary platforms or other movable structures in an area where fixed seating is not provided, in order to increase seating for an event, wheelchair spaces may be placed in that section.*

11B-221.3 Companion seats. At least one companion seat complying with *Section 11B*-802.3 shall be provided *immediately adjacent* to each wheelchair space required by *Section 11B*-221.2.1.

11B-221.4 Designated aisle seats. At least 5 percent of the total number of aisle seats provided shall comply with *Section 11B*-802.4 and shall be the aisle seats located closest to accessible routes.

Exception: Team or player seating areas serving areas of sport activity shall not be required to comply with *Section 11B*-221.4.

11B-221.5 Lawn seating. Lawn seating areas and exterior overflow seating areas, where fixed seats are not provided, shall connect to an accessible route.

11B-221.6 Semi-ambulant seats. *At least 1 percent of the total number of seats, and no fewer than two, shall be semi-ambulant seats complying with Section 11B-802.5.*

11B-222 Dressing, fitting, and locker rooms

11B-222.1 General. Where dressing rooms, fitting rooms, or locker rooms are provided, at least 5 percent, but no fewer than one, of each type of use in each cluster provided shall comply with *Section 11B*-803.

Exception: In alterations, where it is technically infeasible to provide rooms in accordance with *Section 11B*-222.1, one room for each sex on each level shall comply with *Section 11B*-803. Where only unisex rooms are provided, unisex rooms shall be permitted.

11B-222.2 Coat hooks and shelves. Where coat hooks or shelves are provided in dressing, fitting or locker rooms without individual compartments, at least one of each type shall comply with *Section 11B*-803.5. Where coat hooks or shelves are provided in individual compartments at least one of each type complying with *Section 11B*-803.5 shall be provided in individual compartments in dressing, fitting, or locker rooms required to comply with *Section 11B*-222.1.

11B-222.3 Mirrors. *Where mirrors are provided in dressing, fitting or locker rooms without individual compartments, at least one of each type shall comply with Section 11B-803.6. Where mirrors are provided in individual compartments at least one of each type complying with Section 11B-803.6 shall be provided in individual compartments in dressing, fitting or locker rooms required to comply with Section 11B-222.1.*

11B-223 Medical care and long-term care facilities

11B-223.1 General. In licensed medical care facilities and licensed long-term care facilities where the period of stay exceeds twenty-four hours, patient *bedrooms* or resident sleeping rooms shall be provided in accordance with *Sections 11B-223* and *11B-805*.

Exception: Toilet rooms that are part of critical or intensive care patient sleeping rooms shall not be required to comply with *Section 11B*-603.

11B-223.1.1 Alterations. Where *patient bedrooms or resident* sleeping rooms are altered or added, the requirements of *Section 11B*-223 shall apply only to the *patient bedrooms or resident* sleeping rooms being altered or added until the number of *patient bedrooms or resident* sleeping rooms complies with the minimum number required for new construction.

11B-223.1.1.1 Area alterations. *Patient bedrooms or resident sleeping rooms added or altered as part of a planned renovation of an entire wing, a department, or other discrete area of an existing medical facility shall comply with Section 11B-805.2 until the number of patient bedrooms or resident sleeping rooms provided within the area of renovation complies with the minimum number required for new construction by Section 11B-223.2 or 11B-223.3.*

11B-223.1.1.2 Individual alterations. *Patient bedrooms or resident sleeping rooms added or altered individually, and not as part of an alteration of an entire area, shall comply with Section 11B-805.2, until either: a) the number of patient bedrooms or resident sleeping rooms provided in the department or area containing the individually altered or added patient bedrooms or resident sleeping rooms complies with the minimum number required if the percentage requirements of Section 11B-223.2 or 11B-223.3 were applied to that department or area; or b) the overall number of patient bedrooms or resident sleeping rooms in the facility complies with the minimum number required for new construction by Section 11B-223.2 or 11B-223.3.*

11B-223.1.1.3 Toilet and bathing facilities. *Toilet/bathing rooms which are part of patient bedrooms added or altered and required to be accessible shall comply with Section 11B-805.2.4.*

11B-223.2 Hospitals, rehabilitation facilities, psychiatric facilities and detoxification facilities. Hospitals, rehabilitation facilities, psychiatric facilities and detoxification facilities shall comply with *Section 11B*-223.2. *All public use and common use areas shall be accessible in compliance with this chapter.*

11B-223.2.1 Facilities not specializing in treating conditions that affect mobility. In facilities not specializing in treating conditions that affect mobility, *including hospitals, psychiatric and detoxification facilities,* at least 10 percent, but no fewer than one, of the patient *bedrooms or resident* sleeping rooms shall provide mobility features complying with *Section 11B*-805. *Accessible patient bedrooms or resident sleeping rooms shall be dispersed in a manner that is proportionate by type of medical specialty.*

11B-223.2.2 Facilities specializing in treating conditions that affect mobility. In facilities specializing in treating conditions that affect mobility, 100 percent of the patient *bedrooms* shall provide mobility features complying with *Section 11B*-805.

11B-223.2.3 On-call rooms. *Where physician or staff on-call sleeping rooms are provided, at least 10 percent, but no fewer than one, of the on-call rooms shall provide mobility features complying with Sections 11B-806.2.3, 11B-806.2.4 and 11B-806.2.6.*

11B-223.3 Long-term care facilities. In licensed long-term care facilities, *including skilled nursing facilities, intermediate care facilities and nursing homes,* at least 50 percent, but no fewer than one, of each type of *patient bedroom or* resident sleeping room shall provide mobility features complying with *Section 11B*-805.

11B-223.4 Professional offices of health care providers. *Professional offices of health care providers shall comply with Section 11B-805.*

11B-224 Transient lodging guest rooms, housing at a place of education and social service center establishments

11B-224.1 General. *Hotels, motels, inns, dormitories, resorts and similar transient* lodging facilities shall provide guest rooms in accordance with *Sections 11B-224.1 through 11B-224.6.*

11B-224.1.1 Alterations. Where guest rooms are altered or added, the requirements of *Section 11B*-224 shall apply only to the guest rooms being altered or added until the number of guest rooms complies with the minimum number required for new construction.

11B-224.1.2 Guest room doors and doorways. Entrances, doors, and doorways providing user passage into and within guest rooms that are not required to provide mobility features complying with *Section 11B*-806.2 shall comply with *Section 11B*-404.2.3. *Bathrooms doors shall be either sliding or hung to swing in the direction of egress from the bathroom.*

Exception: Shower and sauna doors in guest rooms that are not required to provide mobility features complying with *Section 11B*-806.2 shall not be required to comply with *Section 11B*-404.2.3.

11B-224.1.3 Range of accommodations. *Accessible guest rooms or suites shall be dispersed among the various classes of sleeping accommodations to provide a range of options applicable to room sizes, costs, and amenities provided.*

11B-224.1.4 Guest room toilet and bathing rooms. *Where toilet and bathing rooms are provided in guest rooms that are not required to provide mobility features complying with Section 11B-806.2, toilet and bathing fixtures shall only be required to comply with Section 11B-603.6.*

11B-224.2 Guest rooms with mobility features. In transient lodging facilities, guest rooms with mobility features complying with *Section 11B*-806.2 shall be provided in accordance with Table *11B*-224.2, as *follows*.

11B-224.2.1 Fifty or less guest room facilities. *Facilities that are subject to the same permit application on a common site that each have fifty or fewer guest rooms may be combined for the purposes of determining the required number of accessible rooms and type of accessible bathing facility.*

11B-224.2.2 More than fifty guest room facilities. *Facilities with more than fifty guest rooms shall be treated separately for the purposes of determining the required number of accessible rooms and type of accessible bathing facility.*

11B-224.3 Beds. In guest rooms having more than 25 beds, 5 percent minimum of the beds shall have clear floor space complying with *Section 11B*-806.2.3.

11B-224.4 Guest rooms with communication features. In transient lodging facilities, guest rooms with communication features complying with *Section 11B*-806.3 shall be provided in accordance with Table *11B*-224.4.

11B-224.5 Dispersion. Guest rooms required to provide mobility features complying with *Section 11B*-806.2 and guest rooms required to provide communication features complying with *Section 11B*-806.3 shall be dispersed among the various classes of guest rooms, and shall provide choices of types of guest rooms, number of beds, and other amenities comparable to the choices provided to other guests. Where the minimum number of guest rooms required to comply with *Section 11B*-806 is not sufficient to allow for complete dispersion, guest rooms shall be dispersed in the following priority: guest room type, number of beds, and amenities. At least one guest room required to provide mobility features complying with *Section 11B*-806.2 shall also provide communication features complying with *Section 11B*-806.3. Not more than 10 percent of guest rooms required to provide mobility features complying with *Section 11B*-806.2 shall be used to satisfy the minimum number of guest rooms required to provide communication features complying with *Section 11B*-806.3.

TABLE 11B-223.2.1
NUMBER OF WHEELCHAIR SPACES IN ASSEMBLY AREAS

NUMBER OF SEATS	MINIMUM NUMBER OF REQUIRED WHEELCHAIR SPACES
4 to 25	1
26 to 50	2
51 to 150	4
151 to 300	5
301 to 500	6
501 to 5000	6, plus 1 for each *100*, or fraction thereof, between 501 through 5000
5001 and over	*46*, plus 1 for each 200, or fraction thereof, over 5000

TABLE 11B-224.2
GUEST ROOMS WITH MOBILITY FEATURES

TOTAL NUMBER OF GUEST ROOMS PROVIDED	MINIMUM NUMBER OF REQUIRED ROOMS WITHOUT ROLL-IN SHOWERS	MINIMUM NUMBER OF REQUIRED ROOMS WITH ROLL-IN SHOWERS	TOTAL NUMBER OF REQUIRED ROOMS
1 to 25	*0*	*1*	1
26 to 50	*1*	*1*	2
51 to 75	3	1	4
76 to 100	4	1	5
101 to 150	5	2	7
151 to 200	6	2	8
201 to 300	7	3	10
301 to 400	8	4	12
401 to 500	9	4	13
501 to 1000	2 percent of total	1 percent of total	3 percent of total
1001 and over	20, plus 1 for each 100, or fraction thereof, over 1000	10, plus 1 for each 100, or fraction thereof, over 1000	30, plus 2 for each 100, or fraction thereof, over 1000

TABLE 11B-224.4
GUEST ROOMS WITH COMMUNICATION FEATURES

TOTAL NUMBER OF GUEST ROOMS PROVIDED	MINIMUM NUMBER OF REQUIRED GUEST ROOMS WITH COMMUNICATION FEATURES
1	1
2 to 25	2
26 to 50	4
51 to 75	7
76 to 100	9
101 to 150	12
151 to 200	14
201 to 300	17
301 to 400	20
401 to 500	22
501 to 1000	5 percent of total
1001 and over	50, plus 3 for each 100 over 1000

11B-224.6 Storage. *Fixed or built-in storage facilities within guest rooms required to provide mobility features shall comply with Section 11B-225.*

11B-224.7 Housing at a place of education. *Housing at a place of education subject to this section shall comply with Sections 11B-224.1 through 11B-224.6 and 11B-806 for transient lodging guest rooms. For the purposes of the application of this section, the term "sleeping room" is interchangeable with "guest room" as used in the transient lodging standards.*

Exception: *Housing facilities that are provided by or on behalf of a place of education, with residential dwelling units leased on a year-round basis exclusively to graduate students or faculty, and that do not contain any public use or common use areas available for educational programming, are not subject to Section 11B-224 and shall comply with Section 11B-233.*

11B-224.7.1 Multi-bedroom housing units with mobility features. *Multi-bedroom housing units containing accessible sleeping rooms with mobility features shall have an accessible route throughout the unit in compliance with Section 11B-809.2. Kitchens, when provided, within housing units containing accessible sleeping rooms with mobility features shall comply with Section 11B-804.*

11B-224.7.2 Multi-bedroom housing units with adaptable features. *Multi-bedroom housing units with adaptable features shall be provided as required by Section 11B-233.3.1.2. The number of required multi-bedroom housing units with adaptable features shall be reduced by the number of multi-bedroom housing units with mobility features required by Section 11B-224.2.*

11B-224.8 Social service center establishments. *Group homes, halfway houses, shelters, or similar social service center establishments that provide either temporary sleeping accommodations or residential dwelling units subject to this section shall comply with Sections 11B-224.1 through 11B-224.6 and Section 11B-233.3.*

11B-224.8.1 More than 25-bed sleeping rooms. *In sleeping rooms with more than 25 beds, a minimum of 5 percent of the beds shall have clear floor space complying with Section 11B-806.2.3.*

11B-224.8.2 More than 50-bed facilities. *Facilities with more than 50 beds that provide common use bathing facilities shall provide at least one roll-in shower with a seat that complies with Section 11B-608. When separate shower facilities are provided for men and women, at least one roll-in shower shall be provided for each group.*

11B-225 Storage

11B-225.1 General. Storage facilities shall comply with *Section 11B*-225.

11B-225.2 Storage. Where storage is provided in accessible spaces, at least one of each type shall comply with *Section 11B*-811.

11B-225.2.1 Lockers. Where lockers are provided, at least 5 percent, but no fewer than one of each type, shall comply with *Section 11B*-811.

11B-225.2.2 Self-service shelving. Self-service shelves shall be located on an accessible route complying with *Section 11B*-402. Self-service shelving shall not be required to comply with *Section 11B*-308.

11B-225.2.3 Library book stacks. *Book stacks available for public use shall be 54 inches (1372 mm) maximum above the finish floor.*

Exceptions:

1. *Book stacks available for public use may be higher than 54 inches (1372 mm) maximum above the finish floor when an attendant is available to assist persons with disabilities.*
2. *Book stacks restricted to employee use are not required to comply with these requirements.*

11B-225.3 Self-service storage facilities. Self-service storage facilities shall provide individual self-service storage spaces complying with these requirements in accordance with Table *11B*-225.3.

TABLE 11B-225.3
SELF-SERVICE STORAGE FACILITIES

TOTAL SPACES IN FACILITY	MINIMUM NUMBER OF SPACES REQUIRED TO BE ACCESSIBLE
1 to 200	5 percent, but no fewer than 1
201 and over	10, plus 2 percent of total number of units over 200

11B-225.3.1 Dispersion. Individual self-service storage spaces shall be dispersed throughout the various classes of spaces provided. Where more classes of spaces are provided than the number required to be accessible, the number of spaces shall not be required to exceed that required by Table *11B*-225.3. Self-service storage spaces complying with Table *11B*-225.3 shall not be required to be dispersed among buildings in a multi-building facility.

11B-226 Dining surfaces and work surfaces

11B-226.1 General. Where dining surfaces are provided for the consumption of food or drink, at least 5 percent of the seating spaces and standing spaces at the dining surfaces shall comply with *Section 11B*-902. In addition, where work surfaces are provided for use by other than employees, at least 5 percent shall comply with *Section 11B*-902.

Exceptions:

1. Sales counters and service counters shall not be required to comply with *Section 11B*-902. *See Section 11B-227.*
2. Check writing surfaces provided at check-out aisles not required to comply with *Section 11B*-904.3 shall not be required to comply with *Section 11B*-902.

11B-226.2 Dispersion. Dining surfaces required to comply with *Section 11B*-902 shall be dispersed throughout the space or facility containing dining surfaces *for each type of seating in a functional area. Work surfaces required to comply with Section 11B-902 shall be dispersed throughout the space or facility containing work surfaces.*

11B-226.3 Dining surfaces exceeding 34 inches in height. *Where food or drink is served for consumption at a counter exceeding 34 inches (864 mm) in height, a portion of the main counter 60 inches (1525 mm) minimum in length shall be provided in compliance with Section 11B-902.3.*

11B-226.4 Baby changing tables. *Baby changing tables shall comply with Sections 11B-309 and 11B-902. Baby changing tables when deployed shall not obstruct the required width of an accessible route except as allowed by Section 11B-307.2. Baby changing tables shall not be located in toilet compartments complying with Section 11B-604.8 within a multiple accommodation toilet facility.*

11B-227 Sales and service

11B-227.1 General. Where provided, check-out aisles, sales counters, service counters, food service lines, queues, and waiting lines shall comply with *Sections 11B*-227 and *11B*-904.

11B-227.2 Check-out aisles. Where check-out aisles are provided, check-out aisles complying with *Section 11B*-904.3 shall be provided in accordance with Table *11B*-227.2. Where check-out aisles serve different functions, check-out aisles complying with *Section 11B*-904.3 shall be provided in accordance with Table *11B*-227.2 for each function. Where check-out aisles are dispersed throughout the building or facility, check-out aisles complying with *Section 11B*-904.3 shall be dispersed. *When not all check-out aisles are accessible, accessible check-out aisles shall be identified by a sign complying with Section 11B-904.3.4.*

Note: *Operational procedures are often necessary to ensure the Americans with Disabilities Act accessibility requirements are met. When check-out aisles are open for customer use, the business should ensure that a minimum of one accessible check-out aisle is always available for use by persons with disabilities. As check-out aisles are opened and closed based on fluctuating customer levels, the business should ensure that the number of accessible check-out aisles available complies with Table 11B-227.2.*

Exception: *In existing buildings, where* the selling space is under 5000 square feet (465 m^2) no more than one check-out aisle complying with *Section 11B*-904.3 shall be required.

TABLE 11B-227.2
CHECK-OUT AISLES

NUMBER OF CHECK-OUT AISLES OF EACH FUNCTION	MINIMUM NUMBER OF CHECK-OUT AISLES OF EACH FUNCTION REQUIRED TO COMPLY WITH *11B*-904.3
1 to 4	1
5 to 8	2
9 to 15	3
16 and over	3, plus 20 percent of additional aisles

11B-227.2.1 Altered check-out aisles. Where check-out aisles are altered, at least one of each check-out aisle serving each function shall comply with *Section 11B*-904.3 until the number of check-out aisles complies with *Section 11B*-227.2.

11B-227.3 Counters. Where provided, at least one of each type of sales counter and service counter shall comply with *Section 11B*-904.4. Where counters are dispersed throughout the building or facility, counters complying with *Section 11B*-904.4 also shall be dispersed.

11B-227.4 Food service lines. Food service lines shall comply with *Section 11B*-904.5. Where self-service shelves are provided, at least 50 percent, but no fewer than one, of each type provided shall comply with *Section 11B*-308.

11B-227.5 Queues and waiting lines. Queues and waiting lines servicing counters or check-out aisles required to comply with *Sections 11B*-904.3 or *11B*-904.4 shall comply with *Section 11B*-403.

11B-228 Depositories, vending machines, change machines, mail boxes, fuel dispensers, and electric vehicle charging stations.

BUREAU OF ENGINEERING
OFFICIAL RECORD

THE CITY OF LOS ANGELES OR ITS OFFICERS OR AGENTS SHALL NOT BE RESPONSIBLE FOR THE ACCURACY OR COMPLETENESS OF ELECTRONIC COPIES OF THIS PLAN SHEET.
FILE PATH: A360://Studio City Recreation Center/SCRC-Project Model_Central_Final.rvt
SHEET ISSUE DATE:01/01/14
REVISION DATES: (DESIGN STAGE ONLY)

ENGINEERING
CITY OF LOS ANGELES
DEPARTMENT OF PUBLIC WORKS
BUREAU OF ENGINEERING
NO. | REVISION DESCRIPTION | DATE | BY
INDEX NO. RP-300106
BUILDING NO. -
CITY ENGINEER: DATE:
CLIENT: DEPARTMENT OF RECREATION AND PARKS
GENERAL MANAGER: MICHAEL A. SHULL
TED ALLEN, PE 1-24-2019
ARCHITECTURAL DIVISION LIC. NO.: C 23333 1-24-2019
ARCHITECT: ROBERT LOMELIN 1-24-2019
DESIGNED BY: Z. AKHTER, M. CHAVARRIA, A. KIM, M. LAM
DRAWN BY: Z. AKHTER, M. CHAVARRIA, A KIM 1-24-2019
CHECKED BY: ROBERT LOMELIN 1-24-2019
APPROVED BY:MAHMOOD KARIMZADEH,AIA, DEPUTY CIT

***11B*-228.1 General.** Where provided, at least one of each type of depository, vending machine, change machine, and fuel dispenser shall comply with *Section 11B*-309. *Electric vehicle charging stations shall comply with Section 11B-228.3.*

Exception: Drive-up only depositories shall not be required to comply with *Section 11B*-309.

***11B*-228.2 Mail boxes.** Where mail boxes are provided in an interior location, at least 5 percent, but no fewer than one, of each type shall comply with *Section 11B*-309. In residential facilities, where mail boxes are provided for each residential dwelling unit, mail boxes complying with *Section 11B*-309 shall be provided for each residential dwelling unit required to provide mobility features complying with *Sections 11B*-809.2 through *11B*-809.4 *and adaptable features complying with Chapter 11A, Division IV.*

***11B*-228.3 Electric vehicle charging stations**

***11B*-228.3.1 General.** *Where electric vehicle charging stations (EVCS) are provided, EVCS shall be provided in accordance with Section 11B-228.3.*

***11B*-228.3.1.1 Existing facilities.** *Where new EVCS are added to a facility with existing EVCS, the requirements of Section 11B-812 shall apply only to the new EVCS installed. Alterations to existing EVCS shall comply with Section 11B-228.3.*

***11B*-228.3.1.2 Operable parts.** *Where EV chargers are provided, operable parts on all EV chargers shall comply with Section 11B-309.4.*

***11B*-228.3.2 Minimum number.** *EVCS complying with Section 11B-812 shall be provided in accordance with Section 11B-228.3.2. Where EVCS are provided in more than one facility on a site, the number of EVCS complying with Section 11B-228.3.2 provided on the site shall be calculated according to the number required for each facility. Where an EV charger can simultaneously charge more than one vehicle, the number of EV chargers provided shall be considered equivalent to the number of electric vehicles that can be simultaneously charged.*

Exceptions:

1. EVCS not available to the general public and intended for use by a designated vehicle or driver shall not be required to comply with Section 11B-228.3.2. Examples include, but are not limited to, EVCS serving public or private fleet vehicles and EVCS assigned to an employee.

2. In public housing facilities, EVCS intended for use by an EV owner or operator at their residence shall not be required to comply with Section 11B-228.3.2.

***11B*-228.3.2.1 Public use or common use EVCS.** *Where EVCS are provided for public use or common use, EVCS complying with Section 11B-812 shall be provided in accordance with Table 11B-228.3.2.1. Where new EVCS are installed in facilities with existing EVCS, the "Total Number of EVCS at a Facility" in Table 11B-228.3.2.1 shall include both existing and new EVCS.*

***Exception:** All drive-up EVCS shall comply with Section 11B-812.*

***11B*-229 Windows**

***11B*-229.1 General.** Where glazed openings are provided in accessible rooms or spaces for operation by occupants, at least one opening shall comply with *Section 11B*-309. Each glazed opening required by an administrative authority to be operable shall comply with *Section 11B*-309.

Exception:

1. Glazed openings in residential dwelling units required to comply with *Section 11B*-809 shall not be required to comply with *Section 11B*-229.
2. Glazed openings in guest rooms required to provide communication features and in guest rooms required to comply with *Section 11B*-206.5.3 shall not be required to comply with *Section 11B*-229.

***11B*-230 Two-way communication systems**

***11B*-230.1 General.** Where a two-way communication system is provided to gain admittance to a building or facility or to restricted areas within a building or facility, the system shall comply with *Section 11B*-708.

***11B*-231 Judicial facilities**

***11B*-231.1 General.** Judicial facilities shall comply with *Section 11B*-231.

TABLE *11B*-228.3.2.1
ELECTRIC VEHICLE CHARGING STATIONS FOR PUBLIC USE AND COMMON USE

TOTAL NUMBER OF EVCS AT A FACILITY	MINIMUM NUMBER (by type) OF EVCS REQUIRED TO COMPLY WITH SECTION 11B-812[1]		
	Van Accessible	Standard Accessible	Ambulatory
1 to 4	1	0	0
5 to 25	1	1	0
26 to 50	1	1	1
51 to 75	1	2	2
76 to 100	1	3	3
101 and over	1, plus 1 for each 300, or fraction thereof, over 100	3, plus 1 for each 60, or fraction thereof, over 100	3, plus 1 for each 50, or fraction thereof, over 100

1. Where an EV charger can simultaneously charge more than one vehicle, the number of EVCS provided shall be considered equivalent to the number of electric vehicles that can be simultaneously charged.

***11B*-231.2 Courtrooms.** Each courtroom shall comply with *Section 11B*-808.

***11B*-231.3 Holding cells.** Where provided, central holding cells and court-floor holding cells shall comply with *Section 11B*-231.3.

***11B*-231.3.1 Central holding cells.** Where separate central holding cells are provided for adult male, juvenile male, adult female, or juvenile female, one of each type shall comply with *Section 11B*-807.2. Where central holding cells are provided and are not separated by age or sex, at least one cell complying with *Section 11B*-807.2 shall be provided.

***11B*-231.3.2 Court-floor holding cells.** Where separate court-floor holding cells are provided for adult male, juvenile male, adult female, or juvenile female, each courtroom shall be served by one cell of each type complying with *Section 11B*-807.2. Where court-floor holding cells are provided and are not separated by age or sex, courtrooms shall be served by at least one cell complying with *Section 11B*-807.2. Cells may serve more than one courtroom.

***11B*-231.4 Visiting areas.** Visiting areas shall comply with *Section 11B*-231.4.

***11B*-231.4.1 Cubicles and counters.** At least 5 percent, but no fewer than one, of cubicles shall comply with *Section 11B*-902.on both the visitor and detainee sides. Where counters are provided, at least one shall comply with *Section 11B*-904.4.2 on both the visitor and detainee sides.

Exception: The detainee side of cubicles or counters at non-contact visiting areas not serving holding cells required to comply with *Section 11B*-231 shall not be required to comply with *Sections 11B*-902 or *11B*-904.4.2.

***11B*-231.4.2 Partitions.** Where solid partitions or security glazing separate visitors from detainees at least one of each type of cubicle or counter partition shall comply with *Section 11B*-904.6.

***11B*-232 Detention facilities and correctional facilities**

***11B*-232.1 General.** Buildings, facilities, or portions thereof, in which people are detained for penal or correction purposes, or in which the liberty of the inmates is restricted for security reasons shall comply with *Section 11B*-232.

***11B*-232.2 General holding cells and general housing cells.** General holding cells and general housing cells shall be provided in accordance with *Section 11B*-232.2.

Exception: ***Reserved.***

***11B*-232.2.1 Cells with mobility features.** At least *3 percent*, but no fewer than one, of the total number of cells in a facility shall provide mobility features complying with *Section 11B*-807.2.

***11B*-232.2.1.1 Beds.** In cells having more than 25 beds, at least 5 percent of the beds shall have clear floor space complying with *Section 11B*-807.2.3.

***11B*-232.2.1.2 Dispersion.** *Cells with mobility features shall be provided in each classification level.*

***11B*-232.2.1.3 Substitute cells.** *When alterations are made to specific cells, detention and correctional facility operators may satisfy their obligation to provide the required number of cells with mobility features by providing the required mobility features in substitute cells (cells other than those where alterations are originally planned), provided that each substitute cell meets the following conditions:*

1. Located within the same prison site.

2. Integrated with the other cells to the maximum extent feasible.

3. Has equal physical access as the altered cells to areas used by inmates or detainees for visitation, dining, recreation, educational programs, medical services, work programs, religious services, and participation in other programs that the facility offers to inmates or detainees.

***11B*-232.2.1.4 Technically infeasible.** *Where it is technically infeasible to locate a substitute cell within the same prison site in compliance with Section 11B-232.2.1.3, a substitute cell shall be provided at another prison site within the correctional system.*

***11B*-232.2.2 Cells with communication features.** At least 2 percent, but no fewer than one, of the total number of general holding cells and general housing cells equipped with audible emergency alarm systems and permanently installed telephones within the cell shall provide communication features complying with *Section 11B*-807.3.

***11B*-232.3 Special holding cells and special housing cells.** Where special holding cells or special housing cells are provided, at least one cell serving each purpose shall provide mobility features complying with *Section 11B*-807.2. Cells subject to this requirement include, but are not limited to, those used for purposes of orientation, protective custody, administrative or disciplinary detention or segregation, detoxification, and medical isolation.

Exception: ***Reserved.***

***11B*-232.4 Medical care facilities.** Patient bedrooms or cells required to comply with *Section 11B*-223 shall be provided in addition to any medical isolation cells required to comply with *Section 11B*-232.3.

***11B*-232.5 Visiting areas.** Visiting areas shall comply with *Section 11B*-232.5.

***11B*-232.5.1 Cubicles and counters.** At least 5 percent, but no fewer than one, of cubicles shall comply with *Section 11B*-902 on both the visitor and detainee sides. Where counters are provided, at least one shall comply with *Section 11B*-904.4.2 on both the visitor and detainee or inmate sides.

Exception: The inmate or detainee side of cubicles or counters at non-contact visiting areas not serving holding cells or housing cells required to comply with *Section 11B*-232 shall not be required to comply with *Section 11B*-902 or *11B*-904.4.2.

***11B*-232.5.2 Partitions.** Where solid partitions or security glazing separate visitors from detainees or inmates at least one of each type of cubicle or counter partition shall comply with *Section 11B*-904.6.

***11B*-233 Residential facilities**

***11B*-233.1 General.** *Public housing facilities* with residential dwelling units *available for public use* shall comply with *Section 11B-233. See Chapter 2, Section 202 of this code for the definition of Public Housing.*

***11B*-233.2 Reserved.**

11B*-233.3 *Public housing facilities. *Public housing facilities* with residential dwelling units shall comply with *Section 11B*-233.3.

***11B*-233.3.1 Minimum number: new construction.** Newly constructed *public housing* facilities with residential dwelling units shall comply with *Section 11B*-233.3.1.

Exception: Where facilities contain 15 or fewer residential dwelling units, the requirements of *Sections 11B*-233.3.1.1 and *11B-233.3.1.3* shall apply to the total number of residential dwelling units that are constructed under a single contract, or are developed as a whole, whether or not located on a common site.

***11B*-233.3.1.1 Residential dwelling units with mobility features.** In *public housing* facilities with residential dwelling units, at least 5 percent, but no fewer than one unit, of the total number of residential dwelling units shall provide mobility features complying with *Sections 11B*-809.2 through *11B*-809.4 and shall be on an accessible route as required by *Section 11B*-206.

***11B*-233.3.1.2 Residential dwelling units with adaptable features.** *In public housing facilities with residential dwelling units, adaptable residential dwelling units complying with Chapter 11A, Division IV – Dwelling Unit Features shall be provided as required by Sections 11B-233.3.1.2.1 through 11B-233.3.1.2.5. Adaptable residential dwelling units shall be on an accessible route as required by Section 11B-206.*

***Exception:** The number of required adaptable residential dwelling units shall be reduced by the number of units required by Section 11B-233.3.1.1.*

***11B*-233.3.1.2.1 Elevator buildings.** *Residential dwelling units on floors served by an elevator shall be adaptable.*

***11B*-233.3.1.2.2 Non-elevator buildings.** *Ground floor residential dwelling units in non-elevator buildings shall be adaptable.*

***11B*-233.3.1.2.3 Ground floors above grade.** *Where the first floor in a building containing residential dwelling units is a floor above grade, all units on that floor shall be adaptable.*

***11B*-233.3.1.2.4 Multi-story residential dwelling units.** *In elevator buildings, public housing facilities with multi-story residential dwelling units shall comply with the following:*

1. The primary entry of the multi-story residential dwelling unit shall be on an accessible route. In buildings with elevators the primary entry shall be on the floor served by the elevator.

2. At least one powder room or bathroom shall be located on the primary entry level.

3. Rooms or spaces located on the primary entry level shall be served by an accessible route and comply with Chapter 11A, Division IV – Dwelling Unit Features.

***Exception:** In non-elevator buildings, a minimum of 10 percent but not less than one of the ground floor multi-story residential dwelling units shall comply with Section 11B-233.3.1.2.4, calculated using the total number of multi-story residential dwelling units in buildings on a site.*

***11B*-233.3.1.2.5 Public housing facility site impracticality.** *The number of adaptable residential dwelling units required in non-elevator building public housing facilities shall be determined in accordance with Chapter 11A, Section 1150A.1. The remaining ground floor residential dwelling units shall comply with the following requirements:*

1. Grab bar reinforcement complying with Section 11B-609.

2. Doors complying with Section 11B-404.

3. Communication features complying with Section 11B-809.5.5.

4. Electrical receptacle and switches complying with Section 11B-308.1.

5. Toilet and bathing facilities complying with Section 11B-809.4.

6. Kitchen sink removable cabinets complying with Section 11B-606.2, Exception 3.

***11B*-233.3.1.3 Residential dwelling units with communication features.** In *public housing* facilities with residential dwelling units, at least 2 percent, but no fewer than one unit, of the total number of residential dwelling units shall provide communication features complying with *Section 11B*-809.5.

***11B*-233.3.2 Residential dwelling units for sale.** Residential dwelling units *designed and constructed or altered by public entities that will be* offered for sale *to individuals* shall provide accessible features to the extent required by *this chapter.*

***Exception:** Existing residential dwellings or residential dwelling units acquired by public entities that will be offered for resale to individuals without additions or alterations shall not be required to comply with this section.*

***11B*-233.3.3 Additions.** Where an addition to an existing *public housing facility* results in an increase in the number of residential dwelling units, the requirements of *Section 11B*-233.3.1 shall apply only to the residential dwelling units that are added until the total number of residential dwelling units complies with the minimum number required by *Section 11B*-233.3.1. Residential dwelling units required to comply with *Sections 11B*-233.3.1.1 *and 11B-233.3.1.2* shall be on an accessible route as required by *Section 11B*-206.

***11B*-233.3.4 Alterations.** Alterations *to a public housing facility* shall comply with *Section 11B*-233.3.4.

Exception: Where compliance with *Sections 11B*-809.2, *11B*-809.3, or *11B*-809.4 *for units with mobility features or Chapter 11A, Division IV for units with adaptable features* is technically infeasible, or where it is technically infeasible to provide an accessible route to a residential dwelling unit, the entity shall be permitted to alter or construct a comparable residential dwelling unit to comply with *Sections 11B*-809.2 through *11B-809.4 or Chapter 11A, Division IV,* provided that the minimum number of residential dwelling units required by *Sections 11B*-233.3.1.1, *11B*-233.3.1.2 *and 11B-233.3.1.3*, as applicable, is satisfied.

***11B*-233.3.4.1 Alterations to vacated buildings.** Where a building is vacated for the purposes of alteration *for use as public housing,* and the altered building contains more than 15 residential dwelling units, at least 5 percent of the residential dwelling units shall comply with *Sections 11B*-809.2 through *11B*-809.4 and shall be on an accessible route as required by *Section 11B*-206. *Residential dwelling units with adaptable features shall be provided in compliance with Section 11B-233.3.1.2.* In addition, at least 2 percent of the residential dwelling units shall comply with *Section 11B*-809.5.

***Exception:** Where any portion of a building's exterior is preserved, but the interior of the building is removed, including all structural portions of floors and ceilings and a new building intended for use as public housing is constructed behind the existing exterior, the building is considered a new building for determining the application of this chapter.*

***11B*-233.3.4.2 Alterations to individual residential dwelling units.** In *public housing facilities with* individual residential dwelling units, where a bathroom or a kitchen is substantially altered, and at least one other room is altered, the requirements of *Section 11B*-233.3.1 shall apply to the altered residential dwelling units until the total number of residential dwelling units complies with the minimum number required by *Sections 11B*-233.3.1.1, *11B*-233.3.1.2, *and 11B-233.3.1.3.* Residential dwelling units required to comply with *Sections 11B*-233.3.1.1 *and 11B-233.3.1.2* shall be on an accessible route as required by *Section 11B*-206.

Exception: Where *public housing* facilities contain 15 or fewer residential dwelling units, the requirements of *Sections 11B*-233.3.1.1, *11B*-233.3.1.2, *and 11B-233.3.1.3*, shall apply to the total number of residential dwelling units that are altered under a single contract, or are developed as a whole, whether or not located on a common site.

***11B*-233.3.5 Dispersion.** *In public housing facilities, residential* dwelling units required to provide mobility features complying with *Sections 11B*-809.2 through *11B*-809.4 and residential dwelling units required to provide communication features complying with *Section 11B*-809.5, *and adaptable features complying with Chapter 11A, Division IV* shall be dispersed among the various types of residential dwelling units in the facility and shall provide choices of residential dwelling units comparable to, and integrated with, those available to other residents.

Exception: *In public housing facilities where* multi-story residential dwelling units are one of the types of residential dwelling units provided, one-story residential dwelling units shall be permitted as a substitute for multi-story residential dwelling units where equivalent spaces and amenities are provided in the one-story residential dwelling unit.

***11B*-233.3.6 Graduate student and faculty housing at a place of education.** *Housing facilities that are provided by or on behalf of a place of education, with residential dwelling units leased on a year-round basis exclusively to graduate students or faculty, and that do not contain any public use or common use areas available for educational programming, are not subject to Section 11B-224 and shall comply with Section 11B-233.*

***11B*-234 Amusement rides**

***11B*-234.1 General.** Amusement rides shall comply with *Section 11B*-234.

Exception: Mobile or portable amusement rides shall not be required to comply with *Section 11B*-234.

***11B*-234.2 Load and unload areas.** Load and unload areas serving amusement rides shall comply with *Section 11B*-1002.3.

***11B*-234.3 Minimum number.** Amusement rides shall provide at least one wheelchair space complying with *Section 11B*-1002.4, or at least one amusement ride seat designed for transfer complying with *Section 11B*-1002.5, or at least one transfer device complying with *Section 11B*-1002.6.

Exceptions:

1. Amusement rides that are controlled or operated by the rider shall not be required to comply with *Section 11B*-234.3.
2. Amusement rides designed primarily for children, where children are assisted on and off the ride by an adult, shall not be required to comply with *Section 11B*-234.3.
3. Amusement rides that do not provide amusement ride seats shall not be required to comply with *Section 11B*-234.3.

***11B*-234.4 Existing amusement rides.** where existing amusement rides are altered, the alteration shall comply with *Section 11B*-234.4.

***11B*-234.4.1 Load and unload areas.** Where load and unload areas serving existing amusement rides are newly designed and constructed, the load and unload areas shall comply with *Section 11B*-1002.3.

***11B*-234.4.2 Minimum number.** Where the structural or operational characteristics of an amusement ride are altered to the extent that the amusement ride's performance differs from that specified by the manufacturer or the original design, the amusement ride shall comply with *Section 11B*-234.3.

***11B*-235 Recreational boating facilities**

***11B*-235.1 General.** Recreational boating facilities shall comply with *Section 11B*-235.

***11B*-235.2 Boat slips.** Boat slips complying with *Section 11B*-1003.3.1 shall be provided in accordance with Table *11B*-235.2. Where the number of boat slips is not identified, each 40 feet (*12192 mm*) of boat slip edge provided along the perimeter of the pier shall be counted as one boat slip for the purpose of this section.

TABLE *11B*-235.2
BOAT SLIPS

TOTAL NUMBER OF BOAT SLIPS PROVIDED IN FACILITY	MINIMUM NUMBER OF REQUIRED ACCESSIBLE BOAT SLIPS
1 to 25	1
26 to 50	2
51 to 100	3
101 to 150	4
151 to 300	5
301 to 400	6
401 to 500	7
501 to 600	8
601 to 700	9
701 to 800	10
801 to 900	11
901 to 1000	12
1001 and over	12, plus 1 for every 100, or fraction thereof, over 1000

***11B*-235.2.1 Dispersion.** Boat slips complying with *Section 11B*-1003.3.1 shall be dispersed throughout the various types of boat slips provided. Where the minimum number of boat slips required to comply with *Section 11B*-1003.3.1 has been met, no further dispersion shall be required.

***11B*-235.3 Boarding piers at boat launch ramps.** Where boarding piers are provided at boat launch ramps, at least 5 percent, but no fewer than one, of the boarding piers shall comply with *Section 11B*-1003.3.2.

***11B*-236 Exercise machines and equipment**

***11B*-236.1 General.** At least one of each type of exercise machine and equipment shall comply with *Section 11B*-1004.

***11B*-237 Fishing piers and platforms**

***11B*-237.1 General.** Fishing piers and platforms shall comply with *Section 11B*-1005.

***11B*-238 Golf facilities**

***11B*-238.1 General.** Golf facilities shall comply with *Section 11B*-238.

***11B*-238.2 Golf courses.** Golf courses shall comply with *Section 11B*-238.2.

***11B*-238.2.1 Teeing grounds.** Where one teeing ground is provided for a hole, the teeing ground shall be designed and constructed so that a golf car can enter and exit the teeing ground. Where two teeing grounds are provided for a hole, the forward teeing ground shall be designed and constructed so that a golf car can enter and exit the teeing ground. Where three or more teeing grounds are provided for a hole, at least two teeing grounds, including the forward teeing ground, shall be designed and constructed so that a golf car can enter and exit each teeing ground.

Exception: In existing golf courses, the forward teeing ground shall not be required to be one of the teeing grounds on a hole designed and constructed so that a golf car can enter and exit the teeing ground where compliance is not feasible due to terrain.

***11B*-238.2.2 Putting greens.** Putting greens shall be designed and constructed so that a golf car can enter and exit the putting green.

***11B*-238.2.3 Weather shelters.** Where provided, weather shelters shall be designed and constructed so that a golf car can enter and exit the weather shelter and shall comply with *Section 11B*-1006.4.

***11B*-238.3 Practice putting greens, practice teeing grounds, and teeing stations at driving ranges.** At least 5 percent, but no fewer than one, of practice putting greens, practice teeing grounds, and teeing stations at driving ranges shall be designed and constructed so that a golf car can enter and exit the practice putting greens, practice teeing grounds, and teeing stations at driving ranges.

***11B*-239 Miniature golf facilities**

***11B*-239.1 General.** Miniature golf facilities shall comply with *Section 11B*-239.

***11B*-239.2 Minimum number.** At least 50 percent of holes on miniature golf courses shall comply with *Section 11B*-1007.3.

***11B*-239.3 Miniature golf course configuration.** Miniature golf courses shall be configured so that the holes complying with *Section 11B*-1007.3 are consecutive. Miniature golf courses shall provide an accessible route from the last hole complying with *Section 11B*-1007.3 to the course entrance or exit without requiring travel through any other holes on the course.

Exception: One break in the sequence of consecutive holes shall be permitted provided that the last hole on the miniature golf course is the last hole in the sequence.

***11B*-240 Play areas**

***11B*-240.1 General.** Play areas for children ages 2 and over shall comply with *Section 11B*-240. Where separate play areas are provided within a site for specific age groups, each play area shall comply with *Section 11B*-240.

Exceptions:

1. Play areas located in family child care facilities where the proprietor actually resides shall not be required to comply with *Section 11B*-240.
2. In existing play areas, where play components are relocated for the purposes of creating safe use zones and the ground surface is not altered or extended for more than one use zone, the play area shall not be required to comply with *Section 11B*-240.
3. Amusement attractions shall not be required to comply with *Section 11B*-240.
4. Where play components are altered and the ground surface is not altered, the ground surface shall not be required to comply with *Section 11B*-1008.2.6 unless required by *Section 11B*-202.4.

***11B*-240.1.1 Additions.** Where play areas are designed and constructed in phases, the requirements of *Section 11B*-240 shall apply to each successive addition so that when the addition is completed, the entire play area complies with all the applicable requirements of *Section 11B*-240.

***11B*-240.2 Play components.** Where provided, play components shall comply with *Section 11B*-240.2.

***11B*-240.2.1 Ground level play components.** Ground level play components shall be provided in the number and types required by *Section 11B*-240.2.1. Ground level play components that are provided to comply with *Section 11B*-240.2.1.1 shall be permitted to satisfy the additional number required by *Section 11B*-240.2.1.2 if the minimum required types of play components are satisfied. Where two or more required ground level play components are provided, they shall be dispersed throughout the play area and integrated with other play components.

TABLE *11B*-240.2.1.2
NUMBER AND TYPES OF GROUND LEVEL PLAY COMPONENTS REQUIRED TO BE ON ACCESSIBLE ROUTES

NUMBER OF ELEVATED PLAY COMPONENTS PROVIDED	MINIMUM NUMBER OF GROUND LEVEL PLAY COMPONENTS REQUIRED TO BE ON AN ACCESSIBLE ROUTE	MINIMUM NUMBER OF DIFFERENT TYPES OF GROUND LEVEL PLAY COMPONENTS REQUIRED TO BE ON AN ACCESSIBLE ROUTE
1	Not applicable	Not applicable
2 to 4	1	1
5 to 7	2	2
8 to 10	3	3
11 to 13	4	3
14 to 16	5	3
17 to 19	6	3
20 to 22	7	4
23 to 25	8	4
26 and over	8, plus 1 for each additional 3, or fraction thereof, over 25	5

***11B*-240.2.1.1 Minimum number and types.** Where ground level play components are provided, at least one of each type shall be on an accessible route and shall comply with *Section 11B*-1008.4.

***11B*-240.2.1.2 Additional number and types.** Where elevated play components are provided, ground level play components shall be provided in accordance with Table *11B*-240.2.1.2 and shall comply with *Section 11B*-1008.4.

Exception: If at least 50 percent of the elevated play components are connected by a ramp and at least 3 of the elevated play components connected by the ramp are different types of play components, the play area shall not be required to comply with *Section 11B*-240.2.1.2.

***11B*-240.2.2 Elevated play components.** Where elevated play components are provided, at least 50 percent shall be on an accessible route and shall comply with *Section 11B*-1008.4.

***11B*-241 Saunas and steam rooms**

***11B*-241.1 General.** Where provided, saunas and steam rooms shall comply with *Section 11B*-612.

Exception: Where saunas or steam rooms are clustered at a single location, no more than 5 percent of the saunas and steam rooms, but no fewer than one, of each type in each cluster shall be required to comply with *Section 11B*-612.

***11B*-242 Swimming pools, wading pools, and spas**

***11B*-242.1 General.** Swimming pools, wading pools, and spas shall comply with *Section 11B*-242.

***11B*-242.2 Swimming Pools.** At least two accessible means of entry shall be provided for swimming pools. Accessible means of entry shall be swimming pool lifts complying with *Section 11B*-1009.2; sloped entries complying with *Section 11B*-1009.3; transfer walls complying with *Section 11B*-1009.4; transfer systems complying with *Section 11B*-1009.5; and pool stairs complying with *Section 11B*-1009.6. At least one accessible means of entry provided shall comply with *Sections 11B*-1009.2 or *11B*-1009.3.

Exceptions:

1. Where a swimming pool has less than 300 linear feet (91 m) of swimming pool wall, no more than one accessible means of entry shall be required provided that the accessible means of entry is a swimming pool lift complying with *Section 11B*-1009.2 or sloped entry complying with *Section 11B*-1009.3.
2. Wave action pools, leisure rivers, sand bottom pools, and other pools where user access is limited to one area shall not be required to provide more than one accessible means of entry provided that the accessible means of entry is a swimming pool lift complying with *Section 11B*-1009.2, a sloped entry complying with *Section 11B*-1009.3, or a transfer system complying with *Section 11B*-1009.5.
3. Catch pools shall not be required to provide an accessible means of entry provided that the catch pool edge is on an accessible route.

***11B*-242.3 Wading pools.** At least one accessible means of entry shall be provided for wading pools. Accessible means of entry shall comply with sloped entries complying with *Section 11B*-1009.3.

***11B*-242.4 Spas.** At least one accessible means of entry shall be provided for spas. Accessible means of entry shall comply with swimming pool lifts complying with *Section 11B*-1009.2; transfer walls complying with *Section 11B*-1009.4; or transfer systems complying with *Section 11B*-1009.5.

Exception: Where spas are provided in a cluster, no more than 5 percent, but no fewer than one, spa in each cluster shall be required to comply with *Section 11B*-242.4.

***11B*-243 Shooting facilities with firing positions**

***11B*-243.1 General.** Where shooting facilities with firing positions are designed and constructed at a site, at least 5 percent, but no fewer than one, of each type of firing position shall comply with *Section 11B*-1010.

***11B*-244 Religious facilities**

***11B*-244.1 General.** *Religious facilities shall be accessible in accordance with the provisions of this code. Where specific areas within religious facilities contain more than one use, each portion shall comply with the applicable requirements for that use.*

***11B*-245 Public accommodations located in private residences**

***11B*-245.1 General.** *Public accommodations located in private residences shall comply with Section 11B-245.*

***11B*-245.2 Application.** *When a public accommodation is located in a private residence, that portion used exclusively in the operation of the public accommodation or that portion used both for the public accommodation and for residential purposes is covered by the new construction and alterations requirements of this chapter.*

***Exception:** The portion of the residence used exclusively as a residence is not required to be accessible in accordance with this chapter.*

***11B*-245.3 Accessible elements required.** *The accessible portion of the residence extends to those elements used to enter the commercial facility, including the front sidewalk, if any, the door or entryway, and hallways; and those portions of the residence, interior or exterior, available to or used by employees or visitors of the commercial facility, including restrooms.*

***11B*-246 Outdoor developed areas**

***11B*-246.1 General.** *Outdoor developed areas shall comply with Section 11B-246.*

Exceptions:

1. Where the enforcing agency finds that, in specific areas, the natural environment would be materially damaged by compliance with these regulations, such areas shall be subject to these regulations only to the extent that such material damage would not occur.

2. Automobile access or accessible routes are not required when the enforcing agency determines compliance with this chapter would create an unreasonable hardship as defined in Chapter 2, Section 202.

***11B*-246.2 Camping facilities.** *In camping facilities where campsites are provided, at least two campsites and one additional campsite for each 100 campsites or fraction thereof, shall be accessed by and connected to sanitary facilities by travel routes with a maximum slope of 1:12. Permanent toilet and bathing facilities serving campsites shall comply with Section 11B-603.*

***11B*-246.3 Beaches.** *Beaches shall be accessible.*

***11B*-246.4 Day use areas and vista points.** *Day use areas, vista points, and similar areas shall be accessible.*

***11B*-246.5 Picnic areas.** *Where picnic tables are provided, at least one picnic table, and one additional table for each 20 tables or fraction thereof, shall be accessible and comply with Section 11B-902.*

***11B*-246.6 Parking lots.** *Parking lots shall comply with Sections 11B-208 and 11B-502 and shall be provided with curb cuts leading to adjacent walks, paths or trails.*

***11B*-246.7 Trails and paths.** *Trails, paths and nature walk areas, or portions of them, shall be constructed with gradients permitting at least partial use by wheelchair occupants. Buildings and other functional areas shall be served by paths or walks with firm and stable surfaces.*

***11B*-246.8 Nature trails.** *Nature trails and similar educational and informational areas shall be accessible to individuals with vision impairments by the provision of rope guidelines, raised Arabic numerals and symbols, or other similar guide and assistance devices.*

***11B*-247 Detectable warnings and detectable directional texture**

***11B*-247.1 Detectable warnings.**

***11B*-247.1.1 General.** *Detectable warnings shall be provided in accordance with Section 11B-247.1 and shall comply with Section 11B-705.1.*

***11B*-247.1.2 Where required.** *Detectable warnings shall be provided where required by Section 11B-247.1.2.*

***11B*-247.1.2.1 Platform edges.** *Platform boarding edges shall have detectable warnings complying with Sections 11B-705.1.1 and 11B-705.1.2.1.*

***11B*-247.1.2.2 Curb ramps.** *Curb ramps shall have detectable warnings complying with Sections 11B-705.1.1 and 11B-705.1.2.2.*

***11B*-247.1.2.3 Islands or cut-through medians.** *Islands or cut-through medians shall have detectable warnings complying with Sections 11B-705.1.1 and 11B-705.1.2.3.*

***11B*-247.1.2.4 Bus stops.** *Where detectable warnings are provided at bus stop boarding and alighting areas in compliance with Section 11B-810.2.3, detectable warnings shall comply with Sections 11B-705.1.1 and 11B-705.1.2.4.*

***11B*-247.1.2.5 Hazardous vehicular areas.** *If a walk crosses or adjoins a vehicular way, and the walking surfaces are not separated by curbs, railings or other elements between the pedestrian areas and vehicular areas, the boundary between the areas shall be defined by a continuous detectable warning complying with Sections 11B-705.1.1 and 11B-705.1.2.5.*

***11B*-247.1.2.6 Reflecting pools.** *The edges of reflecting pools shall be protected by railings, walls, warning curbs or detectable warnings complying with Sections 11B-705.1.1 and 11B-705.1.2.6.*

***11B*-247.1.2.7 Track crossings.** *Where it is necessary to cross tracks to reach transit boarding platforms, detectable warnings complying with Sections 11B-705.1.1 and 11B-705.1.2.7 shall be provided.*

***11B*-247.2 Detectable directional texture.** *At transit boarding platforms, the pedestrian access shall be identified with a detectable directional texture complying with Section 11B-705.2.*

BUREAU OF ENGINEERING
OFFICIAL RECORD

THE CITY OF LOS ANGELES OR ITS OFFICERS OR AGENTS SHALL NOT BE RESPONSIBLE FOR THE ACCURACY OR COMPLETENESS OF ELECTRONIC COPIES OF THIS PLAN SHEET.
FILE PATH: A360://Studio City Recreation Center/SCRC-Project Model_Central_Final.rvt
SHEET ISSUE DATE: 01/01/14
REVISION DATES (DESIGN STAGE ONLY)

CITY OF LOS ANGELES
DEPARTMENT OF PUBLIC WORKS
BUREAU OF ENGINEERING
CITY OF LOS ANGELES
ENGINEERING
TED ALLEN, PE
CITY ENGINEER
DATE: 1-24-2019
ARCHITECTURAL DIVISION
LIC. NO.: C 23333
ARCHITECT: ROBERT LOMELIN 1-24-2019
DESIGNED BY: Z. AKHTER, M. CHAVARRIA, A. KIM, M. LAM 1-24-2019
DRAWN BY: Z. AKHTER, M. CHAVARRIA, A. KIM 1-24-2019
CHECKED BY: ROBERT LOMELIN 1-24-2019
APPROVED BY: MAHMOOD KARIMZADEH, AIA, DEPUTY CITY ENGINEER 1-24-2019
NO. REVISION DESCRIPTION DATE BY
BUILDING NO. -
INDEX NO. RP-300106
CLIENT: DEPARTMENT OF RECREATION AND PARKS
GENERAL MANAGER: MICHAEL A. SHULL
SHEET TITLE: TITLE 24- DISABLED ACCESS REQUIREMENTS
PROJECT: STUDIO CITY RECREATION CENTER
ADDRESS: 12621 RYE STREET, STUDIO CITY, CA 91604
WORK ORDER NO. E170267B
PLAN FILE NO. 860
DRAWING NO. G104
SHEET 12 OF SHEETS 211
PLOTTED:7/1/2019 11:34:32 AM

DIVISION 3: BUILDING BLOCKS

11B-301 General

***11B*-301.1 Scope.** The provisions of *Division* 3 shall apply where required by *Division* 2 or where referenced by a requirement in this *chapter*.

11B-302 Floor or ground surfaces

***11B*-302.1 General.** Floor and ground surfaces shall be stable, firm, and slip resistant and shall comply with *Section 11B*-302.

Exceptions:

1. Within animal containment areas, floor and ground surfaces shall not be required to be stable, firm, and slip resistant.
2. Areas of sport activity shall not be required to comply with *Section 11B*-302.

***11B*-302.2 Carpet.** Carpet or carpet tile shall be securely attached and shall have a firm cushion, pad, or backing or no cushion or pad. Carpet or carpet tile shall have a level loop, textured loop, level cut pile, level cut/uncut pile texture. Pile height shall be $^1/_2$ inch (*12.7* mm) maximum. Exposed edges of carpet shall be fastened to floor surfaces and shall have trim on the entire length of the exposed edge. Carpet edge trim shall comply with *Section 11B*-303.

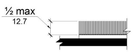

FIGURE *11B*-302.2
CARPET PILE HEIGHT

***11B*-302.3 Openings.** Openings in floor or ground surfaces shall not allow passage of a sphere more than $^1/_2$ inch (*12.7* mm) diameter except as allowed in *Sections 11B*-407.4.3, *11B*-409.4.3, *11B*-410.4, *11B*-810.5.3 and *11B*-810.10. Elongated openings shall be placed so that the long dimension is perpendicular to the dominant direction of travel.

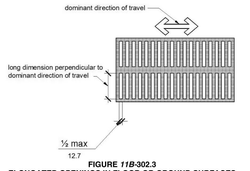

FIGURE *11B*-302.3
ELONGATED OPENINGS IN FLOOR OR GROUND SURFACES

11B-303 Changes in level

***11B*-303.1 General.** Where changes in level are permitted in floor or ground surfaces, they shall comply with *Section 11B*-303.

Exceptions:

1. Animal containment areas shall not be required to comply with *Section 11B*-303.
2. Areas of sport activity shall not be required to comply with *Section 11B*-303.

***11B*-303.2 Vertical.** Changes in level of $^1/_4$ inch (6.4 mm) high maximum shall be permitted to be vertical *and without edge treatment*.

FIGURE *11B*-303.2
VERTICAL CHANGE IN LEVEL

***11B*-303.3 Beveled.** Changes in level between $^1/_4$ inch (6.4 mm) high minimum and $^1/_2$ inch (*12.7* mm) high maximum shall be beveled with a slope not steeper than 1:2.

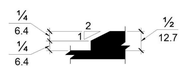

FIGURE *11B*-303.3
BEVELED CHANGE IN LEVEL

***11B*-303.4 Ramps.** Changes in level greater than $^1/_2$ inch (*12.7* mm) high shall be ramped, and shall comply with *Section 11B*-405 or *11B*-406.

***11B-303.5 Warning curbs.** Abrupt changes in level exceeding 4 inches (102 mm) in a vertical dimension between walks, sidewalks or other pedestrian ways and adjacent surfaces or features shall be identified by warning curbs at least 6 inches (152 mm) in height above the walk or sidewalk surface.*

Exceptions:

1. *A warning curb is not required between a walk or sidewalk and an adjacent street or driveway.*
2. *A warning curb is not required when a guard or handrail is provided with a guide rail centered 2 inches (51 mm) minimum and 4 inches (102 mm) maximum above the surface of the walk or sidewalk.*

11B-304 Turning space

***11B*-304.1 General.** Turning space shall comply with *Section 11B*-304.

***11B*-304.2 Floor or ground surfaces.** Floor or ground surfaces of a turning space shall comply with *Section 11B*-302. Changes in level are not permitted.

Exception: Slopes not steeper than 1:48 shall be permitted.

***11B*-304.3 Size.** Turning space shall comply with *Section 11B*-304.3.1 or *11B*-304.3.2.

***11B*-304.3.1 Circular space.** The turning space shall be a space of 60 inches (*1524* mm) diameter minimum. The space shall be permitted to include knee and toe clearance complying with *Section 11B*-306.

***11B*-304.3.2 T-Shaped space.** The turning space shall be a T-shaped space within a 60 inch (*1524* mm) square minimum with arms and base 36 inches (*914* mm) wide minimum. Each arm of the T shall be clear of obstructions 12 inches (305 mm) minimum in each direction and the base shall be clear of obstructions 24 inches (610 mm) minimum. The space shall be permitted to include knee and toe clearance complying with *Section 11B*-306 only at the end of either the base or one arm.

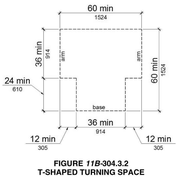

FIGURE *11B*-304.3.2
T-SHAPED TURNING SPACE

***11B*-304.4 Door swing.** Doors shall be permitted to swing into turning spaces.

11B-305 Clear floor or ground space

***11B*-305.1 General.** Clear floor or ground space shall comply with *Section 11B*-305.

***11B*-305.2 Floor or ground surfaces.** Floor or ground surfaces of a clear floor or ground space shall comply with *Section 11B*-302. Changes in level are not permitted.

Exception: Slopes not steeper than 1:48 shall be permitted.

***11B*-305.3 Size.** The clear floor or ground space shall be 30 inches (762 mm) minimum by 48 inches (*1219* mm) minimum.

***11B*-305.4 Knee and toe clearance.** Unless otherwise specified, clear floor or ground space shall be permitted to include knee and toe clearance complying with *Section 11B*-306.

***11B*-305.5 Position.** Unless otherwise specified, clear floor or ground space shall be positioned for either forward or parallel approach to an element.

***11B*-305.6 Approach.** One full unobstructed side of the clear floor or ground space shall adjoin an accessible route or adjoin another clear floor or ground space. *Clear floor or ground space may overlap an accessible route, unless specifically prohibited elsewhere in this chapter.*

***11B*-305.7 Maneuvering clearance.** Where a clear floor or ground space is located in an alcove or otherwise confined on all or part of three sides, additional maneuvering clearance shall be provided in accordance with *Sections 11B*-305.7.1 and *11B*-305.7.2.

***11B*-305.7.1 Forward approach.** Alcoves shall be 36 inches (*914* mm) wide minimum where the depth exceeds 24 inches (610 mm).

***11B*-305.7.2 Parallel approach.** Alcoves shall be 60 inches (*1524* mm) wide minimum where the depth exceeds 15 inches (*381* mm).

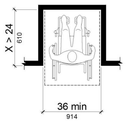

FIGURE *11B*-305.7.1
MANEUVERING CLEARANCE IN AN ALCOVE, FORWARD APPROACH

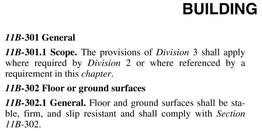

FIGURE *11B*-307.4
VERTICAL CLEARANCE

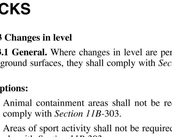

FIGURE *11B*-308.2.1
UNOBSTRUCTED FORWARD REACH

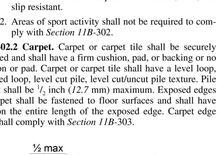

FIGURE 11B-307.4.1
GUY BRACES

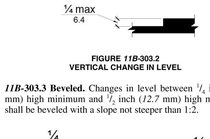

FIGURE *11B*-308.2.2
OBSTRUCTED HIGH FORWARD REACH

***11B*-307.5 Required clear width.** Protruding objects shall not reduce the clear width required for accessible routes.

11B-308 Reach ranges

***11B*-308.1 General.** Reach ranges shall comply with *Section 11B*-308.

***11B-308.1.1 Electrical switches.** Controls and switches intended to be used by the occupant of a room or area to control lighting and receptacle outlets, appliances or cooling, heating and ventilating equipment, shall comply with Section 11B-308 except the low reach shall be measured to the bottom of the outlet box and the high reach shall be measured to the top of the outlet box.*

***11B-308.1.2 Electrical receptacle outlets.** Electrical receptacle outlets on branch circuits of 30 amperes or less and communication system receptacles shall comply with Section 11B-308 except the low reach shall be measured to the bottom of the outlet box and the high reach shall be measured to the top of the outlet box.*

***11B*-308.2 Forward reach.**

***11B*-308.2.1 Unobstructed.** Where a forward reach is unobstructed, the high forward reach shall be 48 inches (*1219* mm) maximum and the low forward reach shall be 15 inches (*381* mm) minimum above the finish floor or ground.

***11B*-308.2.2 Obstructed high reach.** Where a high forward reach is over an obstruction, the clear floor space shall extend beneath the element for a distance not less than the required reach depth over the obstruction. The high forward reach shall be 48 inches (*1219* mm) maximum where the reach depth is 20 inches (*508* mm) maximum. Where the reach depth exceeds 20 inches (*508* mm), the high forward reach shall be 44 inches (*1118* mm) maximum and the reach depth shall be 25 inches (635 mm) maximum.

***11B*-308.3 Side reach.**

***11B*-308.3.1 Unobstructed.** Where a clear floor or ground space allows a parallel approach to an element and the side reach is unobstructed, the high side reach shall be 48 inches (*1219* mm) maximum and the low side reach shall be 15 inches (*381* mm) minimum above the finish floor or ground.

Exceptions:

1. An obstruction shall be permitted between the clear floor or ground space and the element where the depth of the obstruction is 10 inches (*254* mm) maximum.
2. Operable parts of fuel dispensers shall be permitted to be 54 inches (*1372* mm) maximum measured from the surface of the vehicular way where fuel dispensers are installed on existing curbs.

***11B*-308.3.2 Obstructed high reach.** Where a clear floor or ground space allows a parallel approach to an element and the high side reach is over an obstruction, the height of the obstruction shall be 34 inches (*864* mm) maximum and the depth of the obstruction shall be 24 inches (610 mm) maximum. The high side reach shall be 48 inches (*1219* mm) maximum for a reach depth of 10 inches (*254* mm) maximum. Where the reach depth exceeds 10 inches (*254* mm), the high side reach shall be 46 inches (*1168* mm) maximum for a reach depth of 24 inches (*610* mm) maximum.

Exceptions:

1. The top of washing machines and clothes dryers shall be permitted to be 36 inches (*914* mm) maximum above the finish floor.
2. Operable parts of fuel dispensers shall be permitted to be 54 inches (*1372* mm) maximum measured from the surface of the vehicular way where fuel dispensers are installed on existing curbs.

11B-308.4 Suggested reach ranges for children. Where building elements such as coat hooks, lockers, or operable parts are designed for use primarily by children, the suggested dimensions of Table 11B-308.4 shall be permitted. These dimensions apply to either forward or side reaches.

TABLE 11B-308.4
SUGGESTED DIMENSIONS FOR CHILDREN'S USE

SUGGESTED REACH RANGES FOR CHILDREN AGES 3 THROUGH 12			
Forward or Side Reach	*Ages 3 and 4*	*Ages 5 through 8*	*Ages 9 through 12*
High (maximum)	*36 inches (914 mm)*	*40 inches (1016 mm)*	*44 inches (1118 mm)*
Low (minimum)	*20 inches (508 mm)*	*18 inches (457 mm)*	*16 inches (406 mm)*

11B-309 Operable parts

***11B*-309.1 General.** Operable parts shall comply with *Section 11B*-309.

***11B*-309.2 Clear floor space.** A clear floor or ground space complying with *Section 11B*-305 shall be provided.

***11B*-309.3 Height.** Operable parts shall be placed within one or more of the reach ranges specified in *Section 11B*-308.

***11B*-309.4 Operation.** Operable parts shall be operable with one hand and shall not require tight grasping, pinching, or twisting of the wrist. The force required to activate operable parts shall be 5 pounds (22.2 N) maximum.

Exception: Gas pump nozzles *and electric vehicle connectors* shall not be required to provide operable parts that have an activating force of 5 pounds (22.2 N) maximum.

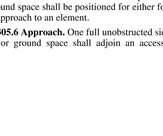

FIGURE *11B*-308.3.1
UNOBSTRUCTED SIDE REACH

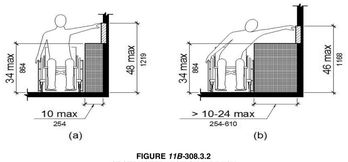

FIGURE *11B*-308.3.2
OBSTRUCTED HIGH SIDE REACH

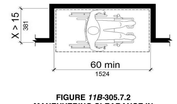

FIGURE *11B*-305.7.2
MANEUVERING CLEARANCE IN AN ALCOVE, PARALLEL APPROACH

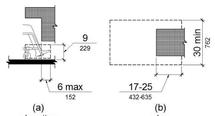

FIGURE *11B*-306.2
TOE CLEARANCE

11B-306 Knee and toe clearance

***11B*-306.1 General.** Where space beneath an element is included as part of clear floor or ground space or turning space, the space shall comply with *Section 11B*-306. Additional space shall not be prohibited beneath an element but shall not be considered as part of the clear floor or ground space or turning space.

***11B*-306.2 Toe clearance**

***11B*-306.2.1 General.** Space under an element between the finish floor or ground and 9 inches (*229* mm) above the finish floor or ground shall be considered toe clearance and shall comply with *Section 11B*-306.2.

***11B*-306.2.2 Maximum depth.** Toe clearance shall extend 25 inches (635 mm) maximum under an element.

***Exception:** Toe clearance shall extend 19 inches (483 mm) maximum under lavatories required to be accessible by Section 11B-213.3.4.*

***11B*-306.2.3 Minimum required depth.** Where toe clearance is required at an element as part of a clear floor space, the toe clearance shall extend 17 inches (*432* mm) minimum under the element.

Exceptions:

1. *The toe clearance shall extend 19 inches (483 mm) minimum under sinks required to be accessible by Section 11B-212.3.*
2. *The toe clearance shall extend 19 inches (483 mm) minimum under built-in dining and work surfaces required to be accessible by Section 11B-226.1.*

***11B*-306.2.4 Additional clearance.** Space extending greater than 6 inches (*152* mm) beyond the available knee clearance at 9 inches (*229* mm) above the finish floor or ground shall not be considered toe clearance.

***11B*-306.2.5 Width.** Toe clearance shall be 30 inches (*762* mm) wide minimum.

11B-306.3 Knee clearance.

***11B*-306.3.1 General.** Space under an element between 9 inches (*229* mm) and 27 inches (*686* mm) above the finish floor or ground shall be considered knee clearance and shall comply with *Section 11B*-306.3.

***Exception:** At lavatories required to be accessible by Section 11B-213.3.4, space between 9 inches (229 mm) and 29 inches (737 mm) above the finish floor or ground, shall be considered knee clearance.*

***11B*-306.3.2 Maximum depth.** Knee clearance shall extend 25 inches (635 mm) maximum under an element at 9 inches (229 mm) above the finish floor or ground.

***11B*-306.3.3 Minimum required depth.** Where knee clearance is required under an element as part of a clear floor space, the knee clearance shall be 11 inches (*279* mm) deep minimum at 9 inches (*229* mm) above the finish floor or ground, and 8 inches (*203* mm) deep minimum at 27 inches (686 mm) above the finish floor or ground.

Exceptions:

1. *At lavatories required to be accessible by Section 11B-213.3.4, the knee clearance shall be 27 inches (686 mm) high minimum above the finish floor or ground at a depth of 8 inches (203 mm) minimum increasing to 29 inches (737 mm) high minimum above the finish floor or ground at the front edge of a counter with a built-in lavatory or at the front edge of a wall-mounted lavatory fixture.*
2. *At dining and work surfaces required to be accessible by Section 11B-226.1, knee clearance shall extend 19 inches (483 mm) deep minimum at 27 inches (686 mm) above the finish floor or ground.*

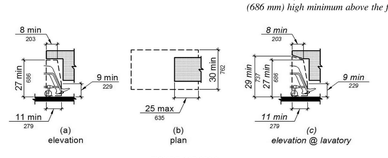

FIGURE *11B*-306.3
KNEE CLEARANCE

DIVISION 4: ACCESSIBLE ROUTES

11B-401 General

***11B*-401.1 Scope.** The provisions of *Division* 4 shall apply where required by *Division* 2 or where referenced by a requirement in this *chapter*.

11B-402 Accessible routes

***11B*-402.1 General.** Accessible routes shall comply with *11B*-402.

***11B*-402.2 Components.** Accessible routes shall consist of one or more of the following components: walking surfaces with a running slope not steeper than 1:20, doorways, ramps, curb ramps excluding the flared sides, elevators, and platform lifts. All components of an accessible route shall comply with the applicable requirements of *Division* 4.

11B-403 Walking surfaces

***11B*-403.1 General.** Walking surfaces that are a part of an accessible route shall comply with *Section 11B*-403.

***11B*-403.2 Floor or ground surface.** Floor or ground surfaces shall comply with *Section 11B*-302.

***11B*-403.3 Slope.** The running slope of walking surfaces shall not be steeper than 1:20. The cross slope of walking surfaces shall not be steeper than 1:48.

***Exception:** The running slope of sidewalks shall not exceed the general grade established for the adjacent street or highway.*

***11B*-403.4 Changes in level.** Changes in level shall comply with *Section 11B*-303.

***11B*-403.5 Clearances.** Walking surfaces shall provide clearances complying with *Section 11B*-403.5.

Exception: Within employee work areas, clearances on common use circulation paths shall be permitted to be decreased by work area equipment provided that the decrease is essential to the function of the work being performed.

***11B*-403.5.1 Clear width.** Except as provided in *Sections 11B*-403.5.2 and *11B*-403.5.3, the clear width of walking surfaces shall be 36 inches (*914* mm) minimum.

Exceptions:

1. The clear width shall be permitted to be reduced to 32 inches (*813* mm) minimum for a length of 24 inches (610 mm) maximum provided that reduced width segments are separated by segments that are 48 inches (*1219* mm) long minimum and 36 inches (*914* mm) wide minimum.
2. *The clear width for walking surfaces in corridors serving an occupant load of 10 or more shall be 44 inches (1118 mm) minimum.*
3. *The clear width for sidewalks and walks shall be 48 inches (1219 mm) minimum. When, because of right-of-way restrictions, natural barriers or other existing conditions, the enforcing agency determines that compliance with the 48-inch (1219 mm) clear sidewalk width would create an unreasonable hardship, the clear width may be reduced to 36 inches (914 mm).*
4. *The clear width for aisles shall be 36 inches (914 mm) minimum if serving elements on only one side, and 44 inches (1118 mm) minimum if serving elements on both sides.*
5. *The clear width for accessible routes to accessible toilet compartments shall be 44 inches (1118 mm) except for door-opening widths and door swings.*

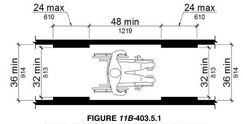

FIGURE *11B*-403.5.1
CLEAR WIDTH OF AN ACCESSIBLE ROUTE

***11B*-403.5.2 Clear width at turn.** Where the accessible route makes a 180 degree turn around an element which is less than 48 inches (*1219* mm) wide, clear width shall be 42 inches (*1067* mm) minimum approaching the turn, 48 inches (*1219* mm) minimum at the turn and 42 inches (*1067* mm) minimum leaving the turn.

Exception: Where the clear width at the turn is 60 inches (*1524* mm) minimum compliance with *Section 11B*-403.5.2 shall not be required.

***11B*-403.5.3 Passing spaces.** An accessible route with a clear width less than 60 inches (*1524* mm) shall provide passing spaces at intervals of 200 feet (*60,960 mm*) maximum. Passing spaces shall be either: a space 60 inches (*1524* mm) minimum by 60 inches (*1524* mm) minimum; or, an intersection of two walking surfaces providing a T-shaped space complying with *Section 11B*-304.3.2 where the base and arms of the T-shaped space extend 48 inches (*1219* mm) minimum beyond the intersection.

***11B*-403.6 Handrails.** Where handrails are provided along walking surfaces with running slopes not steeper than 1:20 they shall comply with *Section 11B*-505.

***11B-403.7 Continuous gradient.** All walks with continuous gradients shall have resting areas, 60 inches (1524 mm) in length, at intervals of 400 feet (121,920 mm) maximum. The resting area shall be at least as wide as the walk. The slope of the resting area in all directions shall be 1:48 maximum.*

***11B*-403.7.1 Slope.** Slopes of curb ramps shall comply with *Section 11B*-406.1.

***11B*-403.7.2 Counter slope.** Counter slopes of adjoining gutters and road surfaces immediately adjacent to the curb ramp shall not be steeper than 1:20. The adjacent surfaces at transitions at curb ramps to walks, gutters and streets shall be at the same level.

***11B*-403.7.3 Sides of curb ramps.** Where curb ramps are provided, they shall be contained within the width of the pedestrian way and shall not project into vehicular traffic lanes, except for those parts which are necessary to provide sloped sides for the curb ramp.

***11B*-403.7.4 Landings.** Landings shall be provided at the tops of curb ramps. The landing clear length shall be 36 inches (*914* mm) minimum.

***11B*-403.7.5 Diagonal curb ramps.** Diagonal curb ramps with returned curbs or other edge protection shall have a clear space at the bottom of the curb ramp 48 inches (*1219* mm) minimum in each direction, exclusive of flared sides, which shall be entirely within the marked crosswalk.

***11B*-403.7.6 Built-up curb ramps.** Built-up curb ramps shall be entirely within the marked crosswalk.

***11B*-403.8 Ramps.** Ramps on accessible routes shall comply with *Section 11B*-405.

***11B*-403.9 Stairways.** Stairways on accessible routes shall comply with *Section 11B*-504.

***11B*-403.10 Handrails.** Handrails shall comply with *Section 11B*-505.

***11B*-403.11 Elevators.** Elevators on accessible routes shall comply with *Section 11B*-407.

***11B*-403.11.1 Destination-oriented elevators.** Destination-oriented elevators shall comply with *Section 11B*-407.2.3.

***11B*-403.12 Platform lifts.** Platform lifts on accessible routes shall comply with *Section 11B*-410.

***11B*-403.13 Doors, doorways, and gates.** Doors, doorways, and gates that are part of accessible routes shall comply with *Section 11B*-404.

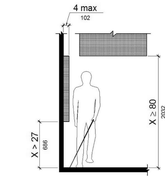

FIGURE *11B*-307.2
LIMITS OF PROTRUDING OBJECTS

11B-307 Protruding objects

***11B*-307.1 General.** Protruding objects shall comply with *Section 11B*-307.

***11B*-307.2 Protrusion limits.** Objects with leading edges more than 27 inches (686 mm) and not more than 80 inches (*2032* mm) above the finish floor or ground shall protrude 4 inches (*102* mm) maximum horizontally into the circulation path.

Exception: Handrails shall be permitted to protrude 4½ inches (*114* mm) maximum.

***11B*-307.3 Post-mounted objects.** Free-standing objects mounted on posts or pylons shall overhang circulation paths 12 inches (305 mm) maximum when located 27 inches (686 mm) minimum and 80 inches (*2032* mm) maximum above the finish floor or ground. Where a sign or other obstruction is mounted between posts or pylons and the clear distance between the posts or pylons is greater than 12 inches (305 mm), the lowest edge of such sign or obstruction shall be 27 inches (686 mm) maximum or 80 inches (*2032* mm) minimum above the finish floor or ground.

***11B-307.3.1 Edges and corners.** Where signs or other objects are mounted on posts or pylons, and their bottom edges are less than 80 inches (2032 mm) above the floor or ground surface, the edges of such signs and objects shall be rounded or eased and the corners shall have a minimum radius of $^1/_4$ inch (3.2 mm).*

***11B*-307.4 Vertical clearance.** Vertical clearance shall be 80 inches (*2032* mm) high minimum. Guardrails or other barriers shall be provided where the vertical clearance is less than 80 inches (*2032* mm) high. The leading edge of such guardrail or barrier shall be located 27 inches (*686* mm) maximum above the finish floor or ground.

Exception: Door closers and door stops shall be permitted to be 78 inches (*1981* mm) minimum above the finish floor or ground.

***11B-307.4.1 Guy braces.** Where a guy support is used within either the width of a circulation path or 24 inches (610 mm) maximum outside of a circulation path, a vertical guy brace, sidewalk guy or similar device shall be used to prevent a hazard or an overhead obstruction.*

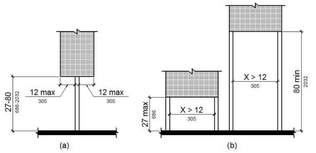

FIGURE *11B*-307.3
POST-MOUNTED PROTRUDING OBJECTS

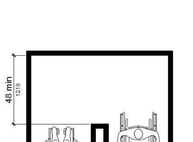

FIGURE *11B*-403.5.2
CLEAR WIDTH AT TURN

11B-404 Doors, doorways, and gates

***11B*-404.1 General.** Doors, doorways, and gates that are part of an accessible route shall comply with *Section 11B*-404.

Exceptions:

1. Doors, doorways, and gates designed to be operated only by security personnel shall not be required to comply with *Sections 11B*-404.2.7, *11B*-404.2.8, *11B*-404.2.9, *11B*-404.3.2 and *11B*-404.3.4 through *11B*-404.3.7. *A sign visible from the approach side complying with Section 11B-703.5 shall be posted stating "Entry restricted and controlled by security personnel".*
2. *At detention and correctional facilities, doors, doorways, and gates designed to be operated only by security personnel shall not be required to comply with Sections 11B-404.2.7, 11B-404.2.8, 11B-404.2.9, 11B-404.3.2 and 11B-404.3.4 through 11B-404.3.7.*

***11B*-404.2 Manual doors, doorways, and manual gates** Manual doors and doorways and manual gates intended for user passage shall comply with *Section 11B*-404.2.

***11B*-404.2.1 Revolving doors, gates, and turnstiles.** Revolving doors, revolving gates, and turnstiles shall not be part of an accessible route.

***11B*-404.2.2 Double-leaf doors and gates.** At least one of the active leaves of doorways with two leaves shall comply with *Sections 11B*-404.2.3 and *11B*-404.2.4.

***11B*-404.2.3 Clear width.** Door openings shall provide a clear width of 32 inches (*813* mm) minimum. Clear openings of doorways with swinging doors shall be measured between the face of the door and the stop, with the door open 90 degrees. Openings more than 24 inches (610 mm) deep shall provide a clear opening of 36 inches (*914* mm) minimum. There shall be no projections into the required clear opening width lower than 34 inches (*864* mm) above the finish floor or ground. Projections into the clear opening width between 34 inches (*864* mm) and 80 inches (*2032* mm) above the finish floor or ground shall not exceed 4 inches (*102* mm).

Exceptions:

1. In alterations, a projection of $^5/_8$ inch (*15.9* mm) maximum into the required clear width shall be permitted for the latch side stop.
2. Door closers and door stops shall be permitted to be 78 inches (*1981* mm) minimum above the finish floor or ground.

***11B*-404.2.4 Maneuvering clearances.** Minimum maneuvering clearances at doors and gates shall comply with *Section 11B*-404.2.4. Maneuvering clearances shall extend the full width of the doorway and the required latch side or hinge side clearance.

Exception: ***Reserved.***

***11B*-404.2.4.1 Swinging doors and gates.** Swinging doors and gates shall have maneuvering clearances complying with Table *11B*-404.2.4.1.

THE CITY OF LOS ANGELES OR ITS OFFICERS OR AGENTS SHALL NOT BE RESPONSIBLE FOR THE ACCURACY OR COMPLETENESS OF ELECTRONIC COPIES OF THIS PLAN SHEET.
FILE PATH: A360://Studio City Recreation Center/SCRC-Project Model_Central_Final.rvt
SHEET ISSUE DATE:01/01/14
REVISION DATES: (DESIGN STAGE ONLY)

CITY OF LOS ANGELES
DEPARTMENT OF PUBLIC WORKS
BUREAU OF ENGINEERING
ENGINEERING
CITY OF LOS ANGELES
NO. | REVISION DESCRIPTION | DATE | BY
BUILDING NO. –
INDEX NO. RP-300106
LICENSED ARCHITECT TED ALLEN C-23333 REGISTERED PROFESSIONAL ENGINEER STATE OF CALIFORNIA
CITY ENGINEER | DATE:
TED ALLEN, PE | 1-24-2019
ARCHITECTURAL DIVISION | LIC. NO.: C 23333 | 1-24-2019
ARCHITECT: ROBERT LOMELIN | 1-24-2019
DESIGNED BY: Z. AKHTER, M. CHAVARRIA, A. KIM, M. LAM
DRAWN BY: Z. AKHTER, M. CHAVARRIA, A. KIM | 1-24-2019
CHECKED BY: ROBERT LOMELIN | 1-24-2019
APPROVED BY: MAHMOOD KARIMZADEH, AIA, DEPUTY CITY ENGINEER | 1-24-2019
BUREAU OF ENGINEERING
OFFICIAL RECORD
CLIENT: DEPARTMENT OF RECREATION AND PARKS
GENERAL MANAGER: MICHAEL A. SHULL
SHEET TITLE: TITLE 24- DISABLED ACCESS REQUIREMENTS
PROJECT: STUDIO CITY RECREATION CENTER
ADDRESS: 12621 RYE STREET, STUDIO CITY, CA 91604
WORK ORDER NO. E170267B
PLAN FILE NO. 860
DRAWING NO. G105
SHEET 13 OF SHEETS 211
PLOTTED:7/1/2019 11:34:37 AM

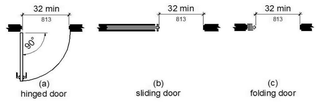

FIGURE *11B*-404.2.3
CLEAR WIDTH OF DOORWAYS

TABLE *11B*-404.2.4.1
MANEUVERING CLEARANCES AT MANUAL SWINGING DOORS AND GATES

TYPE OF USE		MINIMUM MANEUVERING CLEARANCE	
Approach direction	Door or gate side	Perpendicular to doorway	Parallel to doorway (beyond latch side unless noted)
From front	Pull	60 inches (*1524* mm)	18 inches (*457* mm)[5]
From front	Push	48 inches (*1219* mm)	0 inches (0 mm)[1]
From hinge side	Pull	60 inches (*1524* mm)	36 inches (*914* mm)
From hinge side	Push	*44 inches (1118 mm)*[3]	22 inches (559 mm)[3]
From latch side	Pull	*60 inches (1524 mm)*	24 inches (610 mm)
From latch side	Push	*44 inches (1118 mm)*[4]	24 inches (610 mm)

1. Add 12 inches (305 mm) if closer and latch are provided.
2. Add *4 inches (102 mm)* if closer and latch are provided.
3. Beyond hinge side.
4. Add *4 inches (102 mm)* if closer is provided.
5. *Add 6 inches (152 mm) at exterior side of exterior doors.*

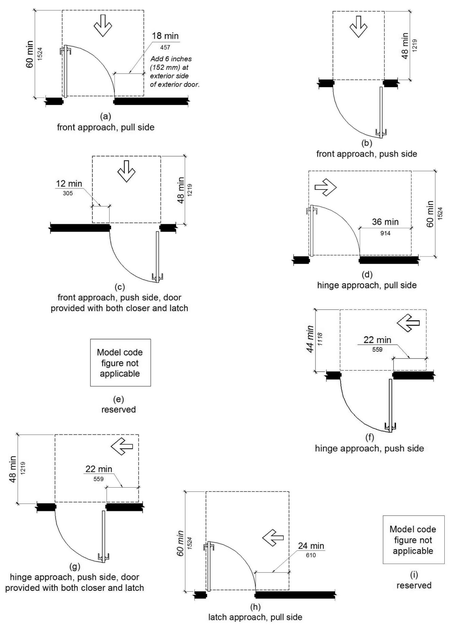

FIGURE *11B*-404.2.4.1
MANEUVERING CLEARANCES AT MANUAL SWINGING DOORS AND GATES

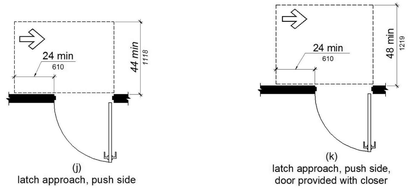

FIGURE *11B*-404.2.4.1—continued
MANEUVERING CLEARANCES AT MANUAL SWINGING DOORS AND GATES

***11B*-404.2.4.2 Doorways without doors or gates, sliding doors, and folding doors.** Doorways less than 36 inches (*914* mm) wide without doors or gates, sliding doors, or folding doors shall have maneuvering clearances complying with Table *11B*-404.2.4.2.

***11B*-404.2.4.3 Recessed doors and gates.** Maneuvering clearances for forward approach shall be provided when any obstruction within 18 inches (*457* mm) of the latch side at *an interior* doorway, *or within 24 inches (610 mm) of the latch side of an exterior doorway,* projects more than 8 inches (*203* mm) beyond the face of the door, measured perpendicular to the face of the door or gate.

***11B*-404.2.4.4 Floor or ground surface.** Floor or ground surface within required maneuvering clearances shall comply with *Section 11B*-302. Changes in level are not permitted.

Exceptions:

1. Slopes not steeper than 1:48 shall be permitted.
2. Changes in level at thresholds complying with *Section 11B*-404.2.5 shall be permitted.

***11B*-404.2.5 Thresholds.** Thresholds, if provided at doorways, shall be $^1/_2$ inch (12.7 mm) high maximum. Raised thresholds and changes in level at doorways shall comply with *Sections 11B*-302 and *11B*-303.

Exception: ***Reserved.***

***11B*-404.2.6 Doors in series and gates in series.** The distance between two hinged or pivoted doors in series and gates in series shall be 48 inches (*1219* mm) minimum plus the width of doors or gates swinging into the space.

***11B*-404.2.7 Door and gate hardware.** Handles, pulls, latches, locks, and other operable parts on doors and gates shall comply with *Section 11B*-309.4. Operable parts of such hardware shall be 34 inches (*864* mm) minimum and *44 inches (1118 mm)* maximum above the finish floor or ground. Where sliding doors are in the fully open position, operating hardware shall be exposed and usable from both sides.

Exceptions:

1. Existing locks shall be permitted in any location at existing glazed doors without stiles, existing overhead rolling doors or grilles, and similar existing doors or grilles that are designed with locks that are activated only at the top or bottom rail.
2. Access gates in barrier walls and fences protecting pools, spas, and hot tubs shall be permitted to have operable parts of the release of latch on self-latching devices at 54 inches (*1372* mm) maximum above the finish floor or ground provided the self-latching devices are not also self-locking devices and operated by means of a key, electronic opener, or integral combination lock.

***11B*-404.2.8 Closing speed.** Door and gate closing speed shall comply with *Section 11B*-404.2.8.

***11B*-404.2.8.1 Door closers and gate closers.** Door closers and gate closers shall be adjusted so that from an open position of 90 degrees, the time required to move the door to a position of 12 degrees from the latch is 5 seconds minimum.

***11B*-404.2.8.2 Spring hinges.** Door and gate spring hinges shall be adjusted so that from the open position of 70 degrees, the door or gate shall move to the closed position in 1.5 seconds minimum.

TABLE *11B*-404.2.4.2
MANEUVERING CLEARANCES AT DOORWAYS WITHOUT DOORS OR GATES, MANUAL SLIDING DOORS, AND MANUAL FOLDING DOORS

	MINIMUM MANEUVERING CLEARANCE	
Approach direction	Perpendicular to doorway	Parallel to doorway (beyond stop/latch side unless noted)
From front	48 inches (*1219* mm)	0 inches (0 mm)
From side[1]	42 inches (*1067* mm)	0 inches (0 mm)
From pocket/hinge side	42 inches (*1067* mm)	22 inches (*559* mm)[2]
From stop/latch side	42 inches (*1067* mm)	24 inches (610 mm)

1. Doorway with no door only.
2. Beyond pocket/hinge side.

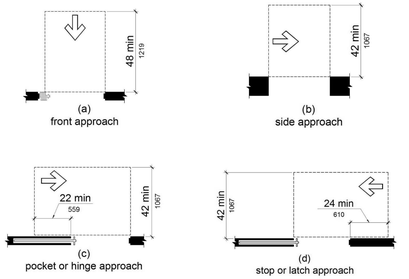

FIGURE *11B*-404.2.4.2
MANEUVERING CLEARANCES AT DOORWAYS WITHOUT DOORS, SLIDING DOORS, GATES, AND FOLDING DOORS

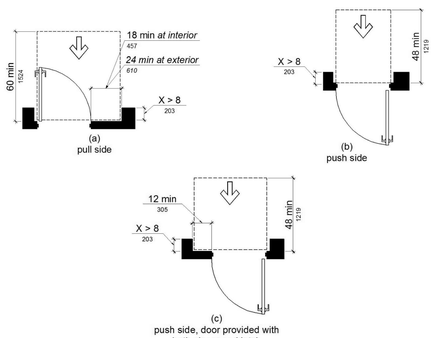

FIGURE *11B*-404.2.4.3
MANEUVERING CLEARANCES AT RECESSED DOORS AND GATES

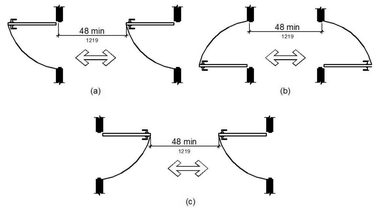

FIGURE *11B*-404.2.6
DOORS IN SERIES AND GATES IN SERIES

***11B*-404.2.9 Door and gate opening force.** The force for pushing or pulling open a door or gate shall be as follows:

1. Interior hinged doors and gates: 5 pounds (22.2 N) maximum.
2. Sliding or folding doors: 5 pounds (22.2 N) maximum.
3. *Required fire doors: the minimum opening force allowable by the appropriate administrative authority, not to exceed 15 pounds (66.7 N).*
4. *Exterior hinged doors: 5 pounds (22.2 N) maximum.*

These forces do not apply to the force required to retract latch bolts or disengage other devices that hold the door or gate in a closed position.

Exception: *When, at a single location, one of every eight exterior door leafs, or fraction of eight, is a powered door, other exterior doors at the same location, serving the same interior space, may have a maximum opening force of 8.5 pounds (37.8 N). The powered leaf(s) shall be located closest to the accessible route.*

a. Powered doors shall comply with Section 11B-404.3. Powered doors shall be fully automatic doors complying with Builders Hardware Manufacturers' Association (BHMA) A156.10 or low energy operated doors complying with BHMA A156.19.

b. Powered doors serving a building or facility with an occupancy of 150 or more shall be provided with a back-up battery or back-up generator. The back-up power source shall be able to cycle the door a minimum of 100 cycles.

c. Powered doors shall be controlled on both the interior and exterior sides of the doors by sensing devices, push plates, vertical actuation bars or other similar operating devices complying with Sections 11B-304, 11B-305 and 11B-308.

At each location where push plates are provided there shall be two push plates; the centerline of one push plate shall be 7 inches (178 mm) minimum and 8 inches (203 mm) maximum above the floor or ground surface and the centerline of the second push plate shall be 30 inches (762 mm) minimum and 44 inches (1118 mm) maximum above the floor or ground surface. Each push plate shall be a minimum of 4 inches (102 mm) diameter or a minimum of 4 inches by 4 inches (102 mm by 102 mm) square and shall display the International Symbol of Accessibility complying with Section 11B-703.7.

At each location where vertical actuation bars are provided the operable portion shall be located so the bottom is 5 inches (127 mm) maximum above the floor or ground surface and the top is 35 inches (889 mm) minimum above the floor or ground surface. The operable portion of each vertical actuation bar shall be a minimum of 2 inches (51 mm) wide and shall display the International Symbol of Accessibility complying with Section 11B-703.7.

Where push plates, vertical actuation bars or other similar operating devices are provided, they shall be placed in a conspicuous location. A level and clear floor or ground space for forward or parallel approach complying with Section *11B-305 shall be provided, centered on the operating device. Doors shall not swing into the required clear floor or ground space.*

d. Signs identifying the accessible entrance required by Section 11B-216.6 shall be placed on, or immediately adjacent to, each powered door. Signs shall be provided in compliance with BHMA A156.10 or BHMA A156.19, as applicable.

e. In addition to the requirements of Item d, where a powered door is provided in buildings or facilities containing assembly occupancies of 300 or more, a sign displaying the International Symbol of Accessibility measuring 6 inches by 6 inches (152 mm by 152 mm), complying with Section 11B-703.7, shall be provided above the door on both the interior and exterior sides of each powered door.

***11B*-404.2.10 Door and gate surfaces.** Swinging door and gate surfaces within 10 inches (*254* mm) of the finish floor or ground measured vertically shall have a smooth surface on the push side extending the full width of the door or gate. Parts creating horizontal or vertical joints in these surfaces shall be within $^1/_{16}$ inch (1.6 mm) of the same plane as the other *and be free of sharp or abrasive edges.* Cavities created by added kick plates shall be capped.

Exceptions:

1. Sliding doors shall not be required to comply with *Section 11B*-404.2.10.
2. Tempered glass doors without stiles and having a bottom rail or shoe with the top leading edge tapered at 60 degrees minimum from the horizontal shall not be required to meet the 10 inch (*254* mm) bottom smooth surface height requirement.
3. Doors and gates that do not extend to within 10 inches (*254* mm) of the finish floor or ground shall not be required to comply with *Section 11B*-404.2.10.
4. ***Reserved.***

***11B*-404.2.11 Vision lights.** Doors, gates, and side lights adjacent to doors or gates, containing one or more glazing panels that permit viewing through the panels shall have the bottom of at least one glazed panel located 43 inches (*1092* mm) maximum above the finish floor.

Exception: *Glazing panels* with the lowest part more than 66 inches (*1676* mm) from the finish floor or ground shall not be required to comply with *Section 11B*-404.2.11.

***11B*-404.3 Automatic and power-assisted doors and gates.** Automatic doors and automatic gates shall comply with *Section 11B*-404.3. Full-powered automatic doors shall comply with ANSI/BHMA A156.10. Low-energy and power-assisted doors shall comply with ANSI/BHMA A156.19.

***11B*-404.3.1 Clear width.** Doorways shall provide a clear opening of 32 inches (*813* mm) minimum in power-on and power-off mode. The minimum clear width for automatic door systems in a doorway *shall provide a clear, unobstructed opening of 32 inches (813 mm) with one leaf positioned at an angle of 90 degrees from its closed position.*

***11B*-404.3.2 Maneuvering clearance.** Clearances at power-assisted doors and gates shall comply with *Section 11B*-404.2.4. Clearances at automatic doors and gates without standby power and serving an accessible means of egress shall comply with *Section 11B*-404.2.4.

Exception: Where automatic doors and gates remain open in the power-off condition, compliance with *Section 11B*-404.2.4 shall not be required.

***11B*-404.3.3 Thresholds.** Thresholds and changes in level at doorways shall comply with *Section 11B*-404.2.5.

***11B*-404.3.4 Doors in series and gates in series.** Doors in series and gates in series shall comply with *Section 11B*-404.2.6.

***11B*-404.3.5 Controls.** Manually operated controls shall comply with *Section 11B*-309. The clear floor space adjacent to the control shall be located beyond the arc of the door swing.

***11B*-404.3.6 Break out opening.** Where doors and gates without standby power are a part of a means of egress, the clear break out opening at swinging or sliding doors and gates shall be 32 inches (*813* mm) minimum when operated in emergency mode.

Exception: Where manual swinging doors and gates comply with *Section 11B*-404.2 and serve the same means of egress compliance with *Section 11B*-404.3.6 shall not be required.

***11B*-404.3.7 Revolving doors, revolving gates, and turnstiles.** Revolving doors, revolving gates, and turnstiles shall not be part of an accessible route.

***11B*-405 Ramps**

***11B*-405.1 General.** Ramps on accessible routes shall comply with *Section 11B*-405.

Exception: In assembly areas, aisle ramps adjacent to seating and not serving elements required to be on an accessible route shall not be required to comply with *Section 11B*-405.

***11B*-405.2 Slope.** Ramp runs shall have a running slope not steeper than 1:12.

Exception: ***Reserved.***

***11B*-405.3 Cross slope.** Cross slope of ramp runs shall not be steeper than 1:48.

***11B*-405.4 Floor or ground surfaces.** Floor or ground surfaces of ramp runs shall comply with *Section 11B*-302. Changes in level other than the running slope and cross slope are not permitted on ramp runs.

***11B*-405.5 Clear width.** The clear width of a ramp run *shall be 48 inches (1219 mm)* minimum.

Exceptions:

1. Within employee work areas, the required clear width of ramps that are a part of common use circulation paths shall be permitted to be decreased by work area equipment provided that the decrease is essential to the function of the work being performed.
2. *Handrails may project into the required clear width of the ramp at each side 3$^1/_2$ inches (89 mm) maximum at the handrail height.*
3. *The clear width of ramps in residential uses serving an occupant load of fifty or less shall be 36 inches (914 mm) minimum between handrails.*

***11B*-405.6 Rise.** The rise for any ramp run shall be 30 inches (762 mm) maximum.

***11B*-405.7 Landings.** Ramps shall have landings at the top and the bottom of each ramp run. Landings shall comply with *Section 11B*-405.7.

***11B*-405.7.1 Slope.** Landings shall comply with *Section 11B*-302. Changes in level are not permitted.

Exception: Slopes not steeper than 1:48 shall be permitted.

***11B*-405.7.2 Width.** The landing clear width shall be at least as wide as the widest ramp run leading to the landing.

***11B*-405.7.2.1:** *Top landings shall be 60 inches (1524 mm) wide minimum.*

***11B*-405.7.3 Length.** The landing clear length shall be 60 inches (1524 mm) long minimum.

***11B*-405.7.3.1:** *Bottom landings shall extend 72 inches (1829 mm) minimum in the direction of ramp run.*

***11B*-405.7.4 Change in direction.** Ramps that change direction between runs at landings shall have a clear landing 60 inches (1525 mm) minimum by *72 inches (1829 mm)* minimum *in the direction of downward travel from the upper ramp run.*

***11B*-405.7.5 Doorways.** Where doorways are located adjacent to a ramp landing, maneuvering clearances required by *Sections 11B*-404.2.4 and *11B*-404.3.2 shall be permitted to overlap the required landing area. *Doors, when fully open, shall not reduce the required ramp landing width by more than 3 inches (76 mm). Doors, in any position, shall not reduce the minimum dimension of the ramp landing to less than 42 inches (1067 mm).*

***11B*-405.8 Handrails.** Ramp runs shall have handrails complying with *Section 11B*-505.

Exceptions:

1. ***Reserved.***
2. ***Reserved.***
3. *Curb ramps do not require handrails.*
4. *At door landings, handrails are not required on ramp runs less than 6 inches (152 mm) in rise or 72 inches (1829 mm) in length.*

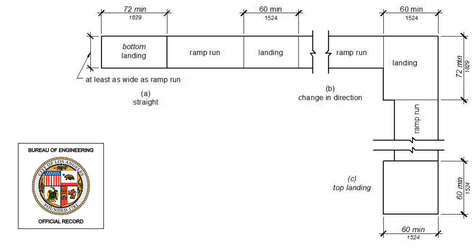

FIGURE *11B*-405.7
RAMP LANDINGS

***11B*-405.9 Edge protection.** Edge protection complying with *Section 11B*-405.9.2 shall be provided on each side of ramp runs and at each side of ramp landings.

Exceptions:

1. Edge protection shall not be required on ramps that are not required to have handrails and have sides complying with *Section 11B*-406.2.2.
2. Edge protection shall not be required on the sides of ramp landings serving an adjoining ramp run or stairway.
3. Edge protection shall not be required on the sides of ramp landings having a vertical drop-off of $^1/_2$ inch (12.7 mm) maximum within 10 inches (254 mm) horizontally of the minimum landing area specified in *Section 11B*-405.7.

11B*-405.9.1 *Reserved.

***11B*-405.9.2 Curb or barrier.** A curb, *2 inches (51 mm) high minimum*, or barrier shall be provided that prevents the passage of a 4 inch (*102* mm) diameter sphere, where any portion of the sphere is within 4 inches (*102* mm) of the finish floor or ground surface. *To prevent wheel entrapment, the curb or barrier shall provide a continuous and uninterrupted barrier along the length of the ramp.*

***11B*-405.10 Wet conditions.** Landings subject to wet conditions shall be designed to prevent the accumulation of water.

11B*-406 *Curb ramps, blended transitions and islands

***11B*-406.1 General.** *Curb ramps, blended transitions and islands on accessible routes shall comply with Section 11B-406. Curb ramps may be perpendicular, parallel, or a combination of perpendicular and parallel.*

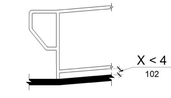

FIGURE *11B*-405.9.2
CURB OR BARRIER EDGE PROTECTION

***11B*-406.1.1 Perpendicular curb ramps.** *Perpendicular curb ramps shall comply with Section 11B-406.2.*

***11B*-406.1.2 Parallel curb ramps.** *Parallel curb ramps shall comply with Section 11B-406.3.*

***11B*-406.1.3 Blended transitions.** *Blended transitions shall comply with Section 11B-406.4.*

***11B*-406.1.4 Islands.** *Islands shall comply with Section 11B-406.6.*

***11B*-406.2 Perpendicular curb ramps.** *Perpendicular curb ramps shall comply with Sections 11B-406.2 and 11B-406.5.*

***11B*-406.2.1 Slope.** *Ramp runs shall have a running slope not steeper than 1:12.*

***11B*-406.2.2 Sides of curb ramps.** *Where provided, curb ramp flares shall not be steeper than 1:10.*

***11B*-406.3 Parallel curb ramps.** *Parallel curb ramps shall comply with Sections 11B-406.3 and 11B-406.5.*

THE CITY OF LOS ANGELES OR ITS OFFICERS OR AGENTS SHALL NOT BE RESPONSIBLE FOR THE ACCURACY OR COMPLETENESS OF ELECTRONIC COPIES OF THIS PLAN SHEET.
FILE PATH: A360://Studio City Recreation Center/SCRC-Project Model_Central_Final.rvt
SHEET ISSUE DATE:01/01/14
REVISION DATES: (DESIGN STAGE ONLY)
BUREAU OF ENGINEERING OFFICIAL RECORD
LICENSED ARCHITECT LOWELL M. JOSEPH C-23333 RENEWAL 08/31/2020 STATE OF CALIFORNIA

DEPARTMENT OF PUBLIC WORKS
BUREAU OF ENGINEERING
CITY OF LOS ANGELES
ENGINEERING

NO.	REVISION DESCRIPTION	DATE	BY

BUILDING NO. -
INDEX NO. RP-300106

CITY OF LOS ANGELES

		DATE:
CITY ENGINEER	TED ALLEN, PE	
ARCHITECTURAL DIVISION	LIC. NO.: C 23333	1-24-2019
ARCHITECT: ROBERT LOMELIN		1-24-2019
DESIGNED BY:	Z. AKHTER, M. CHAVARRIA, A. KIM, M. LAM	1-24-2019
DRAWN BY:	Z. AKHTER, M. CHAVARRIA, A KIM	1-24-2019
CHECKED BY:	ROBERT LOMELIN	1-24-2019
APPROVED BY:	MAHMOOD KARIMZADEH,AIA, DEPUTY CITY ENGINEER	1-24-2019

CLIENT: DEPARTMENT OF RECREATION AND PARKS
GENERAL MANAGER: MICHAEL A. SHULL

SHEET TITLE: TITLE 24- DISABLED ACCESS REQUIREMENTS

PROJECT: STUDIO CITY RECREATION CENTER

ADDRESS: 12621 RYE STREET, STUDIO CITY, CA 91604

WORK ORDER NO. E170267B
PLAN FILE NO. 860
DRAWING NO. G106
SHEET 14 OF SHEETS 211

PLOTTED:7/1/2019 11:34:43 AM

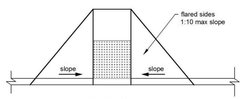

FIGURE *11B*-406.2.2
SIDES OF CURB RAMPS

***11B*-406.3.1 Slope.** The running slope of the curb ramp segments shall be in-line with the direction of sidewalk travel. Ramp runs shall have a running slope not steeper than 1:12.*

***11B*-406.3.2 Turning space.** A turning space 48 inches (1219 mm) minimum by 48 inches (1219 mm) minimum shall be provided at the bottom of the curb ramp. The slope of the turning space in all directions shall be 1:48 maximum.*

***11B*-406.4 Blended transitions.** Blended transitions shall comply with Sections 11B-406.4 and 11B-406.5.*

***11B*-406.4.1 Slope.** Blended transitions shall have a running slope not steeper than 1:20.*

***11B*-406.5 Common requirements.** Curb ramps and blended transitions shall comply with Section 11B-406.5.*

***11B*-406.5.1 Location.** Curb ramps and the flared sides of curb ramps shall be located so that they do not project into vehicular traffic lanes, parking spaces, or parking access aisles. Curb ramps at marked crossings shall be wholly contained within the markings, excluding any flared sides.*

***Exception:** Diagonal curb ramps shall comply with Section 11B-406.5.9.*

***11B*-406.5.2 Width.** The clear width of curb ramp runs (excluding any flared sides), blended transitions, and turning spaces shall be 48 inches (1219 mm) minimum.*

***11B*-406.5.3 Landings.** Landings shall be provided at the tops of curb ramps and blended transitions. The landing clear length shall be 48 inches (1219 mm) minimum. The landing clear width shall be at least as wide as the curb ramp, excluding any flared sides, or the blended transition leading to the landing. The slope of the landing in all directions shall be 1:48 maximum.*

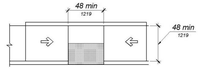

FIGURE *11B*-406.3.2
PARALLEL CURB RAMPS

***Exception:** Parallel curb ramps shall not be required to comply with Section 11B-406.5.3.*

***11B*-406.5.4 Floor or ground surfaces.** Floor or ground surfaces of curb ramps and blended transitions shall comply with Section 11B-405.4.*

***11B*-406.5.5 Wet conditions.** Curb ramps and blended transitions shall comply with Section 11B-405.10.*

***11B*-406.5.6 Grade breaks.** Grade breaks at the top and bottom of curb ramp runs shall be perpendicular to the direction of the ramp run. Grade breaks shall not be permitted on the surface of ramp runs and turning spaces. Surface slopes that meet at grade breaks shall be flush.*

***11B*-406.5.7 Cross slope.** The cross slope of curb ramps and blended transitions shall be 1:48 maximum.*

***11B*-406.5.8 Counter slope.** Counter slopes of adjoining gutters and road surfaces immediately adjacent to and within 24 inches (610 mm) of the curb ramp shall not be steeper than 1:20. The adjacent surfaces at transitions at curb ramps to walks, gutters, and streets shall be at the same level.*

***11B*-406.5.9 Clear space at diagonal curb ramps.** The bottom of diagonal curb ramps shall have a clear space 48 inches (1219 mm) minimum outside active traffic lanes of the roadway. Diagonal curb ramps provided at marked crossings shall provide the 48 inches (1219 mm) minimum clear space within the markings.*

***11B*-406.5.10 Diagonal curb ramps.** Diagonal or corner type curb ramps with returned curbs or other well-defined edges shall have the edges parallel to the direction of pedestrian flow. Diagonal curb ramps with flared sides shall have a segment of curb 24 inches (610 mm) long minimum located on each side of the curb ramp and within the marked crossing.*

***11B*-406.5.11 Reserved.**

***11B*-406.5.12 Detectable warnings.** Curb ramps and blended transitions shall have detectable warnings complying with Section 11B-705.*

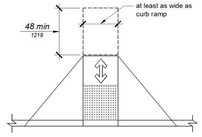

FIGURE *11B*-406.5.3
LANDINGS AT THE TOP OF CURB RAMPS

FIGURE *11B*-406.5.8
COUNTER SLOPE OF SURFACES ADJACENT TO CURB RAMPS

***11B*-406.6 Islands.** Raised islands in crossings shall be cut through level with the street or have curb ramps at both sides. The clear width of the accessible route at islands shall be 60 inches (1524 mm) wide minimum. Where curb ramps are provided, they shall comply with Section 11B-406. Landings complying with Section 11B-406.5.3 and the accessible route shall be permitted to overlap. Islands shall have detectable warnings complying with Section 11B-705.*

***11B*-407 Elevators**

***11B*-407.1 General.** Elevators shall comply with *Section 11B*-407 and with ASME A17.1 They shall be passenger elevators as classified by ASME A17.1. Elevator operation shall be automatic.

***11B*-407.1.1 Combined passenger and freight elevators.** When the only elevators provided for use by the public and employees are combination passenger and freight elevators, they shall comply with Section 11B-407 and with ASME A17.1.*

***11B*-407.2 Elevator landing requirements.** Elevator landings shall comply with *Section 11B*-407.2.

***11B*-407.2.1 Call controls.** Where elevator call buttons or keypads are provided, they shall comply with *Sections 11B*-407.2.1 and *11B*-309.4.

Exception: *Reserved.*

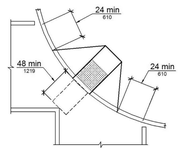

FIGURE *11B*-406.5.10
DIAGONAL OR CORNER TYPE CURB RAMPS

***11B*-407.2.1.1 Height.** Call buttons and keypads shall be located within one of the reach ranges specified in *Section 11B*-308, measured to the centerline of the highest operable part.

Exception: *Reserved.*

***11B*-407.2.1.2 Size *and shape*.** Call buttons shall *have square shoulders*, be $^3/_4$ inch (*19.1* mm) minimum in the smallest dimension *and shall be raised $^1/_8$ inch (3.2 mm) plus or minus $^1/_{32}$ inch (0.8 mm) above the surrounding surface. The buttons shall be activated by a mechanical motion that is detectable.*

Exception: *Reserved.*

***11B*-407.2.1.3 Clear floor or ground space.** A clear floor or ground space complying with *Section 11B*-305 shall be provided at call controls.

***11B*-407.2.1.4 Location.** The call button that designates the up direction shall be located above the call button that designates the down direction.

Exception: *Reserved.*

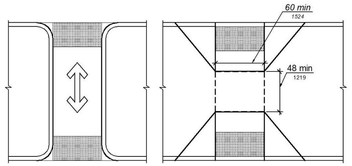

(a)
cut through at island

(b)
curb ramp at island

FIGURE *11B*-406.6
ISLANDS IN CROSSINGS

***11B*-407.2.1.5 Signals.** Call buttons shall have visible signals *that will activate* when each call is registered and *will extinguish* when each call is answered. *Call buttons shall be internally illuminated with a white light over the entire surface of the button.*

Exceptions:

1. *Reserved.*
2. *Reserved.*

***11B*-407.2.1.6 Keypads.** Where keypads are provided, keypads shall be in a standard telephone keypad arrangement and shall comply with *Section 11B*-407.4.7.2.

***11B*-407.2.2 Hall signals.** Hall signals, including in-car signals, shall comply with *Section 11B*-407.2.2.

***11B*-407.2.2.1 Visible and audible signals.** A visible and audible signal shall be provided at each hoistway entrance to indicate which car is answering a call and the car's direction of travel. Where in-car signals are provided, they shall be visible from the floor area adjacent to the hall call buttons.

Exceptions:

1. *Reserved.*
2. *Reserved.*

***11B*-407.2.2.2 Visible signals.** Visible signal fixtures shall be centered at 72 inches (*1829* mm) minimum above the finish floor or ground. The visible signal elements shall be a minimum $2^1/_2$ inches (64 mm) *high by $2^1/_2$ inches (64 mm) wide*. Signals shall be visible from the floor area adjacent to the hall call button.

Exceptions:

1. *Reserved.*
2. *Reserved.*

***11B*-407.2.2.3 Audible signals**. Audible signals shall sound once for the up direction and twice for the down direction, or shall have verbal annunciators that indicate the direction of elevator car travel. Audible signals shall have a frequency of 1500 Hz maximum. Verbal annunciators shall have a frequency of 300 Hz minimum and 3000 Hz maximum. The audible signal and verbal annunciator shall be 10 dB minimum above ambient, but shall not exceed 80 dB, measured at the hall call button.

Exceptions:

1. *Reserved*
2. *Reserved.*

11B*-407.2.2.4 *Reserved

***11B*-407.2.3 Hoistway signs.** Signs at elevator hoistways shall comply with *Section 11B*-407.2.3.

***11B*-407.2.3.1 Floor designation.** Floor designations complying with *Sections 11B*-703.2 and *11B*-703.4.1 shall be provided on both jambs of elevator hoistway entrances. Floor designations shall be provided in both

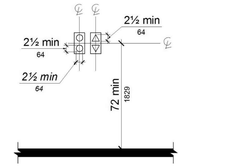

FIGURE *11B*-407.2.2.2
VISIBLE HALL SIGNALS

raised characters and Braille. *Raised* characters shall be 2 inches (51 mm) high. A *raised* star, *placed to the left of the floor designation*, shall be provided on both jambs at the main entry level. *The outside diameter of the star shall be 2 inches (51 mm) and all points shall be of equal length. Raised characters, including the star, shall be white on a black background. Braille complying with Section 11B-703.3 shall be placed below the corresponding raised characters and the star. The Braille translation for the star shall be "MAIN". Applied plates are acceptable if they are permanently fixed to the jamb.*

11B*-407.2.3.2 *Reserved

***11B*-407.3 Elevator door requirements.** Hoistway and car doors shall comply with *Section 11B*-407.3.

***11B*-407.3.1 Type.** Elevator doors shall be the horizontal sliding type. Car gates shall be prohibited.

***11B*-407.3.2 Operation.** Elevator hoistway and car doors shall open and close automatically.

Exception: Existing manually operated hoistway swing doors shall be permitted provided that they comply with *Sections 11B*-404.2.3 and *11B*-404.2.9. Car door closing shall not be initiated until the hoistway door is closed.

***11B*-407.3.3 Reopening device.** Elevator doors shall be provided with a reopening device complying with *Section 11B*-407.3.3 that shall stop and reopen a car door and hoistway door automatically if the door becomes obstructed by an object or person.

Exception: Existing elevators with manually operated doors shall not be required to comply with *Section 11B*-407.3.3.

***11B*-407.3.3.1 Height.** The device shall be activated by sensing an obstruction passing through the opening at 5 inches (*127* mm) nominal and 29 inches (*737* mm) nominal above the finish floor.

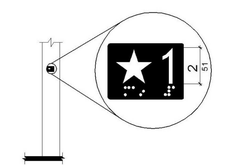

FIGURE *11B*-407.2.3.1
FLOOR DESIGNATIONS ON JAMBS
OF ELEVATOR HOISTWAY ENTRANCES

***11B*-407.3.3.2 Contact.** The device shall not require physical contact to be activated, although contact is permitted to occur before the door reverses.

***11B*-407.3.3.3 Duration.** Door reopening devices shall remain effective for 20 seconds minimum.

***11B*-407.3.4 Door and signal timing.** The minimum acceptable time from notification that a car is answering a call until the doors of that car start to close shall be calculated from the following equation:

$T = D/(1.5 \text{ ft/s})$ or $T = D/(457 \text{ mm/s}) = 5$ seconds minimum where T equals the total time in seconds and D equals the distance (in feet or millimeters) from the point in the lobby or corridor 60 inches (*1524* mm) directly in front of the farthest hall call button controlling that car to the centerline of its hoistway door.

Exceptions:

1. For cars with in-car lanterns, T shall be permitted to begin when the signal is visible from the point 60 inches (*1524* mm) directly in front of the farthest hall call button and the audible signal is sounded.
2. *Reserved.*

TABLE *11B*-407.4.1
ELEVATOR CAR DIMENSIONS

	MINIMUM DIMENSIONS			
Door location	**Door clear width**	**Inside car, side to side**	**Inside car, back wall to front return**	**Inside car, back wall to inside face of door**
Centered	42 inches (*1067* mm)	80 inches (*2032* mm)	51 inches (1295 mm)	54 inches (*1372* mm)
Side (off-centered)	36 inches (*914* mm)[1]	68 inches (*1727* mm)	51 inches (1295 mm)	54 inches (*1372* mm)
Any	36 inches (*914* mm)[1]	54 inches (*1372* mm)	80 inches (*2032* mm)	80 inches (*2032* mm)
Any	36 inches (*914* mm)[1]	60 inches (*1524* mm)[2]	60 inches (*1524* mm)[2]	60 inches (*1524* mm)[2]

1. A tolerance of minus $^3/_4$ inch (15.9 mm) is permitted.
2. Other car configurations that provide a turning space complying with *Section 11B*-304 with the door closed shall be permitted.

***11B*-407.3.5 Door delay.** Elevator doors shall remain fully open in response to a car call for *5* seconds minimum.

***11B*-407.3.6 Width.** The width of elevator doors shall comply with Table *11B*-407.4.1.

Exception: In existing elevators, a power-operated car door complying with *Section 11B*-404.2.3 shall be permitted.

***11B*-407.4 Elevator car requirements.** Elevator cars shall comply with *Section 11B*-407.4.

***11B*-407.4.1 Car dimensions.** Inside dimensions of elevator cars and clear width of elevator doors shall comply with Table *11B*-407.4.1.

Exception: *In existing buildings, where existing shaft configuration prohibits strict compliance with Section 11B-407.4.1, existing* elevator car configurations that provide a clear floor area of *18 square feet (1.67 m^2)* minimum and also provide an inside clear depth 54 inches (*1372* mm) minimum and a clear width *48 inches (1219 mm)* minimum shall be permitted.

***11B*-407.4.2 Floor surfaces.** Floor surfaces in elevator cars shall comply with *Sections 11B*-302 and *11B*-303.

***11B*-407.4.3 Platform to hoistway clearance.** The clearance between the car platform sill and the edge of any hoistway landing shall be $1^1/_4$ inch (32 mm) maximum.

***11B*-407.4.4 Leveling.** Each car shall be equipped with a self-leveling feature that will automatically bring and maintain the car at floor landings within a tolerance of ½ inch (*12.7* mm) under rated loading to zero loading conditions.

***11B*-407.4.5 Illumination.** The level of illumination at the car controls, platform, car threshold and car landing sill shall be 5 foot candles (54 lux) minimum.

***11B*-407.4.6 Elevator car controls.** Where provided, elevator car controls shall comply with *Sections 11B*-407.4.6 and *11B*-309.4.

Exception: In existing elevators, where a new car operating panel complying with *Section 11B*-407.4.6 is provided, existing car operating panels *may remain operational and* shall not be required to comply with *Section 11B*-407.4.6.

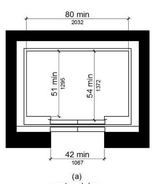

(a)
centered door

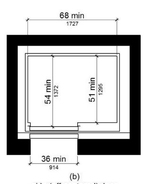

(b)
side (off-centered) door

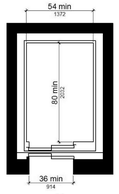

(c)
any door location

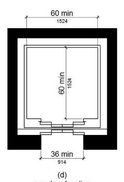

(d)
any door location

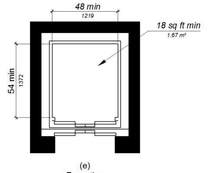

(e)
Exception
existing elevator car configuration

FIGURE *11B*-407.4.1
ELEVATOR CAR DIMENSIONS

***11B*-407.4.6.1 Location.** Controls shall be located within one of the reach ranges specified in *Section 11B*-308.

Exceptions:

1. Where the elevator panel serves more than 16 openings and a parallel approach is provided, buttons with floor designations shall be permitted to be 54 inches (*1372* mm) maximum above the finish floor.
2. In existing elevators, car control buttons with floor designations shall be permitted to be located 54 inches (*1372* mm) maximum above the finish floor where a parallel approach is provided.

***11B*-407.4.6.2 Buttons.** Car control buttons with floor designations shall comply with *Section 11B*-407.4.6.2.

Exception: *Reserved.*

***11B*-407.4.6.2.1 Size *and shape*.** Buttons shall *have square shoulders*, be $^3/_4$ inch (*19.1* mm) minimum in their smallest dimension *and be raised $^1/_8$ inch (3.2 mm) plus or minus $^1/_{32}$ inch (0.8 mm) above the surrounding surface.*

***11B*-407.4.6.2.2 Arrangement.** Buttons shall be arranged with numbers in ascending order. When two or more columns of buttons are provided they shall read from left to right.

***11B*-407.4.6.2.3 Illumination.** *Car control buttons shall be illuminated.*

***11B*-407.4.6.2.4 Operation.** *Car control buttons shall be activated by a mechanical motion that is detectable.*

***11B*-407.4.6.3 Keypads.** Car control keypads shall be in a standard telephone keypad arrangement and shall comply with *Section 11B*-407.4.7.2.

***11B*-407.4.6.4 Emergency controls.** Emergency controls shall comply with *Section 11B*-407.4.6.4.

***11B*-407.4.6.4.1 Height.** Emergency control buttons shall have their centerlines 35 inches (*889* mm) minimum above the finish floor.

***11B*-407.4.6.4.2 Location.** Emergency controls, including the emergency alarm, shall be grouped at the bottom of the panel.

***11B*-407.4.7 Designations and indicators of car controls.** Designations and indicators of car controls shall comply with *Section 11B*-407.4.7.

Exception: In existing elevators, where a new car operating panel complying with *Section 11B*-407.4.7 is provided, existing car operating panels *may remain operational and* shall not be required to comply with *Section 11B*-407.4.7.

***11B*-407.4.7.1 Buttons.** Car control buttons shall comply with *Section 11B*-407.4.7.1.

***11B*-407.4.7.1.1 Type.** Control buttons shall be identified by *raised characters or symbols, white on a black background, complying with Section 11B-703.2 and Braille complying with Section 11B-703.3.*

***11B*-407.4.7.1.2 Location.** Raised *characters or symbols* and Braille designations shall be placed immediately to the left of the control button to which the designations apply.

Exception: *Reserved.*

***11B*-407.4.7.1.3 Symbols.** The control button for the emergency stop, alarm, door open, door close, main entry floor, and phone, shall be identified with *raised* symbols *and Braille* as shown in Table *11B*-407.4.7.1.3.

***11B*-407.4.7.1.4 Visible indicators.** Buttons with floor designations shall be provided with visible indicators to show that a call has been registered.

TABLE *11B*-407.4.7.1.3
ELEVATOR CONTROL BUTTON IDENTIFICATION

Control Button	Raised Symbol	Braille Message
Emergency Stop	⊗	"ST"OP" Three Cells
Alarm	🔔	AL"AR"M Four Cells
Door Open	◖◗	OP"EN" Three Cells
Door Close	▶◀	CLOSE Five Cells
Main Entry Floor	★	MA"IN" Three Cells
Phone	📞	PH"ONE" Four Cells

The visible indication shall extinguish when the car arrives at the designated floor.

***11B*-407.4.7.1.5 Button spacing.** *A minimum clear space of $^3/_4$ inch (9.5 mm) or other suitable means of separation shall be provided between rows of control buttons.*

***11B*-407.4.7.2 Keypads.** Keypads shall be identified by characters complying with *Section 11B*-703.5 and shall be centered on the corresponding keypad button. The number five key shall have a single raised dot. The dot shall be 0.118 inch (3 mm) to 0.120 inch (3.05 mm) base diameter and in other aspects comply with Table *11B*-703.3.1.

***11B*-407.4.8 Car position indicators.** Audible and visible car position indicators shall be provided in elevator cars.

***11B*-407.4.8.1 Visible indicators.** Visible indicators shall comply with *Section 11B*-407.4.8.1.

***11B*-407.4.8.1.1 Size.** Characters shall be $^1/_2$ inch (*12.7* mm) high minimum.

***11B*-407.4.8.1.2 Location.** Indicators shall be located above the car control panel or above the door.

***11B*-407.4.8.1.3 Floor arrival.** As the car passes a floor and when a car stops at a floor served by the elevator, the corresponding character shall illuminate.

Exception: *Reserved.*

11B*-407.4.8.1.4 *Reserved.

***11B*-407.4.8.2 Audible indicators.** Audible indicators shall comply with *Section 11B*-407.4.8.2.

***11B*-407.4.8.2.1 Signal type.** The signal shall be an automatic verbal annunciator which announces the floor at which the car is about to stop.

Exception: For elevators that have a rated speed of 200 feet per minute (1 m/s) or less, a non-verbal audible signal with a frequency of 1500 Hz maximum which sounds as the car passes or is about to stop at a floor served by the elevator shall be permitted.

***11B*-407.4.8.2.2 Signal level.** The verbal annunciator shall be 10 dB minimum above ambient, but shall not exceed 80 dB, measured at the annunciator.

***11B*-407.4.8.2.3 Frequency.** The verbal annunciator shall have a frequency of 300 Hz minimum to 3000 Hz maximum.

***11B*-407.4.9 Emergency communication.** Emergency two-way communication systems shall comply with *Section 11B*-308. *Raised* symbols *or* characters, *white on a black background, and Braille* shall be provided adjacent to the device and shall comply with *Sections 11B*-703.2 *and 11B-703.3. Emergency two-way communication systems between the elevator and a point outside the hoistway shall comply with ASME A17.1.*

***11B*-407.4.10 Support rail.** *Support rails shall be provided on at least one wall of the car.*

***11B*-407.4.10.1 Location.** *Clearance between support rails and adjacent surfaces shall be $1^1/_2$ inches (38 mm) minimum. Top of support rails shall be 31 inches (787 mm) minimum to 33 inches (838 mm) maximum above the floor of the car. The ends of the support rail shall be 6 inches (152 mm) maximum from adjacent walls.*

***11B*-407.4.10.2 Surfaces.** *Support rails shall be smooth and any surface adjacent to them shall be free of sharp or abrasive elements.*

***11B*-407.4.10.3 Structural strength.** *Allowable stresses shall not be exceeded for materials used when a vertical or horizontal force of 250 pounds (111.2 N) is applied at any point on the support rail, fastener, mounting device, or supporting structure.*

***11B*-408 Limited-use/limited-application elevators**

***11B*-408.1 General.** Limited-use/limited-application elevators shall comply with *Section 11B*-408 and with ASME A17.1. They shall be passenger elevators as classified by ASME A17.1. Elevator operation shall be automatic.

***11B*-408.2 Elevator landings.** Landings serving limited-use/limited-application elevators shall comply with *Section 11B*-408.2.

***11B*-408.2.1 Call buttons.** Elevator call buttons and keypads shall comply with *Section 11B*-407.2.1.

***11B*-408.2.2 Hall signals.** Hall signals shall comply with *Section 11B*-407.2.2.

***11B*-408.2.3 Hoistway signs.** Signs at elevator hoistways shall comply with *Section 11B*-407.2.3.1.

***11B*-408.3 Elevator doors.** Elevator hoistway doors shall comply with *Section 11B*-408.3.

***11B*-408.3.1 Sliding doors.** Sliding hoistway and car doors shall comply with *Sections 11B*-407.3.1 through *11B*-407.3.3 and *11B*-408.4.1.

***11B*-408.3.2 Swinging doors.** Swinging hoistway doors shall open and close automatically and shall comply with *Sections 11B*-404, *11B*-407.3.2 and *11B*-408.3.2.

***11B*-408.3.2.1 Power operation.** Swinging doors shall be power-operated and shall comply with ANSI/BHMA A156.19.

***11B*-408.3.2.2 Duration.** Power-operated swinging doors shall remain open for 20 seconds minimum when activated.

***11B*-408.4 Elevator cars.** Elevator cars shall comply with *Section 11B*-408.4.

***11B*-408.4.1 Car dimensions and doors.** Elevator cars shall provide a clear width 42 inches (*1067* mm) minimum and a clear depth 54 inches (*1372* mm) minimum. Car doors shall be positioned at the narrow ends of cars and shall provide 32 inches (*813* mm) minimum clear width.

Exceptions:

1. Cars that provide a clear width 51 inches (1295 mm) minimum shall be permitted to provide a clear depth 51 inches (1295 mm) minimum provided that car doors provide a clear opening 36 inches (*914* mm) wide minimum.
2. *Reserved.*

***11B*-408.4.2 Floor surfaces.** Floor surfaces in elevator cars shall comply with *Sections 11B*-302 and *11B*-303.

***11B*-408.4.3 Platform to hoistway clearance.** The platform to hoistway clearance shall comply with *Section 11B*-407.4.3.

***11B*-408.4.4 Leveling.** Elevator car leveling shall comply with *Section 11B*-407.4.4.

***11B*-408.4.5 Illumination.** Elevator car illumination shall comply with *Section 11B*-407.4.5.

***11B*-408.4.6 Car controls.** Elevator car controls shall comply with *Section 11B*-407.4.6. Control panels shall be centered on a side wall.

***11B*-408.4.7 Designations and indicators of car controls.** Designations and indicators of car controls shall comply with *Section 11B*-407.4.7.

***11B*-408.4.8 Emergency communications.** Car emergency signaling devices complying with *Section 11B*-407.4.9 shall be provided.

***11B*-409 Private residence elevators**

***11B*-409.1 General.** Private residence elevators that are provided within a residential dwelling unit required to provide mobility features complying with *Sections 11B*-809.2 through *11B*-809.4 shall comply with *Section 11B*-409 and with ASME A17.1. They shall be passenger elevators as classified by ASME A17.1. Elevator operation shall be automatic.

***11B*-409.2 Call buttons.** Call buttons shall be $^3/_4$ inch (*19.1* mm) minimum in the smallest dimension and shall comply with *Section 11B*-309.

***11B*-409.3 Elevator doors.** Hoistway doors, car doors, and car gates shall comply with *Sections 11B*-409.3 and *11B*-404.

Exception: Doors shall not be required to comply with the maneuvering clearance requirements in *Section 11B*-404.2.4.1 for approaches to the push side of swinging doors.

***11B*-409.3.1 Power operation.** Elevator car and hoistway doors and gates shall be power operated and shall comply with ANSI/BHMA A156.19. Power operated doors and gates shall remain open for 20 seconds minimum when activated.

Exception: In elevator cars with more than one opening, hoistway doors and gates shall be permitted to be of the manual-open, self-close type.

***11B*-409.3.2 Location.** Elevator car doors or gates shall be positioned at the narrow end of the clear floor spaces required by *Section 11B*-409.4.1.

***11B*-409.4 Elevator cars.** Private residence elevator cars shall comply with *Section 11B*-409.4.

***11B*-409.4.1 Inside dimensions of elevator cars.** Elevator cars shall provide a clear floor space of 36 inches (*914* mm) minimum by 48 inches (*1219* mm) minimum and shall comply with *Section 11B*-305.

***11B*-409.4.2 Floor surfaces.** Floor surfaces in elevator cars shall comply with *Sections 11B*-302 and *11B*-303.

***11B*-409.4.3 Platform to hoistway clearance.** The clearance between the car platform and the edge of any landing sill shall be $1^1/_4$ inch (38 mm) maximum.

***11B*-409.4.4 Leveling.** Each car shall automatically stop at a floor landing within a tolerance of $^1/_2$ inch (*12.7* mm) under rated loading to zero loading conditions.

***11B*-409.4.5 Illumination levels.** Elevator car illumination shall comply with *Section 11B*-407.4.5.

***11B*-409.4.6 Car controls.** Elevator car control buttons shall comply with *Sections 11B*-409.4.6, *11B*-309.3, *11B*-309.4, and shall be raised or flush.

***11B*-409.4.6.1 Size.** Control buttons shall be $^3/_4$ inch (*19.1* mm) minimum in their smallest dimension.

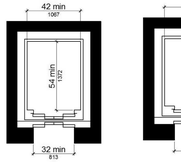

(a)
new construction

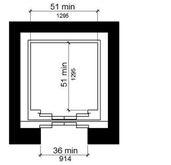

(b)
Exception 1

Model code figure not applicable

(c)
reserved

FIGURE *11B*-408.4.1
LIMITED-USE/LIMITED-APPLICATION (LULA) ELEVATOR CAR DIMENSIONS

THE CITY OF LOS ANGELES OR ITS OFFICERS OR AGENTS SHALL NOT BE RESPONSIBLE FOR THE ACCURACY OR COMPLETENESS OF ELECTRONIC COPIES OF THIS PLAN SHEET.
FILE PATH: A360://Studio City Recreation Center/SCRC-Project Model_Central_Final.rvt
SHEET ISSUE DATE: 01/01/14
REVISION DATES: (DESIGN STAGE ONLY)

CITY OF LOS ANGELES PUBLIC WORKS
DEPARTMENT OF ENGINEERING
BUREAU OF ENGINEERING
CITY OF LOS ANGELES
NO. | REVISION DESCRIPTION | DATE | BY
BUILDING NO. -
INDEX NO. RP-300106
CITY ENGINEER: TED ALLEN, PE
ARCHITECTURAL DIVISION LIC. NO.: C 23333
ARCHITECT: ROBERT LOMELIN
DESIGNED BY: Z. AKHTER, M. CHAVARRIA, A. KIM, M. LAM
DRAWN BY: Z. AKHTER, M. CHAVARRIA, A KIM
CHECKED BY: ROBERT LOMELIN
APPROVED BY: MAHMOOD KARIMZADEH, AIA, DEPUTY CITY ENGINEER
DATE: 1-24-2019
CLIENT: DEPARTMENT OF RECREATION AND PARKS
GENERAL MANAGER: MICHAEL A. SHULL
SHEET TITLE: TITLE 24- DISABLED ACCESS REQUIREMENTS
PROJECT: STUDIO CITY RECREATION CENTER
ADDRESS: 12621 RYE STREET, STUDIO CITY, CA 91604
LICENSED ARCHITECT ROBERT LOMELIN No. C 23333 REGISTERED STATE OF CALIFORNIA
BUREAU OF ENGINEERING OFFICIAL RECORD
WORK ORDER NO. E170267B
PLAN FILE NO. 860
DRAWING NO. G107
SHEET 15 OF SHEETS 211
PLOTTED:7/1/2019 11:34:48 AM

***11B*-409.4.6.2 Location.** Control panels shall be on a side wall, 12 inches (305 mm) minimum from any adjacent wall.

***11B*-409.4.7 Emergency communications.** Emergency two-way communication systems shall comply with *Section 11B-409.4.7*.

***11B*-409.4.7.1 Type.** A telephone and emergency signal device shall be provided in the car.

***11B*-409.4.7.2 Operable parts.** The telephone and emergency signaling device shall comply with *Sections 11B*-309.3 and *11B*-309.4.

***11B*-409.4.7.3 Compartment.** If the telephone or device is in a closed compartment, the compartment door hardware shall comply with *Section 11B*-309.

***11B*-409.4.7.4 Cord.** The telephone cord shall be 29 inches (*737* mm) long minimum.

***11B*-410 Platform lifts**

***11B*-410.1 General.** Platform lifts shall comply with ASME A18.1. Platform lifts shall not be attendant-operated and shall provide unassisted entry and exit from the lift.

***11B*-410.2 Floor surfaces.** Floor surfaces in platform lifts shall comply with *Sections 11B*-302 and *11B*-303.

***11B*-410.3 Clear floor space.** Clear floor space in platform lifts shall comply with *Section 11B*-305.

***11B*-410.4 Platform to runway clearance.** The clearance between the platform sill and the edge of any runway landing shall be $1^1/_4$ inch (32 mm) maximum.

***11B*-410.5 Operable parts.** Controls for platform lifts shall comply with *Section 11B*-309.

***11B*-410.6 Doors and gates.** Platform lifts shall have low-energy power-operated doors or gates complying with *Section 11B*-404.3. Doors shall remain open for 20 seconds minimum. End doors and gates shall provide a clear width 32 inches (*813* mm) minimum. Side doors and gates shall provide a clear width 42 inches (*1067* mm) minimum.

Exception: Platform lifts serving two landings maximum and having doors or gates on opposite sides shall be permitted to have self-closing manual doors or gates.

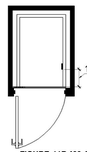

FIGURE *11B*-409.4.6.2
LOCATION OF PRIVATE RESIDENCE ELEVATOR CONTROL PANEL

***11B*-410.7 Landing size.** The minimum size of landings at platform lifts shall be 60 inches by 60 inches (1524 mm by 1524 mm).

***11B*-410.8 Restriction sign.** A sign complying with Section 11B-703.5 shall be posted in a conspicuous place at each landing and within the platform enclosure stating "No Freight" and include the International Symbol of Accessibility complying with Section 11B-703.7.2.1.

***11B*-411 Destination-oriented elevators.**

***11B*-411.1 General.** Destination-oriented elevators shall comply with Section 11B-411 and with ASME A17.1. They shall be passenger elevators as classified by ASME A17.1. Elevator operation shall be automatic.

***11B*-411.1.1 Floor designations.** In facilities served by destination-oriented elevator systems, floor designations shall be numeric characters only. Floor designations shall be "one" (1) or "zero" (0) at the main entry level and shall increase by one for each successive higher story or level. The initial floor below the main entry level shall be designated "minus one" (-1) and the designation for each successive lower story or level shall decrease by one. Stories or levels shall not be designated by alphabetic characters.

Exceptions:

1. *In existing facilities where new elevators are installed or existing elevators are altered into a destination-oriented elevator system, levels within stories, such as mezzanines located above or below the main entry level shall be permitted to be designated with an alpha-numeric character such as "M2", indicating "mezzanine" and the "story number", respectively, in which it is located, provided there is no duplication with alpha-numeric designations of elevator cars in the facility.*
2. *Non-successive floor numbering shall be permitted where a specific floor number is omitted or where a floor is frequented only by service personnel for maintenance, repair or occasional monitoring of equipment.*

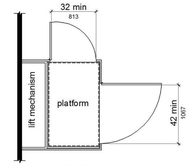

FIGURE *11B*-410.6
PLATFORM LIFT DOORS AND GATES

hoistway immediately below the floor designation. Signs shall be provided in both raised characters and Braille. Raised characters shall be 2 inches (51 mm) high. Raised characters shall be white on a black background. Braille complying with Section 11B-703.3 shall be placed below the corresponding raised characters. Applied plates are acceptable if they are permanently fixed to the jamb.

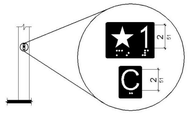

FIGURE 11B-411.2.3
FLOOR DESIGNATION AND CAR DESIGNATION SIGNS ON JAMBS OF DESTINATION-ORIENTED ELEVATOR HOISTWAY ENTRANCES

***11B*-411.3 Elevator door requirements.** Hoistway and car doors shall comply with Section 11B-411.3.

***11B*-411.3.1 Type.** Elevator door type shall comply with Section 11B-407.3.1.

***11B*-411.3.2 Operation.** Elevator hoistway and car doors shall open and close automatically.

***11B*-411.3.3 Reopening device.** Elevator doors shall be provided with a reopening device complying with Section *11B-411.3.3* that shall stop and reopen a car door and hoistway door automatically if the door becomes obstructed by an object or person.

***11B*-411.3.3.1 Height.** The height of the reopening device shall comply with Section 11B-407.3.3.1.

***11B*-411.3.3.2 Contact.** The device contact shall comply with Section 11B-407.3.3.2.

***11B*-411.3.3.3 Duration.** The door reopening device duration shall comply with Section *11B-407.3.3.3*.

***11B*-411.3.4 Door delay.** Door delay shall comply with Section 11B-407.3.5.

***11B*-411.3.5 Width.** The width of elevator doors shall comply with Table 11B-407.4.1.

***11B*-411.4 Elevator car requirements.** Elevator cars shall comply with Section 11B-411.4.

***11B*-411.4.1 Car dimensions.** Inside dimensions of elevator cars and clear width of elevator doors shall comply with Section 11B-407.4.1.

***11B*-411.4.2 Floor surfaces.** Floor surfaces in elevator cars shall comply with Section 11B-407.4.2.

***11B*-411.4.3 Platform to hoistway clearance.** Platform to hoistway clearance shall comply with Section 11B-407.4.3.

***11B*-411.4.4 Leveling.** Elevator car leveling shall comply with Section 11B-407.4.4.

***11B*-411.4.5 Illumination.** The level of illumination at the car controls shall comply with Section 11B-407.4.5.

***11B*-411.4.6 Elevator car controls.** Where provided, elevator car controls shall comply with Sections 11B-411.4.6 and 11B-309.4.

***11B*-411.4.6.1 Location.** Controls shall be located within one of the reach ranges specified in Section 11B-308.

***11B*-411.4.6.2 Buttons.** Car control buttons shall comply with Sections 11B-407.4.6.2.1 and 11B-407.4.6.2.4. The car shall not have non-functional, exposed floor buttons.

***11B*-411.4.6.3 Emergency controls.** Emergency controls shall comply with Section 11B-407.4.6.4.

***11B*-411.4.7 Designations and indicators of car control buttons.** Designations and indicators of car control buttons shall comply with Section *11B-411.4.7*.

***11B*-411.4.7.1 Type.** Control button type shall comply with Section 11B-407.4.7.1.1.

***11B*-411.4.7.2 Location.** Raised characters or symbols and Braille designations shall comply with Section 11B-407.4.7.1.2.

***11B*-411.4.7.3 Symbols.** The control button for the emergency stop, alarm, door open, door close, and phone, shall be identified with raised symbols and Braille as shown in Table 11B-407.4.7.1.3.

***11B*-411.4.7.4 Button spacing.** Button spacing shall comply with Section 11B-407.4.7.1.5.

***11B*-411.4.8 Car position indicators.** Audible and visible car position indicators shall be provided in elevator cars.

***11B*-411.4.8.1 Visible indicators.** Visible indicators shall comply with Section 11B-411.4.8.1.

***11B*-411.4.8.1.1 Size.** Characters shall comply with Section 11B-407.4.8.1.1.

***11B*-411.4.8.1.2 Location.** Location of indicators shall comply with Section 11B-407.4.8.1.2.

***11B*-411.4.8.2 Audible indicators.** Audible indicators shall comply with Section 11B-411.4.8.2.

***11B*-411.4.8.2.1 Signal type.** The signal shall be an automatic verbal annunciator which announces the floor at which the car is about to stop.

***11B*-411.4.8.2.2 Signal level.** The verbal annunciator signal level shall comply with Section 11B-407.4.8.2.2.

***11B*-411.4.8.2.3 Frequency.** The verbal annunciator frequency shall comply with Section 11B-407.4.8.2.3.

***11B*-411.1.2 Car designations.** Elevator cars shall be designated with a single alphabetic character. For elevators programmed to the same hall call console or group of hall call consoles, each elevator car shall be designated with a different single alphabetic character.

Exception: *Elevator systems with more than 26 elevators shall be permitted to use alpha-numeric designations such as "A1".*

***11B*-411.2 Elevator landing requirements.** Elevator landings shall comply with Section *11B-411.2*.

***11B*-411.2.1 Hall call consoles.** Hall call consoles shall comply with Sections 11B-411.2.1 and 11B-309.

***11B*-411.2.1.1 Location.** Hall call consoles shall be wall-mounted. On floors with a building entry, including parking and transfer levels, each hoistway entrance shall be adjacent to a hall call console. On other floors, a minimum of one hoistway entrance shall be adjacent to a hall call console.

Exception: *Hall call consoles beyond those required by Section 11B-411.2.1.1 shall be permitted to be provided outside the elevator landing and to be wall-mounted, pedestal-mounted, or mounted on a kiosk or security turnstile.*

***11B*-411.2.1.2 Required features.** Hall call consoles shall include a touch screen or keypad with display screen, an accessibility function button, and audio output loudspeaker.

***11B*-411.2.1.2.1 Keypads.** Keypads shall be in a 12-key ascending telephone keypad layout. Characters and symbols shall be centered on the corresponding button. The number five key shall have a single raised dot. The dot shall have a base diameter of 0.118 inch (3 mm) minimum and 0.120 inch (3.05 mm) maximum and a height of 0.025 inch (0.6 mm) minimum and 0.037 inch (0.9 mm) maximum. Keypads shall have a star (*) on the lower left button and a minus sign (-) on the lower right button. From any level above and below the main egress level, when the star button is pressed an elevator shall be dispatched to the main egress level.

***11B*-411.2.1.2.2 Touch screen.** Touch screen display shall comply with Section 11B-411.2.1.2.4.

***11B*-411.2.1.2.3 Accessibility function button.** The accessibility function button shall be identified by the International Symbol of Accessibility and a raised indication. The International Symbol of Accessibility shall comply with Section 11B-703.7.2.1, and shall be $^5/_8$ inch (15.9 mm) minimum in height. The indication shall be three raised dots. Each dot shall have a base diameter of 0.059 inch (1.5 mm) minimum and 0.063 inch (1.6 mm) maximum and a height of 0.025 inch (0.6 mm) minimum and 0.037 inch (0.9 mm) maximum. The dots shall be spaced $^1/_4$ inch (6.4 mm), measured center to center, in the form of an equilateral triangle with a vertex pointing up. The accessibility function button shall not be provided with a key repeat function.

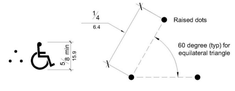

FIGURE 11B-411.2.1.2.3
DESTINATION-ORIENTED ELEVATOR ACCESSIBILITY FUNCTION BUTTON INDICATION

***11B*-411.2.1.2.4 Display screen.** Upon activation of the accessibility function button, the display screen shall display information including but not limited to, operating instructions, user input confirmation, elevator assignment characters, direction to the assigned elevator, and error messages. The display screen shall comply with Section 11B-411.2.1.2.4.

***11B*-411.2.1.2.4.1 Contrast.** Display screens shall provide contrast with light characters and symbols on a dark background or dark characters and symbols on a light background. The background shall be solid and static.

***11B*-411.2.1.2.4.2 Size.** Elevator assignment characters shall be 1 inch high (25 mm) minimum.

***11B*-411.2.1.2.4.3 Duration.** Elevator assignment characters shall be displayed for a minimum of 5 seconds.

***11B*-411.2.1.2.5 Audio output.** Upon activation of the accessibility function button, the audio output shall provide verbal announcements, including but not limited to, operating instructions, user input confirmation, announcement of the elevator assignment characters, direction to the assigned elevator, and error messages. Audio output shall be recorded or digitized human speech, and shall be delivered through a loudspeaker. Auditory volume shall be at least 10 dB above ambient sound level, but shall not exceed 80 dB, measured 36 inches (914 mm) in front of the console. At hall call console locations where the ambient sound level varies, auditory volume shall be maintained at the required volume by an automatic gain control or shall be set at not less than 75 dB.

***11B*-411.2.1.3 Arrangement.** Hall call console arrangement of required features shall comply with Section 11B-411.2.1.3.

***11B*-411.1.9 Emergency communication.** Emergency communication shall comply with Section 11B-407.4.9.

***11B*-411.4.10 Support rail.** Support rails complying with Section 11B-407.4.10 shall be provided on at least one wall of the car.

***11B*-411.4.11 Floor destination indicators.** There shall be on each elevator car door jamb a visual display indicating floor destinations.

***11B*-411.4.11.1 Height.** Floor destination characters shall be 1 inch (25 mm) high minimum complying with Section 11B-703.5.3.

***11B*-411.4.11.2 Contrast.** Visual display shall provide contrast with light characters on a dark background or dark characters on a light background. The background shall be solid and static.

***11B*-411.4.11.3 Duration.** Floor destination characters shall be displayed upon elevator car arrival at the input floor and shall not extinguish until the elevator car arrives at the destination floor.

***11B*-411.2.1.3.1 Keypad call console arrangement.** Where keypad call consoles are provided, the display screen shall be located directly above the keypad. The accessibility function button shall be located directly below the keypad at a height of 36 inches (914 mm) to 42 inches (1067 mm) above the finish floor.

***11B*-411.2.1.3.2 Touch screen call console arrangement.** Where touch screen call consoles are provided, the touch screen shall be located directly above the accessibility function button. The accessibility function button shall be located at a height of 36 inches (914 mm) to 42 inches (1067 mm) above the finish floor.

***11B*-411.2.1.3.3 Proximity of required elements.** Required features shall be provided on a hall call console assembly or as individual elements grouped in close proximity.

***11B*-411.2.1.3.4 Position.** Display screens and touch screens shall be positioned so glare is reduced on the screen. Keypads or buttons shall slope away from the user at 15 to 25 degrees from the vertical plane. Touch screens shall be sloped away from the user at 7 to 25 degrees from the vertical plane.

***11B*-411.2.1.4 Additional features.** Hall call console additional features, if provided, shall comply with Sections 11B-309 and 11B-411.2.1.4.

***11B*-411.2.1.4.1 Hall call console additional buttons.** Hall call console buttons provided in addition to the accessibility function button and keypad buttons shall comply with Section 11B-411.2.1.4.1. Buttons in addition to the accessibility function button are not permitted on hall call consoles using a touch screen.

***11B*-411.2.1.4.1.1 Arrangement.** Buttons shall be arranged in columns to the right of the keypad with a minimum horizontal spacing of 1.5 times the horizontal spacing between the numeric keys and with the same vertical spacing as the numeric keys.

***11B*-411.2.1.4.1.2 Identification.** Buttons shall be identified by raised characters and symbols, white on a black background, complying with Section 11B-703.2 and Braille complying with Section 11B-703.3. Identification shall be placed immediately to the left of the control button to which the designation applies.

***11B*-411.2.1.4.2 Security or access controls.** Security or access control system card readers associated with elevator operation shall be in close proximity to each hall call console in a consistent manner throughout the facility.

***11B*-411.2.1.5 Button requirements.** Keypad buttons, the accessibility function button, and additional hall call console buttons shall comply with Section 11B-411.2.1.5.

***11B*-411.2.1.5.1 Size.** Buttons shall have square shoulders, be $^3/_4$ inch (19.1 mm) minimum in the smallest dimension and shall be raised $^1/_8$ inch (3.2 mm) plus or minus $^1/_{32}$ inch (0.8 mm) above the surrounding surface. The buttons shall be activated by a mechanical motion that is detectable.

***11B*-411.2.1.5.2 Color.** Characters and symbols on buttons, where provided, shall be white on a black background.

***11B*-411.2.1.6 Identification of floors served.** In buildings with two or more elevator banks, each serving a different group of specific floors, hall call consoles located on floors with a building entry, including parking and transfer levels, shall be provided with signs complying with Sections 11B-703.2, 11B-703.3, and 11B-703.5 on the surface of or above the hall call console stating "FLOORS n1 – n2." where n1 - n2 represents the range of floors served. Characters shall be white on a black background. When the accessibility function button is pressed, the audio output shall provide a verbal announcement of the floors served by the elevator group.

***11B*-411.2.1.7 Elevator car assignment.** When the accessibility function button is pressed, elevator car assignment shall comply with Section 11B-411.2.1.7.

***11B*-411.2.1.7.1 Assignment by keypad hall call console.** The audio output shall provide verbal instruction for the user to enter a destination floor. The selected destination floor shall be confirmed by verbal announcement and on the display screen. Verbal and visible indication of an invalid input shall be provided. The display screen shall indicate the elevator assignment characters and a verbal announcement shall be made of the assigned elevator responding to the call. Visual and verbal direction to the assigned elevator shall be provided.

***11B*-411.2.1.7.2 Assignment by touch screen hall call console.** The audio output shall provide verbal instruction for the user to press the accessibility function button as a response to verbal direction in order to select the destination floor. The selected destination floor shall be confirmed by verbal announcement and on the display screen. Verbal and visible indication of an invalid input shall be provided. The display screen shall indicate the elevator assignment characters and a verbal announcement shall be made of the assigned elevator responding to the call. Visual and verbal direction to the assigned elevator shall be provided.

Exception. *In addition to assignment by Section 11B-411.2.1.7.2, a verbal announcement providing the user with an option to select an alternative mode of operation shall be permitted. Alternative operation shall be by one of the following options:*

1. *Virtual keypad. The size of the keypad shall be a nominal 4 inches (102 mm) wide by 5 inches (127 mm) high in a 12-key ascending telephone keypad layout centered in the console. Characters and symbols shall be centered on the corresponding button. Keypads shall have a star (*) on the lower left button and a minus sign (-) on the lower right button. Operation shall be by contact with the touch screen with a press on the key. The audio output shall provide user input confirmation after each key is pressed. Keys shall not be provided with a key repeat function. From any level above and below the main egress level, when the star button is pressed an elevator shall be dispatched to the main egress level.*
2. *Gesture-based mode of operation. Operation shall be by contact with the touch screen, without specific contact with an icon, and using established non-proprietary gestures for selection and input, including but not limited to tapping, sliding, and tap-hold contact-release to select. The audio output shall provide verbal direction on use of the touch screen, and indication of floor selection options until assignment to the elevator is given.*

***11B*-411.2.1.7.3 Assignment by security credential.** If a security system or other form of access control system is provided, the audio output shall provide a verbal announcement and direction to the location of the access control activation sensor, such as "present security credential at the sensor immediately to the left". Upon presentation of security credential, the destination floor shall be confirmed by verbal announcement and on the display screen. The display screen shall indicate the elevator assignment characters and a verbal announcement shall be made of the assigned elevator responding to the call. Visual and verbal direction to the assigned elevator shall be provided.

***11B*-411.2.1.7.4 Adjacency assignment.** The system shall assign an elevator car immediately to the left or right of the hall call console.

Exception: *The most adjacent elevator serving the selected floor shall be assigned by hall call consoles located outside the elevator landing.*

***11B*-411.2.2 Elevator car identification at elevator landings.** Elevator car identification shall comply with Section 11B-411.2.2.

***11B*-411.2.2.1 Visible identification.** Above or adjacent to each elevator car entrance there shall be a visible identification fixture with a car designation character. The identification fixture shall be 80 inches (2032 mm) minimum above the finish floor or ground to the bottom of the fixture. The characters on the fixture shall be upper case with a height of 4 inches (102 mm) minimum complying with Sections 11B-703.5.1, 11B-703.5.3, 11B-703.5.4, 11B-703.5.7, and 11B-703.5.8.

Exception: *Existing buildings shall be permitted to have a visible identification fixture with a car designation character adjacent to each elevator car entrance centered at 72 inches (1829 mm) above the finish floor or ground. The character on the fixture shall be upper case with a height of $2^1/_2$ inches (64 mm) minimum complying with Sections 11B-703.5.1, 11B-703.5.3, 11B-703.5.4, 11B-703.5.7, and 11B-703.5.8.*

***11B*-411.2.2.2 Verbal identification.** When the accessibility function button is pressed, verbal announcement of the car designation shall be provided at the elevator car entrance upon arrival. Audio output shall be recorded or digitized human speech, and shall be delivered through a loudspeaker. The verbal annunciator shall have a frequency of 300 Hz minimum and 3000 Hz maximum. Auditory volume shall be at least 10 dB above ambient sound level, but shall not exceed 80 dB, measured 36 inches (914 mm) in front of the elevator entrance and at 48 inches (1219 mm) above the floor. At elevator entrances where the ambient sound level varies, auditory volume shall be maintained at the required volume by an automatic gain control or shall be set at not less than 75 dB.

***11B*-411.2.3 Signs on jambs of elevator hoistway entrances.** Signs on jambs of elevator hoistway entrances shall comply with Section 11B-411.2.3.

***11B*-411.2.3.1 Floor designation signs.** Floor designation signs complying with Sections 11B-703.2 and 11B-703.4.1 shall be provided on both jambs of elevator hoistway entrances. Signs shall be provided in both raised characters and Braille. Raised characters shall be 2 inches (51 mm) high. A raised star placed to the left of the floor designation, shall be provided on both jambs at the main entry level. The outside diameter of the star shall be 2 inches (51 mm) and all points shall be of equal length. Raised characters, including the star, shall be white on a black background. Braille complying with Section 11B-703.3 shall be placed below the corresponding raised characters and the star. The Braille translation for the star shall be "MAIN". Applied plates are acceptable if they are permanently fixed to the jamb.

***11B*-411.2.3.2 Car designation signs.** Car designation signs complying with Sections 11B-703.2 and 11B-703.4.1 shall be provided on both jambs of the

DIVISION 5:
GENERAL SITE AND BUILDING ELEMENTS

***11B*-501 General**

***11B*-501.1 Scope.** The provisions of *Division* 5 shall apply where required by *Division* 2 or where referenced by a requirement in this *chapter*.

***11B*-502 Parking spaces**

***11B*-502.1 General.** Car and van parking spaces shall comply with *Section 11B*-502. Where parking spaces are marked with lines, width measurements of parking spaces and access aisles shall be made from the centerline of the markings.

Exception: Where parking spaces or access aisles are not adjacent to another parking space or access aisle, measurements shall be permitted to include the full width of the line defining the parking space or access aisle.

***11B*-502.2 Vehicle spaces.** *Car and van parking spaces shall be 216 inches (5486 mm) long minimum.* Car parking spaces shall be *108 inches (2743 mm)* wide minimum and van parking spaces shall be *144 inches (3658 mm)* wide minimum, shall be marked to define the width, and shall have an adjacent access aisle complying with *Section 11B*-502.3.

Exception: Van parking spaces shall be permitted to be *108 inches (2743 mm)* wide minimum where the access aisle is 96 inches (*2438* mm) wide minimum.

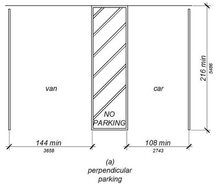

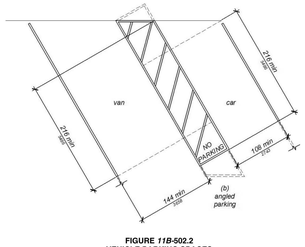

FIGURE *11B*-502.2
VEHICLE PARKING SPACES

***11B*-502.3 Access aisle.** Access aisles serving parking spaces shall comply with *Section 11B*-502.3. Access aisles shall adjoin an accessible route. Two parking spaces shall be permitted to share a common access aisle.

***11B*-502.3.1 Width.** Access aisles serving car and van parking spaces shall be 60 inches (*1524* mm) wide minimum.

***11B*-502.3.2 Length.** Access aisles shall extend the full *required* length of the parking spaces they serve.

***11B*-502.3.3 Marking.** Access aisles shall be marked *with a blue painted borderline around their perimeter. The area within the blue borderlines shall be marked with hatched lines a maximum of 36 inches (914 mm) on center in a color contrasting with that of the aisle surface, preferably blue or white. The words "NO PARKING" shall be painted on the surface within each access aisle in white letters a minimum of 12 inches (305 mm) in height and located to be visible from the adjacent vehicular way. Access aisle markings may extend beyond the minimum required length.*

***11B*-502.3.4 Location.** Access aisles shall not overlap the vehicular way. Access aisles shall be permitted to be placed on either side of the parking space except for van parking spaces which shall have access aisles located on the passenger side of the parking spaces.

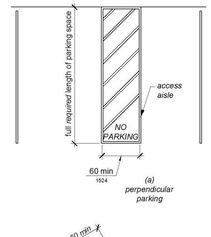

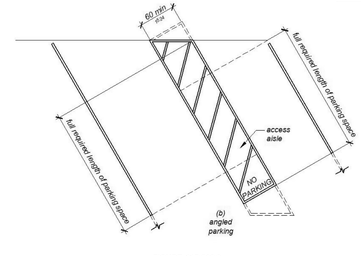

FIGURE *11B*-502.3
PARKING SPACE ACCESS AISLE

THE CITY OF LOS ANGELES OR ITS OFFICERS OR AGENTS SHALL NOT BE RESPONSIBLE FOR THE ACCURACY OR COMPLETENESS OF ELECTRONIC COPIES OF THIS PLAN SHEET.
FILE PATH: A360://Studio City Recreation Center/SCRC-Project Model_Central_Final.rvt
SHEET ISSUE DATE: 01/01/14
REVISION DATES: (DESIGN STAGE ONLY)

CITY OF LOS ANGELES
DEPARTMENT OF PUBLIC WORKS
BUREAU OF ENGINEERING
CITY OF LOS ANGELES
ENGINEERING
NO. | REVISION DESCRIPTION | DATE | BY
BUILDING NO. -
INDEX NO. RP-300106
LICENSED ARCHITECT ROBERT LOMELIN No. C 23333 Renewal 08/31/2021 STATE OF CALIFORNIA
CITY ENGINEER | DATE:
ARCHITECTURAL DIVISION | 1-24-2019
TED ALLEN, PE | 1-24-2019
LIC. NO.: C 23333 | 1-24-2019
ARCHITECT: ROBERT LOMELIN | 1-24-2019
DESIGNED BY: Z. AKHTER, M. CHAVARRIA, A. KIM, M. LAM
DRAWN BY: Z. AKHTER, M. CHAVARRIA, A. KIM
CHECKED BY: ROBERT LOMELIN | 1-24-2019
APPROVED BY: MAHMOOD KARIMZADEH, AIA, DEPUTY CITY ENGINEER | 1-24-2019
CLIENT: DEPARTMENT OF RECREATION AND PARKS
GENERAL MANAGER: MICHAEL A. SHULL
SHEET TITLE: TITLE 24- DISABLED ACCESS REQUIREMENTS
PROJECT: STUDIO CITY RECREATION CENTER
ADDRESS: 12621 RYE STREET, STUDIO CITY, CA 91604
BUREAU OF ENGINEERING
OFFICIAL RECORD
WORK ORDER NO. E170267B
PLAN FILE NO. 860
DRAWING NO. G108
SHEET 16 OF SHEETS 211
PLOTTED:7/1/2019 11:34:53 AM

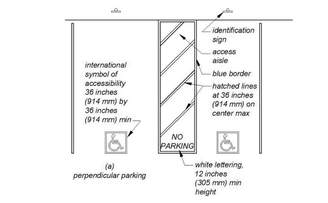

FIGURE *11B*-502.3.3
ANGLED AND PERPENDICULAR PARKING IDENTIFICATION

***11B*-502.4 Floor or ground surfaces.** Parking spaces and access aisles serving them shall comply with *Section 11B*-302. Access aisles shall be at the same level as the parking spaces they serve. Changes in level are not permitted.

Exception: Slopes not steeper than 1:48 shall be permitted.

***11B*-502.5 Vertical clearance.** Parking *spaces*, access aisles and vehicular routes serving them shall provide a vertical clearance of 98 inches (2489 mm) minimum.

***11B*-502.6 Identification.** Parking space identification signs shall include the International Symbol of Accessibility complying with *Section 11B*-703.7.2.1 *in white on a blue background.* Signs identifying van parking spaces shall contain *additional language or an additional sign with* the designation "van accessible". Signs shall be 60 inches (*1524* mm) minimum above the finish floor or ground surface measured to the bottom of the sign.

Exception: *Signs located within a circulation path shall be a minimum of 80 inches (2032 mm) above the finish floor or ground surface measured to the bottom of the sign.*

***11B*-502.6.1 Finish and size.** *Parking identification signs shall be reflectorized with a minimum area of 70 square inches (45,161 mm²).*

***11B*-502.6.2 Minimum fine.** *Additional language or an additional sign below the International Symbol of Accessibility shall state "Minimum Fine $250".*

***11B*-502.6.3 Location.** *A parking space identification sign shall be visible from each parking space. Signs shall be permanently posted either immediately adjacent to the parking space or within the projected parking space width at the head end of the parking space. Signs may also be permanently posted on a wall at the interior end of the parking space.*

***11B*-502.6.4 Marking.** *Each accessible car and van space shall have surface identification complying with either Section 11B-502.6.4.1 or 11B-502.6.4.2.*

***11B*-502.6.4.1** *The parking space shall be marked with an International Symbol of Accessibility complying with Section 11B-703.7.2.1 in white on a blue background a minimum 36 inches wide by 36 inches high (914 mm by 914 mm). The centerline of the International Symbol of Accessibility shall be a maximum of 6 inches (152 mm) from the centerline of the parking space, its sides parallel to the length of the parking space and its lower corner at, or lower side aligned with, the end of the parking space length.*

***11B*-502.6.4.2** *The parking space shall be outlined in blue or painted blue and shall be marked with an International Symbol of Accessibility complying with Section 11B-703.7.2.1 a minimum 36 inches wide by 36 inches high (914 mm by 914 mm) in white or a suitable contrasting color. The centerline of the International Symbol of Accessibility shall be a maximum of 6 inches (152 mm) from the centerline of the parking space, its sides parallel to the length of the parking space and its lower corner at, or lower side aligned with, the end of the parking space.*

***11B*-502.7 Relationship to accessible routes.** Parking spaces and access aisles shall be designed so that cars and vans, when parked, cannot obstruct the required clear width of adjacent accessible routes.

***11B*-502.7.1 Arrangement.** *Parking spaces and access aisles shall be designed so that persons using them are not required to travel behind parking spaces other than to pass behind the parking space in which they parked.*

***11B*-502.7.2 Wheel stops.** *A curb or wheel stop shall be provided if required to prevent encroachment of vehicles over the required clear width of adjacent accessible routes.*

***11B*-502.8 Additional signs.** *An additional sign shall be posted either; 1) in a conspicuous place at each entrance to an off-street parking facility or 2) immediately adjacent to on-site accessible parking and visible from each parking space.*

***11B*-502.8.1 Size.** *The additional sign shall not be less than 17 inches (432 mm) wide by 22 inches (559 mm) high.*

***11B*-502.8.2 Lettering.** *The additional sign shall clearly state in letters with a minimum height of 1 inch (25 mm) the following:*

"Unauthorized" vehicles parked in designated accessible spaces not displaying distinguishing placards or special license plates issued for persons with disabilities will be towed away at the owner's expense. Towed vehicles may be reclaimed at: _____ or by telephoning _____."

Blank spaces shall be filled in with appropriate information as a permanent part of the sign.

***11B*-503 Passenger *drop-off and* loading zones**

***11B*-503.1 General.** Passenger *drop-off and* loading zones shall comply with *Section 11B*-503.

***11B*-503.2 Vehicle pull-up space.** Passenger *drop-off and* loading zones shall provide a vehicular pull-up space 96 inches (2438 mm) wide minimum and 20 feet (6096 mm) long minimum.

***11B*-503.3 Access aisle.** Passenger *drop-off and* loading zones shall provide access aisles complying with *Section 11B*-503 adjacent *and parallel* to the vehicle pull-up space. Access aisles shall adjoin an accessible route and shall not overlap the vehicular way.

***11B*-503.3.1 Width.** Access aisles serving vehicle pull-up spaces shall be 60 inches (*1524* mm) wide minimum.

***11B*-503.3.2 Length.** Access aisles shall extend the full length of the vehicle pull-up spaces they serve.

***11B*-503.3.3 Marking.** Access aisles shall be marked *with a painted borderline around their perimeter. The area within the borderlines shall be marked with hatched lines a maximum of 36 inches (914 mm) on center in a color contrasting with that of the aisle surface.*

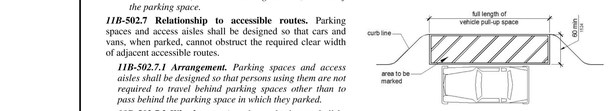

FIGURE *11B*-503.3
PASSENGER *DROP-OFF AND* LOADING ZONE ACCESS AISLE

***11B*-503.4 Floor and ground surfaces.** Vehicle pull-up spaces and access aisles serving them shall comply with *Section 11B*-302. Access aisles shall be at the same level as the vehicle pull-up space they serve. Changes in level are not permitted.

Exception: Slopes not steeper than 1:48 shall be permitted.

***11B*-503.5 Vertical clearance.** Vehicle pull-up spaces, access aisles serving them, and a vehicular route from an entrance to the passenger loading zone and from the passenger loading zone to a vehicular exit shall provide a vertical clearance of 114 inches (2896 mm) minimum.

***11B*-504 Stairways**

***11B*-504.1 General.** Stairs shall comply with *Section 11B*-504.

***11B*-504.2 Treads and risers.** All steps on a flight of stairs shall have uniform riser heights and uniform tread depths. Risers shall be 4 inches (*102* mm) high minimum and 7 inches (*178* mm) high maximum. Treads shall be 11 inches (*279* mm) deep minimum.

Exception: *Curved stairways with winder treads are permitted at stairs which are not part of a required means of egress.*

***11B*-504.3 Open risers.** Open risers are not permitted.

Exceptions:

1. *On exterior stairways, an opening of not more than $^1/_2$ inch (12.7 mm) may be permitted between the base of the riser and the tread.*
2. *On exterior stairways, risers constructed of grating containing openings of not more than $^1/_2$ inch (12.7 mm) may be permitted.*

***11B*-504.4 Tread surface.** Stair treads shall comply with *Section 11B*-302. Changes in level are not permitted.

Exception: Treads shall be permitted to have a slope not steeper than 1:48.

***11B*-504.4.1 Contrasting stripe.** *Interior stairs shall have the upper approach and lower tread marked by a stripe providing clear visual contrast. Exterior stairs shall have the upper approach and all treads marked by a stripe providing clear visual contrast.*

The stripe shall be a minimum of 2 inches (51 mm) wide to a maximum of 4 inches (102 mm) wide placed parallel to, and not more than 1 inch (25 mm) from, the nose of the step or upper approach. The stripe shall extend the full width of the step or upper approach and shall be of material that is at least as slip resistant as the other treads of the stair. A painted stripe shall be acceptable. Grooves shall not be used to satisfy this requirement.

***11B*-504.5 Nosings.** The radius of curvature at the leading edge of the tread shall be $^1/_2$ inch (*12.7* mm) maximum. Nosings that project beyond risers shall have the underside of the leading edge curved or beveled. Risers shall be permitted to slope under the tread at an angle of 30 degrees maximum from vertical. The permitted projection of the nosing shall extend *$1^1/_4$ inches (32 mm)* maximum over the tread below.

Exception: *In existing buildings there is no requirement to retroactively alter existing nosing projections of $1^1/_2$ inches (38 mm) which were constructed in compliance with the building code in effect at the time of original construction.*

***11B*-504.6 Handrails.** Stairs shall have handrails complying with *Section 11B*-505.

***11B*-504.7 Wet conditions.** Stair treads and landings subject to wet conditions shall be designed to prevent the accumulation of water.

***11B*-504.8 Floor identification.** *Floor identification signs required by Chapter 10, Section 1023.9 complying with Sections 11B-703.1, 11B-703.2, 11B-703.3 and 11B-703.5 shall be located at the landing of each floor level, placed adjacent to the door on the latch side, in all enclosed stairways in buildings two or more stories in height to identify the floor level. At the exit discharge level, the sign shall include a raised five pointed star located to the left of the identifying floor level. The outside diameter of the star shall be the same as the height of the raised characters.*

***11B*-505 Handrails**

***11B*-505.1 General.** Handrails provided along walking surfaces complying with *Section 11B*-403, required at ramps complying with *Section 11B*-405, and required at stairs complying with *Section 11B*-504 shall comply with *Section 11B*-505.

***11B*-505.2 Where required.** Handrails shall be provided on both sides of stairs and ramps.

Exceptions:

1. In assembly areas, handrails shall not be required on both sides of aisle ramps where a handrail is provided at either side or within the aisle width.
2. *Curb ramps do not require handrails.*
3. *At door landings, handrails are not required when the ramp run is less than 6 inches (152 mm) in rise or 72 inches (1829 mm) in length.*

***11B*-505.2.1 Orientation.** *The orientation of at least one handrail shall be in the direction of the stair run, perpendicular to the direction of the stair nosing, and shall not reduce the minimum required width of the stair.*

***11B*-505.3 Continuity.** Handrails shall be continuous within the full length of each stair flight or ramp run. Inside handrails on switchback or dogleg stairs and ramps shall be continuous between flights or runs.

Exception: In assembly areas, *ramp* handrails *adjacent to seating or within the aisle width* shall not be required to be continuous in aisles serving seating.

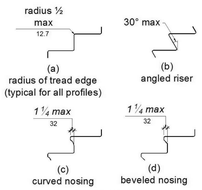

FIGURE *11B*-504.5
STAIR NOSINGS

***11B*-505.4 Height.** Top of gripping surfaces of handrails shall be 34 inches (*864* mm) minimum and 38 inches (965 mm) maximum vertically above walking surfaces, stair nosings, and ramp surfaces. Handrails shall be at a consistent height above walking surfaces, stair nosings, and ramp surfaces.

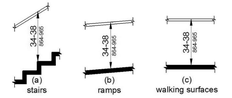

FIGURE *11B*-505.4
HANDRAIL HEIGHT

***11B*-505.5 Clearance.** Clearance between handrail gripping surfaces and adjacent surfaces shall be $1^1/_2$ inches (38 mm) minimum. *Handrails may be located in a recess if the recess is 3 inches (76 mm) maximum deep and 18 inches (457 mm) minimum clear above the top of the handrail.*

FIGURE *11B*-505.5
HANDRAIL CLEARANCE

***11B*-505.6 Gripping surface.** Handrail gripping surfaces shall be continuous along their length and shall not be obstructed along their tops or sides. The bottoms of handrail gripping surfaces shall not be obstructed for more than 20 percent of their length. Where provided, horizontal projections shall occur $1^1/_2$ inches (38 mm) minimum below the bottom of the handrail gripping surface.

Exceptions:

1. Where handrails are provided along walking surfaces with slopes not steeper than 1:20, the bottoms of handrail gripping surfaces shall be permitted to be obstructed along their entire length where they are integral to crash rails or bumper guards.
2. The distance between horizontal projections and the bottom of the gripping surface shall be permitted to be reduced by $^1/_8$ inch (3.2 mm) for each $^1/_2$ inch (*12.7* mm) of additional handrail perimeter dimension that exceeds 4 inches (*102* mm).

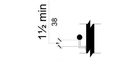

FIGURE *11B*-505.6
HORIZONTAL PROJECTIONS BELOW GRIPPING SURFACE

***11B*-505.7 Cross section.** Handrail gripping surfaces shall have a cross section complying with *Section 11B*-505.7.1 or *11B*-505.7.2.

***11B*-505.7.1 Circular cross section.** Handrail gripping surfaces with a circular cross section shall have an outside diameter of $1^1/_4$ inches (32 mm) minimum and 2 inches (51 mm) maximum.

***11B*-505.7.2 Non-circular cross sections.** Handrail gripping surfaces with a non-circular cross section shall have a perimeter dimension of 4 inches (*102* mm) minimum and $6^1/_4$ inches (*159* mm) maximum, and a cross-section dimension of $2^1/_4$ inches (57 mm) maximum.

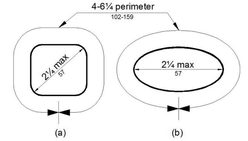

FIGURE *11B*-505.7.2
HANDRAIL NON-CIRCULAR CROSS SECTION

***11B*-505.8 Surfaces.** Handrail gripping surfaces and any surfaces adjacent to them shall be free of sharp or abrasive elements and shall have rounded edges.

***11B*-505.9 Fittings.** Handrails shall not rotate within their fittings.

***11B*-505.10 Handrail extensions.** Handrail gripping surfaces shall extend beyond and in the same direction of stair flights and ramp runs in accordance with *Section 11B*-505.10.

Exceptions:

1. Extensions shall not be required for continuous handrails at the inside turn of switchback or dogleg stairs and ramps.
2. In assembly areas, extensions shall not be required for ramp handrails in aisles serving seating where the handrails are discontinuous to provide access to seating and to permit crossovers within aisles.
3. In alterations, *where the extension of the handrail in the direction of stair flight or ramp run would create a hazard, the extension of the handrail may be turned 90 degrees from the direction of stair flight or ramp run.*

***11B*-505.10.1 Top and bottom extension at ramps.** Ramp handrails shall extend horizontally above the landing for 12 inches (305 mm) minimum beyond the top and bottom of ramp runs. Extensions shall return to a wall, guard, or the landing surface, or shall be continuous to the handrail of an adjacent ramp run.

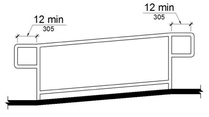

FIGURE *11B*-505.10.1
TOP AND BOTTOM HANDRAIL EXTENSION AT RAMPS

***11B*-505.10.2 Top extension at stairs.** At the top of a stair flight, handrails shall extend horizontally above the landing for 12 inches (305 mm) minimum beginning directly above the first riser nosing. Extensions shall return to a wall, guard, or the landing surface, or shall be continuous to the handrail of an adjacent stair flight.

FIGURE *11B*-505.10.2
TOP HANDRAIL EXTENSION AT STAIRS

***11B*-505.10.3 Bottom extension at stairs.** At the bottom of a stair flight, handrails shall extend at the slope of the stair flight for a horizontal distance equal to one tread depth beyond the last riser nosing. *The horizontal extension of a handrail shall be 12 inches (305 mm) long minimum and a height equal to that of the sloping portion of the handrail as measured above the stair nosings.* Extension shall return to a wall, guard, or the landing surface, or shall be continuous to the handrail of an adjacent stair flight.

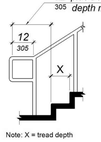

FIGURE *11B*-505.10.3
BOTTOM HANDRAIL EXTENSION AT STAIRS

DIVISION 6: PLUMBING ELEMENTS AND FACILITIES

***11B*-601 General**

***11B*-601.1 Scope.** The provisions of *Division* 6 shall apply where required by *Division* 2 or where referenced by a requirement in this *chapter*.

***11B*-602 Drinking fountains**

***11B*-602.1 General.** Drinking fountains shall comply with *Sections 11B*-307 and *11B*-602.

***11B*-602.2 Clear floor space.** Units shall have a clear floor or ground space complying with *Section 11B*-305 positioned for a forward approach and centered on the unit. Knee and toe clearance complying with *Section 11B*-306 shall be provided.

Exception: A parallel approach complying with *Section 11B*-305 shall be permitted at units for children's use where the spout is 30 inches (762 mm) maximum above the finish floor or ground and is $3^1/_2$ inches (*89* mm) maximum from the front edge of the unit, including bumpers.

***11B*-602.3 Operable parts.** Operable parts shall comply with *Section 11B*-309. *The flow of water shall be activated by a manually operated system that is front mounted or side mounted and located within 6 inches (152 mm) of the front edge of the fountain or an automatic electronically controlled device.*

***11B*-602.4 Spout height.** Spout outlets shall be 36 inches (*914* mm) maximum above the finish floor or ground.

***11B*-602.5 Spout location.** The spout shall be located 15 inches (*381* mm) minimum from the vertical support and 5 inches (*127* mm) maximum from the front edge of the unit, including bumpers.

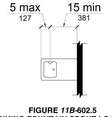

FIGURE *11B*-602.5
DRINKING FOUNTAIN SPOUT LOCATION

***11B*-602.6 Water flow.** The spout shall provide a flow of water 4 inches (*102* mm) high minimum and shall be located 5 inches (*127* mm) maximum from the front of the unit. The angle of the water stream shall be measured horizontally relative to the front face of the unit. Where spouts are located less than 3 inches (*76* mm) of the front of the unit, the angle of the water stream shall be 30 degrees maximum. Where spouts are located between 3 inches (*76* mm) and 5 inches (*127* mm) maximum from the front of the unit, the angle of the water stream shall be 15 degrees maximum.

***11B*-602.7 Drinking fountains for standing persons.** Spout outlets of drinking fountains for standing persons shall be 38 inches (965 mm) minimum and 43 inches (*1092* mm) maximum above the finish floor or ground.

***11B*-602.8 Depth.** *Wall- and post-mounted cantilevered drinking fountains shall be 18 inches (457 mm) minimum and 19 inches (483 mm) maximum in depth.*

***11B*-602.9 Pedestrian protection.** *All drinking fountains shall either be located completely within alcoves, positioned completely between wing walls, or otherwise positioned so as not to encroach into pedestrian ways. The protected area within which a drinking fountain is located shall be 32 inches (813 mm) wide minimum and 18 inches (457 mm) deep minimum, and shall comply with Section 11B-305.7. When used, wing walls or barriers shall project horizontally at least as far as the drinking fountain and to within 6 inches (152 mm) vertically from the floor or ground surface.*

***11B*-603 Toilet and bathing rooms**

***11B*-603.1 General.** Toilet and bathing rooms shall comply with *Section 11B*-603.

***11B*-603.2 Clearances.** Clearances shall comply with *Section 11B*-603.2.

***11B*-603.2.1 Turning space.** Turning space complying with *Section 11B*-304 shall be provided within the room.

***11B*-603.2.2 Overlap.** Required clear floor spaces, clearance at fixtures, and turning space shall be permitted to overlap.

***11B*-603.2.3 Door swing.** Doors shall not swing into the clear floor space or clearance required for any fixture. *Doors to accessible water closet compartments shall be permitted to encroach into the turning space without limitation. Other than doors to accessible water closet compartments, a door, in any position, shall be permitted to encroach into the turning space by 12 inches (305 mm) maximum.*

Exceptions:

1. ***Reserved.***
2. Where the toilet room or bathing room is for individual use and a clear floor space complying with *Section 11B*-305.3 is provided within the room beyond the arc of the door swing, doors shall be permitted to swing into the clear floor space or clearance required for any fixture.
3. *In residential dwelling units complying with Section 11B-233.3.1.1, doors shall be permitted to swing over the turning space without limitation.*

***11B*-603.3 Mirrors.** Mirrors located above lavatories or countertops shall be installed with the bottom edge of the reflecting surface 40 inches (*1016* mm) maximum above the finish floor or ground. Mirrors not located above lavatories or countertops shall be installed with the bottom edge of the reflecting surface 35 inches (*889* mm) maximum above the finish floor or ground.

***11B*-603.4 Coat hooks, shelves *and medicine cabinets*.** Coat hooks shall be located within one of the reach ranges specified in *Section 11B*-308. Shelves shall be located 40 inches (*1016* mm) minimum and 48 inches (*1219* mm) maximum above the finish floor. *Medicine cabinets shall be located with a usable shelf no higher than 44 inches (1118 mm) maximum above the finish floor.*

***11B*-603.5 Accessories.** *Where towel or sanitary napkin dispensers, waste receptacles, or other accessories are provided in toilet facilities, at least one of each type shall be located on an accessible route. All operable parts, including coin slots, shall be 40 inches (1016 mm) maximum above the finish floor.*

Exception: *Baby changing tables are not required to comply with Section 11B-603.5.*

***11B*-603.6 Guest room toilet and bathing rooms.** *Toilet and bathing rooms within guest rooms that are not required to provide mobility features complying with Section 11B-806.2 shall provide all toilet and bathing fixtures in a location that allows a person using a wheelchair measuring 30 inches by 48 inches (762 mm by 1219 mm) to touch the wheelchair to any lavatory, urinal, water closet, tub, sauna, shower stall and any other similar sanitary installation, if provided.*

***11B*-604 Water closets and toilet compartments**

***11B*-604.1 General.** Water closets and toilet compartments shall comply with *Sections 11B*-604.2 through *11B*-604.8.

Exception: Water closets and toilet compartments for children's use shall be permitted to comply with *Section 11B*-604.9.

***11B*-604.2 Location.** The water closet shall be positioned with a wall or partition to the rear and to one side. The centerline of the water closet shall be *17 inches (432 mm)* minimum to 18 inches (*457* mm) maximum from the side wall or partition, except that the water closet shall be 17 inches (*432* mm) minimum and 19 inches (*483* mm) maximum from the side wall or partition in the ambulatory accessible toilet compartment specified in *Section 11B*-604.8.2. Water closets shall be arranged for a left-hand or right-hand approach.

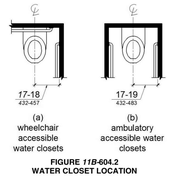

FIGURE *11B*-604.2
WATER CLOSET LOCATION

***11B*-604.3 Clearance.** Clearances around water closets and in toilet compartments shall comply with *Section 11B*-604.3.

***11B*-604.3.1 Size.** Clearance around a water closet shall be 60 inches (*1524* mm) minimum measured perpendicular from the side wall and 56 inches (*1422* mm) minimum measured perpendicular from the rear wall. *A minimum 60 inches (1524 mm) wide and 48 inches (1219 mm) deep maneuvering space shall be provided in front of the water closet.*

Exception: *In residential dwelling units complying with Section 11B-233.3.1.1, maneuvering space in front of the water closet shall be a minimum 60 inches (1524 mm) wide and 36 inches (914 mm) deep.*

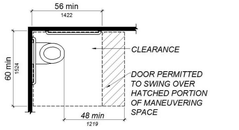

FIGURE *11B*-604.3.1
SIZE OF CLEARANCE AT WATER CLOSETS

***11B*-604.3.2 Overlap.** The required clearance around the water closet shall be permitted to overlap the water closet, associated grab bars, dispensers, sanitary napkin disposal units, coat hooks, shelves, accessible routes, clear floor space and clearances required at other fixtures, and the turning space. No other fixtures or obstructions shall be located within the required water closet clearance.

Exception: In residential dwelling units, a lavatory complying with *Section 11B*-606 shall be permitted on the rear wall 18 inches (*457* mm) minimum from the water closet centerline where the clearance at the water closet is 66 inches (*1676* mm) minimum measured perpendicular from the rear wall.

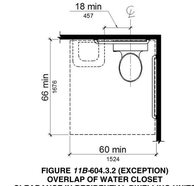

FIGURE *11B*-604.3.2 (EXCEPTION)
OVERLAP OF WATER CLOSET CLEARANCE IN RESIDENTIAL DWELLING UNITS

***11B*-604.4 Seats.** The seat height of a water closet above the finish floor shall be 17 inches (*432* mm) minimum and 19 inches (*483* mm) maximum measured to the top of the seat. Seats shall not be sprung to return to a lifted position. *Seats shall be 2 inches (51 mm) high maximum.*

Exceptions:

1. ***Reserved.***
2. In residential dwelling units, the height of water closets shall be permitted to be 15 inches (*381* mm) minimum and 19 inches (*483* mm) maximum above the finish floor measured to the top of the seat.
3. *A 3-inch (76 mm) high seat shall be permitted only in alterations where the existing fixture is less than 15 inches (381 mm) high.*

***11B*-604.5 Grab bars.** Grab bars for water closets shall comply with *Section 11B*-609. Grab bars shall be provided on the side wall closest to the water closet and on the rear wall. *Where separate grab bars are required on adjacent walls at a common mounting height, an L-shaped grab bar meeting the dimensional requirements of Sections 11B-604.5.1 and 11B-604.5.2 shall be permitted.*

Exceptions:

1. ***Reserved.***
2. In residential dwelling units, grab bars shall not be required to be installed in toilet or bathrooms provided that reinforcement has been installed in walls and located so as to permit the installation of grab bars complying with *Section 11B*-604.5.
3. In detention or correction facilities, grab bars shall not be required to be installed in housing or holding cells that are specially designed without protrusions for purposes of suicide prevention.

***11B*-604.5.1 Side wall.** The side wall grab bar shall be 42 inches (*1067* mm) long minimum, located 12 inches (305 mm) maximum from the rear wall and extending 54 inches (*1372* mm) minimum from the rear wall *with the front end positioned 24 inches (610 mm) minimum in front of the water closet.*

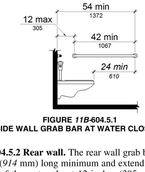

FIGURE *11B*-604.5.1
SIDE WALL GRAB BAR AT WATER CLOSETS

***11B*-604.5.2 Rear wall.** The rear wall grab bar shall be 36 inches (*914* mm) long minimum and extend from the centerline of the water closet 12 inches (305 mm) minimum on one side and 24 inches (610 mm) minimum on the other side.

Exceptions:

1. The rear grab bar shall be permitted to be 24 inches (610 mm) long minimum, centered on the water closet, where wall space does not permit a length of 36 inches (*914* mm) minimum due to the location of a recessed fixture adjacent to the water closet.
2. Where an administrative authority requires flush controls for flush valves to be located in a position that conflicts with the location of the rear grab bar, then the rear grab bar shall be permitted to be split or shifted to the open side of the toilet area.

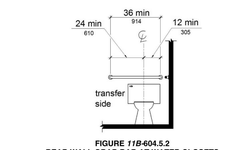

FIGURE *11B*-604.5.2
REAR WALL GRAB BAR AT WATER CLOSETS

***11B*-604.6 Flush controls.** Flush controls shall be hand operated or automatic. Hand operated flush controls shall comply with *Section 11B*-309 *except they shall be located 44 inches (1118 mm) maximum above the floor*. Flush controls shall be located on the open side of the water closet except in ambulatory accessible compartments complying with *Section 11B*-604.8.2.

***11B*-604.7 Dispensers.** Toilet paper dispensers shall comply with *Section 11B*-309.4 and shall be 7 inches (*178* mm) minimum and 9 inches (*229* mm) maximum in front of the water closet measured to the centerline of the dispenser. The outlet of the dispenser shall be *below the grab bar, 19 inches (483 mm) minimum* above the finish floor and shall not be located behind grab bars. Dispensers shall not be of a type that controls delivery or that does not allow continuous paper flow.

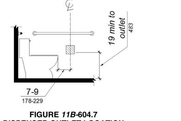

FIGURE *11B*-604.7
DISPENSER OUTLET LOCATION

THE CITY OF LOS ANGELES OR ITS OFFICERS OR AGENTS SHALL NOT BE RESPONSIBLE FOR THE ACCURACY OR COMPLETENESS OF ELECTRONIC COPIES OF THIS PLAN SHEET.
FILE PATH: A360://Studio City Recreation Center/SCRC-Project Model_Central_Final.rvt
SHEET ISSUE DATE:01/01/14
REVISION DATES: (DESIGN STAGE ONLY)
BUREAU OF ENGINEERING
DEPARTMENT OF PUBLIC WORKS
CITY OF LOS ANGELES
ENGINEERING
CITY OF LOS ANGELES
NO. | REVISION DESCRIPTION | DATE | BY
INDEX NO. RP-300106
BUILDING NO. -
TED ALLEN, PE
CITY ENGINEER
DATE: 1-24-2019
ARCHITECTURAL DIVISION
LIC. NO.: C 23333
ARCHITECT: ROBERT LOMELIN 1-24-2019
DESIGNED BY: Z. AKHTER, M. CHAVARRIA, A. KIM, M. LAM 1-24-2019
DRAWN BY: Z. AKHTER, M. CHAVARRIA, A. KIM 1-24-2019
CHECKED BY: ROBERT LOMELIN 1-24-2019
APPROVED BY:MAHMOOD KARIMZADEH,AIA, DEPUTY CITY ENGINEER 1-24-2019
CLIENT: DEPARTMENT OF RECREATION AND PARKS
GENERAL MANAGER: MICHAEL A. SHULL
SHEET TITLE: TITLE 24- DISABLED ACCESS REQUIREMENTS
PROJECT: STUDIO CITY RECREATION CENTER
ADDRESS: 12621 RYE STREET, STUDIO CITY, CA 91604
LICENSED ARCHITECT ROBERT LOMELIN No. C 23333 Renewal 08/31/2019 STATE OF CALIFORNIA
WORK ORDER NO. E170267B
PLAN FILE NO. 860
DRAWING NO. G109
SHEET 17 OF SHEETS 211
BUREAU OF ENGINEERING OFFICIAL RECORD
PLOTTED:7/1/2019 11:34:59 AM

***11B*-604.8 Toilet compartments.** Wheelchair accessible toilet compartments shall meet the requirements of *Sections 11B*-604.8.1 and *11B*-604.8.3. Compartments containing more than one plumbing fixture shall comply with *Section 11B*-603. Ambulatory accessible compartments shall comply with *Sections 11B*-604.8.2 and *11B*-604.8.3.

***11B*-604.8.1 Wheelchair accessible compartments.** Wheelchair accessible compartments shall comply with *Section 11B*-604.8.1.

***11B*-604.8.1.1 Size.** Wheelchair accessible compartments shall be 60 inches (*1524* mm) wide minimum measured perpendicular to the side wall, and 56 inches (*1422* mm) deep minimum for wall hung water closets and 59 inches (*1499* mm) deep minimum for floor mounted water closets measured perpendicular to the rear wall. *Wheelchair accessible compartments shall additionally provide maneuvering space complying with Section 11B-604.8.1.1.1, 11B-604.8.1.1.2, or 11B-604.8.1.1.3, as applicable.* Wheelchair accessible compartments for children's use shall be 60 inches (*1524* mm) wide minimum measured perpendicular to the side wall, and 59 inches (*1499* mm) deep minimum for wall hung and floor mounted water closets measured perpendicular to the rear wall.

***11B*-604.8.1.1.1 Maneuvering space with in-swinging door.** *In a wheelchair accessible compartment with an in-swinging door, a minimum 60 inches (1524 mm) wide by 36 inches (914 mm) deep maneuvering space shall be provided in front of the clearance required in Section 11B-604.8.1.1. See Figures 11B-604.8.1.1.2 (b) and 11B-604.8.1.1.3 (b).*

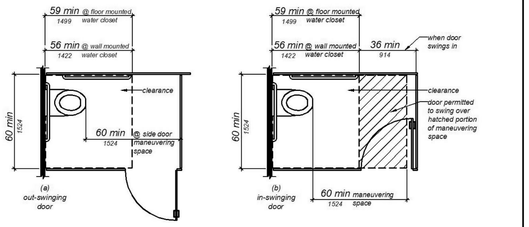

FIGURE *11B*-604.8.1.1.2
MANEUVERING SPACE WITH SIDE-OPENING DOOR

***11B*-604.8.1.1.2 Maneuvering space with side-opening door.** *In a wheelchair accessible compartment with a door located in the side wall or partition, either in-swinging or out-swinging, a minimum 60 inches (1524 mm) wide and 60 inches (1524 mm) deep maneuvering space shall be provided in front of the water closet. See Figure 11B-604.8.1.1.2.*

***11B*-604.8.1.1.3 Maneuvering space with end-opening door.** *In a wheelchair accessible compartment with a door located in the front wall or partition (facing the water closet), either in-swinging or out-swinging, a minimum 60 inches (1524 mm) wide and 48 inches (1219 mm) deep maneuvering space shall be provided in front of the water closet. See Figure 11B-604.8.1.1.3.*

***11B*-604.8.1.2 Doors.** Toilet compartment doors, including door hardware, shall comply with *Section 11B*-404 except that if the approach is *from the push side* of the compartment door, clearance between the door side of the compartment and any obstruction shall be *48 inches (1219 mm)* minimum *measured perpendicular to the compartment door in its closed position*. Doors shall be located in the front partition or in the side wall or partition farthest from the water closet. Where located in the front partition, the door opening shall be 4 inches (*102* mm) maximum from the side wall or partition farthest from the water closet. Where located in the side wall or partition, the door opening shall be 4 inches (*102* mm) maximum from the front partition. The door shall be self-closing. A door pull complying with *Section 11B*-404.2.7 shall be placed on both sides of the door near the latch. *Doors shall not swing into the clear floor space or clearance required for any fixture. Doors may swing into that portion of maneuvering space which does not overlap the clearance required at a water closet.*

Exception: *When located at the side of a toilet compartment, the toilet compartment door opening shall provide a clear width of 34 inches (864 mm) minimum.*

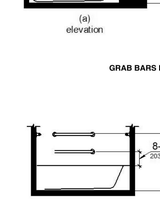

FIGURE *11B*-604.8.1.2
WHEELCHAIR ACCESSIBLE TOILET COMPARTMENT DOORS

***11B*-604.8.1.3 Approach.** Compartments shall be arranged for left-hand or right-hand approach to the water closet.

***11B*-604.8.1.4 Toe clearance.** *At* least one side partition shall provide a toe clearance of 9 inches (*229* mm) minimum above the finish floor and 6 inches (*152* mm) deep minimum beyond the compartment-side face of the partition, exclusive of partition support members. *Partition components at toe clearances shall be smooth without sharp edges or abrasive surfaces.* Compartments for children's use shall provide a toe clearance of 12 inches (305 mm) minimum above the finish floor.

Exception: Toe clearance at the side partition is not required in a compartment greater than 66 inches (*1676* mm) wide.

***11B*-604.8.1.5 Grab bars.** Grab bars shall comply with *Section 11B-609*. A side-wall grab bar complying with *Section 11B*-604.5.1 shall be provided and shall be located on the wall closest to the water closet. In addition, a rear-wall grab bar complying with *Section 11B*-604.5.2 shall be provided. *Where separate grab bars are required on adjacent walls at a common mounting height, an L-shaped grab bar meeting the dimensional requirements of Sections 11B-604.5.1 and 11B-604.5.2 shall be permitted.*

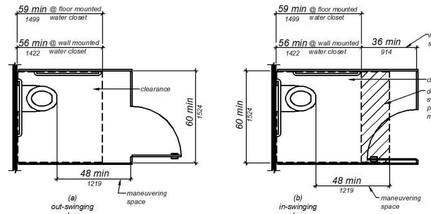

FIGURE *11B*-604.8.1.1.3
MANEUVERING SPACE WITH END-OPENING DOOR

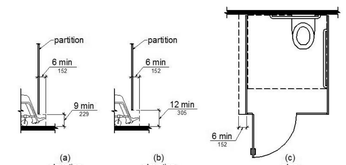

FIGURE *11B*-604.8.1.4
WHEELCHAIR ACCESSIBLE TOILET COMPARTMENT TOE CLEARANCE

***11B*-604.8.2 Ambulatory accessible compartments.** Ambulatory accessible compartments shall comply with *Section 11B*-604.8.2.

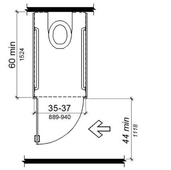

***11B*-604.8.2**
AMBULATORY ACCESSIBLE TOILET COMPARTMENT

***11B*-604.8.2.1 Size.** Ambulatory accessible compartments shall have a depth of 60 inches (*1524* mm) minimum and a width of 35 inches (*889* mm) minimum and 37 inches (940 mm) maximum.

***11B*-604.8.2.2 Doors.** Toilet compartment doors, including door hardware, shall comply with *Section 11B*-404, except that if the approach is to the latch side of the compartment door, clearance between the door side of the compartment and any obstruction shall be *44 inches (1118 mm)* minimum. The door shall be self-closing. A door pull complying with *Section 11B*-404.2.7 shall be placed on both sides of the door near the latch. Toilet compartment doors shall not swing into the minimum required compartment area.

***11B*-604.8.2.3 Grab bars.** Grab bars shall comply with *Section 11B-609*. A side-wall grab bar complying with *Section 11B*-604.5.1 shall be provided on both sides of the compartment.

***11B*-604.8.3 Coat hooks and shelves.** Coat hooks shall be located within one of the reach ranges specified in *Section 11B*-308. Shelves shall be located 40 inches (*1016* mm) minimum and 48 inches (*1219* mm) maximum above the finish floor.

***11B*-604.9 Water closets and toilet compartments for children's use.** Water closets and toilet compartments for children's use shall comply with *Section 11B*-604.9. *When the exception in Section 11B-604.1 is used, the suggested dimensions of Table 11B-604.9 for a single age group shall be applied consistently to the installation of a water closet and all associated components.*

***11B*-604.9.1 Location.** The water closet shall be located with a wall or partition to the rear and to one side. The centerline of the water closet shall be 12 inches (305 mm) minimum and 18 inches (*457* mm) maximum from the side wall or partition, except that the water closet shall be 17 inches (*432* mm) minimum and 19 inches (*483* mm) maximum from the side wall or partition in the ambulatory accessible toilet compartment specified in *Section 11B*-604.8.2. Compartments shall be arranged for left-hand or right-hand approach to the water closet.

***11B*-604.9.2 Clearance.** Clearance around a water closet shall comply with *Section 11B*-604.3.

***11B*-604.9.3 Height.** The height of water closets shall be 11 inches (*279* mm) minimum and 17 inches (*432* mm) maximum measured to the top of the seat. Seats shall not be sprung to return to a lifted position.

***11B*-604.9.4 Grab bars.** Grab bars for water closets shall comply with *Section 11B*-604.5.

***11B*-604.9.5 Flush controls.** Flush controls shall be hand operated or automatic. Hand operated flush controls shall comply with *Sections 11B*-309.2 and *11B*-309.4 and shall be installed 36 inches (*914* mm) maximum above the finish floor. Flush controls shall be located on the open side of the water closet except in ambulatory accessible compartments complying with *Section 11B*-604.8.2.

TABLE 11B-604.9
SUGGESTED DIMENSIONS FOR CHILDREN'S USE

SUGGESTED DIMENSIONS FOR WATER CLOSETS SERVING CHILDREN AGES 3 THROUGH 12			
	Ages 3 and 4	Ages 5 through 8	Ages 9 through 12
Water Closet Centerline	12 inches (305 mm)	12 to 15 inches (305 to *381* mm)	15 to 18 inches (*381* to *457* mm)
Toilet Seat Height	11 to 12 inches (*279* to 305 mm)	12 to 15 inches (305 to *381* mm)	15 to 17 inches (*381* to *432* mm)
Grab Bar Height	18 to 20 inches (*457* to *508* mm)	20 to 25 inches (*508* to 635 mm)	25 to 27 inches (635 to *686* mm)
Dispenser Height	14 inches (*356* mm)	14 to 17 inches (*356* to *432* mm)	17 to 19 inches (*432* to *483* mm)

***11B*-604.9.6 Dispensers.** Toilet paper dispensers shall comply with *Section 11B*-309.4 and shall be 7 inches (*178* mm) minimum and 9 inches (*229* mm) maximum in front of the water closet measured to the centerline of the dispenser. The outlet of the dispenser shall be 14 inches (*356* mm) minimum and 19 inches (*483* mm) maximum above the finish floor. There shall be a clearance of 1½ inches (38 mm) minimum below the grab bar. Dispensers shall not be of a type that controls delivery or that does not allow continuous paper flow.

***11B*-604.9.7 Toilet compartments.** Toilet compartments shall comply with *Section 11B*-604.8.

***11B*-605 Urinals**

***11B*-605.1 General.** Urinals shall comply with *Section 11B*-605.

***11B*-605.2 Height and depth.** Urinals shall be the stall-type or the wall-hung type with the rim 17 inches (*432* mm) maximum above the finish floor or ground. Urinals shall be 13½ inches (*343* mm) deep minimum measured from the outer face of the urinal rim to the back of the fixture.

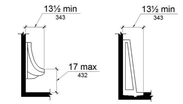

FIGURE *11B*-605.2
HEIGHT AND DEPTH OF URINALS

***11B*-605.3 Clear floor space.** A clear floor or ground space complying with *Section 11B*-305 positioned for forward approach shall be provided.

***11B*-605.4 Flush controls.** Flush controls shall be hand operated or automatic. Hand operated flush controls shall comply with *Section 11B*-309 *except that the flush control shall be mounted at a maximum height of 44 inches (1118 mm) above the finish floor.*

***11B*-606 Lavatories and sinks**

***11B*-606.1 General.** Lavatories and sinks shall comply with *Section 11B*-606.

***11B*-606.2 Clear floor space.** A clear floor space complying with *Section 11B*-305, positioned for a forward approach, and knee and toe clearance complying with *Section 11B*-306 shall be provided.

Exceptions:

1. A parallel approach complying with *Section 11B*-305 shall be permitted to a kitchen sink in a space where a cook top or conventional range is not provided and to wet bars.
2. ***Reserved.***
3. In residential dwelling units, cabinetry shall be permitted under lavatories and kitchen sinks provided that all of the following conditions are met:
   (a) the cabinetry can be removed without removal or replacement of the fixture;
   (b) the finish floor extends under the cabinetry; and
   (c) the walls behind and surrounding the cabinetry are finished.
4. A knee clearance of 24 inches (610 mm) minimum above the finish floor or ground shall be permitted at lavatories and sinks used primarily by children 6 through 12 years where the rim or counter surface is 31 inches (*787* mm) maximum above the finish floor or ground.
5. A parallel approach complying with *Section 11B*-305 shall be permitted to lavatories and sinks used primarily by children 5 years and younger.
6. The dip of the overflow shall not be considered in determining knee and toe clearances.
7. No more than one bowl of a multi-bowl sink shall be required to provide knee and toe clearance complying with *Section 11B*-306.

***11B*-606.3 Height.** Lavatories and sinks shall be installed with the front of the higher of the rim or counter surface 34 inches (*864* mm) maximum above the finish floor or ground.

Exceptions:

1. ***Reserved.***
2. In residential dwelling unit kitchens, sinks that are adjustable to variable heights, 29 inches (*737* mm) minimum and 36 inches (*914* mm) maximum, shall be permitted where rough-in plumbing permits connections of supply and drain pipes for sinks mounted at the height of 29 inches (*737* mm).

***11B*-606.4 Faucets.** Controls for faucets shall comply with *Section 11B*-309. Hand-operated metering faucets shall remain open for 10 seconds minimum.

***11B*-606.5 Exposed pipes and surfaces.** Water supply and drain pipes under lavatories and sinks shall be insulated or otherwise configured to protect against contact. There shall be no sharp or abrasive surfaces under lavatories and sinks.

***11B*-606.6 Adjacent side wall or partition.** *Lavatories, when located adjacent to a side wall or partition, shall be a minimum of 18 inches (457 mm) to the centerline of the fixture.*

***11B*-606.7 Sink depth.** *Where a forward approach is required at a sink, knee and toe clearance shall be provided in compliance with Section 11B-306.*

***11B*-607 Bathtubs**

***11B*-607.1 General.** Bathtubs shall comply with *Section 11B*-607.

***11B*-607.2 Clearance.** Clearance in front of bathtubs shall extend the length of the bathtub and shall be *48 inches (1219 mm) wide minimum for forward approach and* 30 inches (*762* mm) wide minimum *for parallel approach*. A lavatory complying with *Section 11B*-606 shall be permitted at the control end of the clearance. Where a permanent seat is provided at the head end of the bathtub, the clearance shall extend 12 inches (305 mm) minimum beyond the wall at the head end of the bathtub.

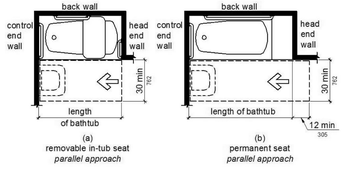

FIGURE *11B*-607.2
CLEARANCE FOR BATHTUBS

***11B*-607.3 Seat.** A permanent seat at the head end of the bathtub or a removable in-tub seat shall be provided. Seats shall comply with *Section 11B*-610.

***11B*-607.4 Grab bars.** Grab bars for bathtubs shall comply with *Section 11B*-609 and shall be provided in accordance with *Section 11B*-607.4.1 or *11B*-607.4.2. *Where separate grab bars are required on adjacent walls at a common mounting height, an L-shaped or U-shaped grab bar meeting the dimensional requirements of Section 11B-607.4.1 or 11B-607.4.2 shall be permitted.*

Exceptions:

1. ***Reserved.***
2. In residential dwelling units, grab bars shall not be required to be installed in bathtubs located in bathing facilities provided that reinforcement has been installed in walls and located so as to permit the installation of grab bars complying with *Section 11B*-607.4.

***11B*-607.4.1 Bathtubs with permanent seats.** For bathtubs with permanent seats, grab bars shall be provided in accordance with *Section 11B*-607.4.1.

***11B*-607.4.1.1 Back wall.** Two grab bars shall be installed on the back wall, one located in accordance with *Section 11B*-609.4 and the other located 8 inches (*203* mm) minimum and 10 inches (*254* mm) maximum above the rim of the bathtub. Each grab bar shall be installed 15 inches (*381* mm) maximum from the head end wall and 12 inches (305 mm) maximum from the control end wall.

***11B*-607.4.1.2 Control end wall.** A grab bar 24 inches (610 mm) long minimum shall be installed on the control end wall at the front edge of the bathtub.

***11B*-607.4.2 Bathtubs without permanent seats.** For bathtubs without permanent seats, grab bars shall comply with *Section 11B*-607.4.2.

***11B*-607.4.2.1 Back wall.** Two grab bars shall be installed on the back wall, one located in accordance with *Section 11B-609.4* and the other located 8 inches (*203* mm) minimum and 10 inches (*254* mm) maximum above the rim of the bathtub. Each grab bar shall be installed 24 inches (610 mm) long minimum and shall be installed 24 inches (610 mm) maximum from the head end wall and 12 inches (305 mm) maximum from the control end wall.

***11B*-607.4.2.2 Control end wall.** A grab bar 24 inches (610 mm) long minimum shall be installed on the control end wall at the front edge of the bathtub.

***11B*-607.4.2.3 Head end wall.** A grab bar 12 inches (305 mm) long minimum shall be installed on the head end wall at the front edge of the bathtub.

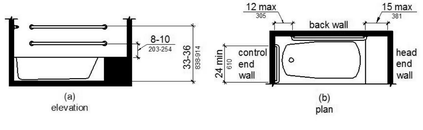

FIGURE *11B*-607.4.1
GRAB BARS FOR BATHTUBS WITH PERMANENT SEATS

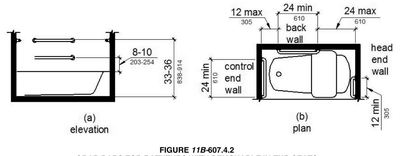

FIGURE *11B*-607.4.2
GRAB BARS FOR BATHTUBS WITH REMOVABLE IN-TUB SEATS

***11B*-607.5 Controls.** Controls, other than drain stoppers, shall be located on an end wall. Controls shall be between the bathtub rim and grab bar, and between the open side of the bathtub and the centerline of the width of the bathtub. Controls shall comply with *Section 11B*-309.4.

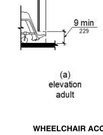

FIGURE *11B*-607.5
BATHTUB CONTROL LOCATION

***11B*-607.6 Shower spray unit and water.** A shower spray unit with a hose 59 inches (*1499* mm) long minimum that can be used both as a fixed-position shower head and as a hand-held shower shall be provided. The shower spray unit shall have an on/off control with a non-positive shut-off. If an adjustable-height shower head on a vertical bar is used, the bar shall be installed so as not to obstruct the use of grab bars. Bathtub shower spray units shall deliver water that is 120°F (49°C) maximum.

***11B*-607.7 Bathtub enclosures.** Enclosures for bathtubs shall not obstruct controls, faucets, shower and spray units or obstruct transfer from wheelchairs onto bathtub seats or into bathtubs. Enclosures on bathtubs shall not have tracks installed on the rim of the open face of the bathtub.

***11B*-608 Shower compartments**

***11B*-608.1 General.** Shower compartments shall comply with *Section 11B*-608.

***11B*-608.2 Size and clearances for shower compartments.** Shower compartments shall have sizes and clearances complying with *Section 11B*-608.2.

11B*-608.2.1 *Reserved.

***11B*-608.2.2 Standard roll-in type shower compartments.** Standard roll-in type shower compartments shall be 30 inches (*762* mm) wide minimum by 60 inches (*1524* mm) deep minimum clear inside dimensions measured at center points of opposing sides *with a full opening width on the long side*.

***11B*-608.2.2.1 Clearance.** A *36 inch (914 mm)* wide minimum by 60 inch (*1524* mm) long minimum clearance shall be provided adjacent to the open face of the shower compartment.

Exception: ***Reserved.***

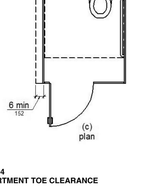

Note: inside finished dimensions measured at the center points of opposing sides

FIGURE *11B*-608.2.2
STANDARD ROLL-IN TYPE
SHOWER COMPARTMENT SIZE AND CLEARANCE

***11B*-608.2.3 Alternate roll-in type shower compartments.** Alternate roll-in type shower compartments shall be 36 inches (*914* mm) wide and 60 inches (*1524* mm) deep minimum clear inside dimensions measured at center points of opposing sides. A 36 inch (*914* mm) wide minimum entry shall be provided at one end of the long side of the compartment.

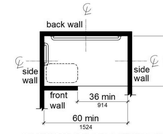

Note: inside finished dimensions measured at the center points of opposing sides

FIGURE *11B*-608.2.3
ALTERNATE ROLL-IN TYPE
SHOWER COMPARTMENT SIZE AND CLEARANCE

***11B*-608.3 Grab bars.** Grab bars shall comply with *Section 11B*-609 and shall be provided in accordance with *Section 11B*-608.3. Where multiple grab bars are used, required horizontal grab bars shall be installed at the same height above the finish floor. *Where separate grab bars are required on adjacent walls at a common mounting height, an L-shaped or U-shaped grab bar meeting the dimensional requirements of Section 11B-608.3.2 or 11B-608.3.3 shall be permitted.*

Exceptions:

1. ***Reserved.***

2. In residential dwelling units, grab bars shall not be required to be installed in showers located in bathing facilities provided that reinforcement has been installed in walls and located so as to permit the installation of grab bars complying with *Section 11B*-608.3.

11B*-608.3.1 *Reserved.

***11B*-608.3.2 Standard roll-in type shower compartments.** *Grab* bars shall be provided on the back wall and the side wall opposite the seat. Grab bars shall not be provided above the seat. Grab bars shall be installed 6 inches (*152* mm) maximum from adjacent walls.

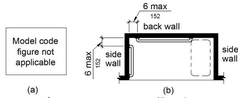

FIGURE *11B*-608.3.2
GRAB BARS FOR STANDARD ROLL-IN TYPE *SHOWER*

***11B*-608.3.3 Alternate roll-in type shower compartments.** In alternate roll-in type shower compartments, grab bars shall be provided on the back wall and the side wall farthest from the compartment entry. Grab bars shall not be provided above the seat. Grab bars shall be installed 6 inches (*152* mm) maximum from adjacent walls.

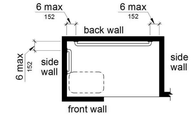

FIGURE *11B*-608.3.3
GRAB BARS FOR ALTERNATE ROLL-IN TYPE SHOWERS

***11B*-608.4 Seats.** A folding seat shall be provided in roll-in type showers. Seats shall comply with *Section 11B*-610.

Exception: In residential dwelling units, seats shall not be required in shower compartments provided that reinforcement has been installed in walls so as to permit the installation of seats complying with *Section 11B*-608.4.

***11B*-608.5 Controls.** Controls, faucets, and shower spray units shall comply with *Section 11B*-309.4. *Controls and faucets shall be of a single-lever design.*

11B*-608.5.1 *Reserved.

***11B*-608.5.2 Standard roll-in type shower compartments.** *In standard roll-in type shower compartments, operable parts of controls and faucets shall be installed on the back wall of the compartment adjacent to the seat wall 19 inches (483 mm) minimum and 27 inches (686 mm) maximum from the seat wall; and shall be located above the grab bar, but no higher than 48 inches (1219 mm) above the shower floor, with their centerline at 39 inches (991 mm) to 41 inches (1041 mm) above the shower floor.*

Operable parts of the shower spray unit, including the handle, shall be installed on the back wall adjacent to the seat wall 19 inches (483 mm) minimum and 27 inches (686 mm) maximum from the seat wall; and shall be located above the grab bar, but no higher than 48 inches (1219 mm) above the shower floor.

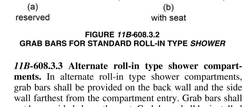

FIGURE *11B*-608.5.2
STANDARD ROLL-IN TYPE
SHOWER COMPARTMENT CONTROL LOCATION

***11B*-608.5.3 Alternate roll-in type shower compartments.** *In alternate roll-in type shower compartments, operable parts of controls and faucets shall be installed on the side wall of the compartment adjacent to the seat wall 19 inches (483 mm) minimum and 27 inches (686 mm) maximum from the seat wall; and shall be located above the grab bar, but no higher than 48 inches (1219 mm) above the shower floor, with their centerline at 39 inches (991 mm) to 41 inches (1041 mm) above the shower floor.*

Operable parts of the shower spray unit, including the handle, shall be installed on the side wall of the compartment adjacent to the seat wall 17 inches (432 mm) minimum and 19 inches (483 mm) maximum from the seat wall or on the back wall opposite the seat 15 inches (381 mm) maximum, left or right, of the centerline of the seat; and shall be located above the grab bar, but no higher than 48 inches (1219 mm) above the shower floor.

BUREAU OF ENGINEERING
CITY OF LOS ANGELES

NO.	REVISION DESCRIPTION	DATE	BY

BUILDING NO. -
INDEX NO. **RP-300106**

CITY OF LOS ANGELES
DEPARTMENT OF PUBLIC WORKS
BUREAU OF ENGINEERING

CITY ENGINEER: TED ALLEN, PE DATE: 1-24-2019
ARCHITECTURAL DIVISION LIC. NO.: C 23333
ARCHITECT: ROBERT LOMELIN DATE: 1-24-2019
DESIGNED BY: Z. AKHTER, M. CHAVARRIA, A. KIM, M. LAM DATE: 1-24-2019
DRAWN BY: Z. AKHTER, M. CHAVARRIA, A. KIM DATE: 1-24-2019
CHECKED BY: ROBERT LOMELIN DATE: 1-24-2019
APPROVED BY: MAHMOOD KARIMZADEH, AIA, DEPUTY CITY ENGINEER DATE: 1-24-2019

CLIENT: DEPARTMENT OF RECREATION AND PARKS
GENERAL MANAGER: MICHAEL A. SHULL

SHEET TITLE: TITLE 24- DISABLED ACCESS REQUIREMENTS

PROJECT: STUDIO CITY RECREATION CENTER

ADDRESS: 12621 RYE STREET, STUDIO CITY, CA 91604

BUREAU OF ENGINEERING
OFFICIAL RECORD

WORK ORDER NO. E170267B
PLAN FILE NO. 860
DRAWING NO. G110
SHEET 18 OF SHEETS 211

PLOTTED:7/1/2019 11:35:04 AM

THE CITY OF LOS ANGELES OR ITS OFFICERS OR AGENTS SHALL NOT BE RESPONSIBLE FOR THE ACCURACY OR COMPLETENESS OF ELECTRONIC COPIES OF THIS PLAN SHEET.
FILE PATH: A360://Studio City Recreation Center/SCRC-Project Model_Central_Final.rvt
SHEET ISSUE DATE:01/01/14
REVISION DATES: (DESIGN STAGE ONLY)

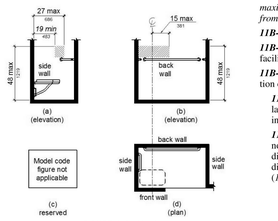

FIGURE *11B*-608.5.3
ALTERNATE ROLL-IN TYPE
SHOWER COMPARTMENT CONTROL LOCATION

***11B*-608.6 Shower spray unit and water.** A shower spray unit with a hose 59 inches (*1499* mm) long minimum that can be used both as a fixed-position shower head and as a hand-held shower shall be provided. The shower spray unit shall have an on/off control with a non-positive shut-off. If an adjustable-height shower head on a vertical bar is used, the bar shall be installed so as not to obstruct the use of grab bars. Shower spray units shall deliver water that is 120°F (49°C) maximum.

Exception: *Where subject to excessive vandalism, two fixed shower heads shall be permitted instead of a hand-held spray unit in facilities that are not medical care facilities, long-term care facilities, transient lodging guest rooms, or residential dwelling units. Each shower head shall be installed so it can be operated independently of the other and shall have swivel angle adjustments, both vertically and horizontally. One shower head shall be located at a height of 48 inches (1219 mm) maximum above the shower finish floor.*

***11B*-608.7 Thresholds.** Thresholds in roll-in type shower compartments shall be $^1/_2$ inch (*12.7* mm) high maximum in accordance with *Section 11B*-303.

Exception: ***Reserved.***

***11B*-608.8 Shower enclosures.** Enclosures for shower compartments shall not obstruct controls, faucets, and shower spray units or obstruct transfer from wheelchairs onto shower seats.

11B-608.9 Shower floor or ground surface. *Floor or ground surfaces of showers shall comply with Section 11B-302.1 and shall be sloped 1:48 maximum in any direction. Where drains are provided, grate openings shall be $^1/_4$ inch (6.4 mm) maximum and flush with the floor surface.*

11B-608.10 Soap dish. *Where a soap dish is provided, it shall be located on the control wall at 40 inches (1016 mm) maximum above the shower floor, and within the reach limits from the seat.*

***11B*-609 Grab bars**

***11B*-609.1 General.** Grab bars in toilet facilities and bathing facilities shall comply with *Section 11B*-609.

***11B*-609.2 Cross section.** Grab bars shall have a cross section complying with *Section 11B*-609.2.1 or *11B*-609.2.2.

***11B*-609.2.1 Circular cross section.** Grab bars with circular cross sections shall have an outside diameter of $1^1/_4$ inches (32 mm) minimum and 2 inches (51 mm) maximum.

***11B*-609.2.2 Non-circular cross section.** Grab bars with non-circular cross sections shall have a cross-section dimension of 2 inches (51 mm) maximum and a perimeter dimension of 4 inches (*102* mm) minimum and 4.8 inches (*122* mm) maximum.

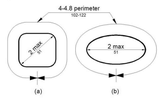

FIGURE *11B*-609.2.2
GRAB BAR NON-CIRCULAR CROSS SECTION

***11B*-609.3 Spacing.** The space between the wall and the grab bar shall be $1^1/_2$ inches (38 mm). The space between the grab bar and projecting objects below and at the ends shall be $1^1/_2$ inches (38 mm) minimum. The space between the grab bar and projecting objects above shall be 12 inches (305 mm) minimum.

Exceptions:

1. The space between the grab bars and shower controls, shower fittings, and other grab bars above shall be permitted to be $1^1/_2$ inches (38 mm) minimum.
2. *For L-shaped or U-shaped grab bars complying with Section 11B-609.9 the space between the walls and the grab bar shall be $1^1/_2$ inches (38 mm) minimum for a distance of 6 inches on either side of the inside corner between two adjacent wall surfaces.*

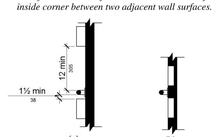

FIGURE *11B*-609.3
SPACING OF GRAB BARS

***11B*-609.4 Position of grab bars.** Grab bars shall be installed in a horizontal position, 33 inches (*838* mm) minimum and 36 inches (*914* mm) maximum above the finish floor measured to the top of the gripping surface, except that at water closets for children's use complying with *Section 11B*-*604.9*, grab bars shall be installed in a horizontal position 18 inches (*457* mm) minimum and 27 inches (*686* mm) maximum above the finish floor measured to the top of the gripping surface. The height of the lower grab bar on the back wall of a bathtub shall comply with *Section 11B*-607.4.1.1 or *11B*-607.4.2.1.

***11B*-609.5 Surface hazards.** Grab bars and any wall or other surfaces adjacent to grab bars shall be free of sharp or abrasive elements and shall have rounded edges.

***11B*-609.6 Fittings.** Grab bars shall not rotate within their fittings.

***11B*-609.7 Installation.** Grab bars shall be installed in any manner that provides a gripping surface at the specified locations and that does not obstruct the required clear floor space.

***11B*-609.8 Structural strength.** Allowable stresses shall not be exceeded for materials used when a vertical or horizontal force of 250 pounds (1112 N) is applied at any point on the grab bar, fastener, mounting device, or supporting structure.

11B-609.9 Alternate configuration. *L-shaped or U-shaped grab bars shall be permitted.*

***11B*-610 Seats**

***11B*-610.1 General.** Seats in bathtubs and shower compartments shall comply with *Section 11B*-610.

***11B*-610.2 Bathtub seats.** The top of bathtub seats shall be 17 inches (*432* mm) minimum and 19 inches (*483* mm) maximum above the bathroom finish floor. The depth of a removable in-tub seat shall be 15 inches (*381* mm) minimum and 16 inches (*406* mm) maximum. The seat shall be capable of secure placement. Permanent seats at the head end of the bathtub shall be 15 inches (*381* mm) deep minimum and shall extend from the back wall to or beyond the outer edge of the bathtub.

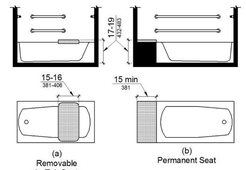

FIGURE *11B*-610.2
BATHTUB SEATS

***11B*-610.3 Shower compartment seats.** *A seat* in a standard roll-in shower compartment shall be a folding type, shall be installed on the side wall adjacent to the controls, and shall extend from the back wall to a point within 3 inches (*76* mm) of the compartment entry. *A seat* in an alternate roll-in type shower compartment shall be a folding type, shall be installed on the front wall opposite the back wall, and shall extend from the adjacent side wall to a point within 3 inches (*76* mm) of the compartment entry. The top of the seat shall be 17 inches (*432* mm) minimum and 19 inches (*483* mm) maximum above the bathroom finish floor. *When folded, the seat shall extend 6 inches (152 mm) maximum from the mounting wall.* Seats shall comply with *Section 11B*-610.3.1 or *11B*-610.3.2.

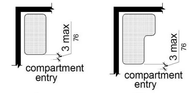

FIGURE *11B*-610.3.2
L-SHAPED SHOWER SEAT

***11B*-610.3.1 Rectangular seats.** The rear edge of a rectangular seat shall be $2^1/_2$ inches (64 mm) maximum and the front edge 15 inches (*381* mm) minimum and 16 inches (*406* mm) maximum from the seat wall. The side edge of the seat shall be $1^1/_2$ inches (38 mm) maximum from the adjacent wall.

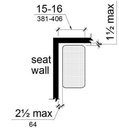

FIGURE *11B*-610.3.1
RECTANGULAR SHOWER SEAT

***11B*-610.3.2 L-shaped seats.** The rear edge of an L-shaped seat shall be $2^1/_2$ inches (64 mm) maximum and the front edge 15 inches (*381* mm) minimum and 16 inches (*406* mm) maximum from the seat wall. The rear edge of the "L" portion of the seat shall be $1^1/_2$ inches (38 mm) maximum from the wall and the front edge shall be 14 inches (*356* mm) minimum and 15 inches (*381* mm) maximum from the wall. The end of the "L" shall be 22 inches (*559* mm) minimum and 23 inches (*584* mm) maximum from the main seat wall.

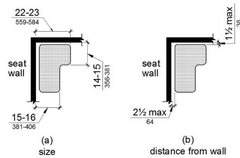

FIGURE *11B*-610.3.2
L-SHAPED SHOWER SEAT

***11B*-610.4 Structural strength.** Allowable stresses shall not be exceeded for materials used when a vertical or horizontal force of 250 pounds (1112 N) is applied at any point on the seat, fastener, mounting device, or supporting structure.

***11B*-611 Washing machines and clothes dryers**

***11B*-611.1 General.** Washing machines and clothes dryers shall comply with *Section 11B*-611.

***11B*-611.2 Clear floor space.** A clear floor or ground space complying with *Section 11B*-305 positioned for parallel approach shall be provided. The clear floor or ground space shall be centered on the appliance.

***11B*-611.3 Operable parts.** Operable parts, including doors, lint screens, and detergent and bleach compartments shall comply with *Section 11B-309*.

***11B*-611.4 Height.** Top loading machines shall have the door to the laundry compartment located 36 inches (*914* mm) maximum above the finish floor. Front loading machines shall have the bottom of the opening to the laundry compartment located 15 inches (*381* mm) minimum and 36 inches (*914* mm) maximum above the finish floor.

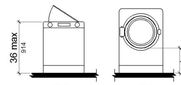

FIGURE *11B*-611.4
HEIGHT OF LAUNDRY COMPARTMENT OPENING

***11B*-612 Saunas and steam rooms**

***11B*-612.1 General.** Saunas and steam rooms shall comply with *Section 11B*-612.

***11B*-612.2 Bench.** Where seating is provided in saunas and steam rooms, at least one bench shall comply with *Section 11B*-903. Doors shall not swing into the clear floor space required by *Section 11B*-903.2.

Exception: A readily removable bench shall be permitted to obstruct the turning space required by *Section 11B*-612.3 and the clear floor or ground space required by *Section 11B*-903.2.

***11B*-612.3 Turning space.** A turning space complying with *Section 11B*-304 shall be provided within saunas and steam rooms.

BUREAU OF ENGINEERING
OFFICIAL RECORD

DIVISION 7: COMMUNICATION ELEMENTS AND FEATURES

***11B*-701 General**

***11B*-701.1 Scope.** The provisions of *Division* 7 shall apply where required by *Division* 2 or where referenced by a requirement in this *chapter*.

***11B*-702 Fire alarm systems**

***11B*-702.1 General.** Fire alarm systems shall have permanently installed audible and visible alarms complying with NFPA 72 *and Chapter 9, Sections 907.5.2.1 and 907.5.2.3*.

Exception: ***Reserved.***

***11B*-703 Signs**

***11B*-703.1 General.** Signs shall comply with *Section 11B*-703. Where both visual and tactile characters are required, either one sign with both visual and tactile characters, or two separate signs, one with visual, and one with tactile characters, shall be provided.

11B-703.1.1 Plan review and inspection. *Signs as specified in Section 11B-703, or in other sections of this code, when included in the construction of new buildings or facilities, or when included, altered or replaced due to additions, alterations or renovations to existing buildings or facilities, and when a permit is required, shall comply with Sections 11B-703.1.1.1 and 11B-703.1.1.2.*

11B-703.1.1.1 Plan review. *Plans, specifications or other information indicating compliance with these regulations shall be submitted to the enforcing agency for review and approval.*

11B-703.1.1.2 Inspection. *Signs and identification devices shall be field inspected after installation and approved by the enforcing agency prior to the issuance of a final certificate of occupancy per Chapter 1, Division II, Section 111, or final approval where no certificate of occupancy is issued. The inspection shall include, but not be limited to, verification that Braille dots and cells are properly spaced and the size, proportion and type of raised characters are in compliance with these regulations.*

***11B*-703.2 Raised characters.** Raised characters shall comply with *Section 11B*-703.2 and shall be duplicated in Braille complying with *Section 11B*-703.3. Raised characters shall be installed in accordance with *Section 11B*-703.4.

***11B*-703.2.1 Depth.** Raised characters shall be $^1/_{32}$ inch (0.8 mm) minimum above their background.

***11B*-703.2.2 Case.** Characters shall be uppercase.

***11B*-703.2.3 Style.** Characters shall be sans serif. Characters shall not be italic, oblique, script, highly decorative, or of other unusual forms.

***11B*-703.2.4 Character proportions.** Characters shall be selected from fonts where the width of the uppercase letter "O" is *60* percent minimum and 110 percent maximum of the height of the uppercase letter "I".

***11B*-703.2.5 Character height.** Character height measured vertically from the baseline of the character shall be $^5/_8$ inch (*15.9* mm) minimum and 2 inches (51 mm) maximum based on the height of the uppercase letter "I".

Exception: ***Reserved.***

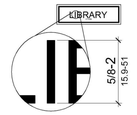

FIGURE *11B*-703.2.5
HEIGHT OF RAISED CHARACTERS

***11B*-703.2.6 Stroke thickness.** Stroke thickness of the uppercase letter "I" shall be 15 percent maximum of the height of the character.

***11B*-703.2.7 Character spacing.** Character spacing shall be measured between the two closest points of adjacent raised characters within a message, excluding word spaces. Where characters have rectangular cross sections, spacing between individual raised characters shall be $^1/_{16}$ inch (1.6 mm) minimum and 4 times the raised character stroke width maximum at the base of the cross sections, and $^1/_4$ inch (3.2 mm) minimum and 4 times the raised character stroke width maximum at the top of the cross sections. Characters shall be separated from raised borders and decorative elements $^3/_8$ inch (9.5 mm) minimum.

***11B*-703.2.8 Line spacing.** Spacing between the baselines of separate lines of raised characters within a message shall be 135 percent minimum and 170 percent maximum of the raised character height.

11B-703.2.9 Format. *Text shall be in a horizontal format.*

***11B*-703.3 Braille.** Braille shall be contracted (Grade 2) and shall comply with *Sections 11B*-703.3 and *11B*-703.4.

***11B*-703.3.1 Dimensions and capitalization.** Braille dots shall have a domed or rounded shape and shall comply with Table *11B*-703.3.1. The indication of an uppercase letter or letters shall only be used before the first word of sentences, proper nouns and names, individual letters of the alphabet, initials, and acronyms.

TABLE *11B*-703.3.1
BRAILLE DIMENSIONS

MEASUREMENT RANGE	MINIMUM IN INCHES MAXIMUM IN INCHES
Dot base diameter	0.059 (1.5 mm) to 0.063 (1.6 mm)
Distance between two dots in the same cell[1]	*0.100 (2.5 mm)*
Distance between corresponding dots in adjacent cells[1]	*0.300 (7.6 mm)*
Dot height	0.025 (0.6 mm) to 0.037 (0.9 mm)
Distance between corresponding dots from one cell directly below[1]	0.395 (10 mm) to 0.400 (10.2 mm)

1. Measured center to center.

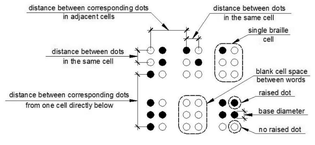

FIGURE *11B*-703.3.1
BRAILLE MEASUREMENT

***11B*-703.3.2 Position.** Braille shall be positioned below the corresponding text *in a horizontal format, flush left or centered*. If text is multi-lined, Braille shall be placed below the entire text. Braille shall be separated $^3/_8$ inch (9.5 mm) minimum *and $^1/_2$ inch (12.7 mm) maximum* from any other tactile characters and 3/8 inch (9.5 mm) minimum from raised borders and decorative elements.

Exception: Braille provided on elevator car controls shall be separated $^3/_{16}$ inch (4.8 mm) minimum and shall be located directly below the corresponding raised characters or symbols.

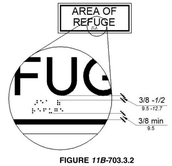

FIGURE *11B*-703.3.2
POSITION OF BRAILLE

***11B*-703.4 Installation height and location.** Signs with tactile characters shall comply with *Section 11B*-703.4.

***11B*-703.4.1 Height above finish floor or ground.** Tactile characters on signs shall be located 48 inches (*1219* mm) minimum above the finish floor or ground surface, measured from the baseline of the lowest *Braille cells* and 60 inches (*1524* mm) maximum above the finish floor or ground surface, measured from the baseline of the highest *line of raised characters*.

Exception: Tactile characters for elevator car controls shall not be required to comply with *Section 11B*-703.4.1.

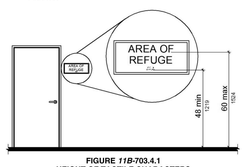

FIGURE *11B*-703.4.1
HEIGHT OF TACTILE CHARACTERS
ABOVE FINISH FLOOR OR GROUND

***11B*-703.4.2 Location.** Where a tactile sign is provided at a door, the sign shall be located alongside the door at the latch side. Where a tactile sign is provided at double doors with one active leaf, the sign shall be located on the inactive leaf. Where a tactile sign is provided at double doors with two active leafs, the sign shall be located to the right of the right hand door. Where there is no wall space at the latch side of a single door or at the right side of double doors, signs shall be located on the nearest adjacent wall. Signs containing tactile characters shall be located so that a clear floor space of 18 inches (*457* mm) minimum by 18 inches (*457* mm) minimum, centered on the tactile characters, is provided beyond the arc of any door swing between the closed position and 45 degree open position. *Where provided, signs identifying permanent rooms and spaces shall be located at the entrance to, and outside of the room or space. Where provided, signs identifying exits shall be located at the exit door when approached in the direction of egress travel.*

Exception: *In alterations where sign installation locations identified in Section 11B-703.4.2 are obstructed or otherwise unavailable for sign installation, signs with tactile characters shall be permitted on the push side of doors with closers and without hold-open devices.*

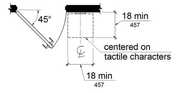

FIGURE *11B*-703.4.2
LOCATION OF TACTILE SIGNS AT DOORS

***11B*-703.5 Visual characters.** Visual characters shall comply with *Section 11B*-703.5.

Exception: Where visual characters comply with *Section 11B*-703.2 and are accompanied by Braille complying with *Section 11B*-703.3, they shall not be required to comply with *Sections 11B*-703.5.2 through *11B-703.5.6, 11B-703.5.8 and 11B-703.5.9*.

***11B*-703.5.1 Finish and contrast.** Characters and their background shall have a non-glare finish. Characters shall contrast with their background with either light characters on a dark background or dark characters on a light background.

***11B*-703.5.2 Case.** Characters shall be uppercase or lowercase or a combination of both.

***11B*-703.5.3 Style.** Characters shall be conventional in form. Characters shall not be italic, oblique, script, highly decorative, or of other unusual forms.

***11B*-703.5.4 Character proportions.** Characters shall be selected from fonts where the width of the uppercase letter "O" is *60* percent minimum and 110 percent maximum of the height of the uppercase letter "I".

***11B*-703.5.5 Character height.** Minimum character height shall comply with Table *11B*-703.5.5. Viewing distance shall be measured as the horizontal distance between the character and an obstruction preventing further approach towards the sign. Character height shall be based on the uppercase letter "I".

Exception: *Where provided, floor plans providing emergency procedures information in accordance with Title 19 shall not be required to comply with Section 11B-703.5.5.*

***11B*-703.5.6 Height from finish floor or ground.** Visual characters shall be 40 inches (*1016* mm) minimum above the finish floor or ground.

Exceptions:

1. Visual characters indicating elevator car controls shall not be required to comply with *Section 11B*-703.5.6.

TABLE *11B*-703.5.5
VISUAL CHARACTER HEIGHT

HEIGHT TO FINISH FLOOR OR GROUND FROM BASELINE OF CHARACTER	HORIZONTAL VIEWING DISTANCE	MINIMUM CHARACTER HEIGHT
40 inches (*1016* mm) to less than or equal to 70 inches (*1778* mm)	less than 72 inches (*1829* mm)	$^5/_8$ inch (*15.9* mm)
	72 inches (*1829* mm) and greater	$^5/_8$ inch (*15.9* mm), plus $^1/_8$ inch (3.2 mm) per foot (305 mm) of viewing distance above 72 inches (*1829* mm)
Greater than 70 inches (*1778* mm) to less than or equal to 120 inches (*3048* mm)	less than 180 inches (*4572* mm)	2 inches (51 mm)
	180 inches (*4572* mm) and greater	2 inches (51 mm), plus $^1/_8$ inch (3.2 mm) per foot (305 mm) of viewing distance above 180 inches (*4572* mm)
greater than 120 inches (*3048* mm)	less than 21 feet (*6401* mm)	3 inches (*76* mm)
	21 feet (*6401* mm) and greater	3 inches (*76* mm), plus $^1/_8$ inch (3.2 mm) per foot (305 mm) of viewing distance above 21 feet (*6401* mm)

2. *Floor-level exit signs complying with Chapter 10, Section 1013.7 shall not be required to comply with Section 11B-703.5.6.*
3. *Where provided, floor plans providing emergency procedures information in accordance with Title 19 shall not be required to comply with Section 11B-703.5.6.*

***11B*-703.5.7 Stroke thickness.** Stroke thickness of the uppercase letter "I" shall be 10 percent minimum and *20* percent maximum of the height of the character.

***11B*-703.5.8 Character spacing.** Character spacing shall be measured between the two closest points of adjacent characters, excluding word spaces. Spacing between individual characters shall be 10 percent minimum and 35 percent maximum of character height.

***11B*-703.5.9 Line spacing.** Spacing between the baselines of separate lines of characters within a message shall be 135 percent minimum and 170 percent maximum of the character height.

11B-703.5.10 Format. *Text shall be in a horizontal format.*

***11B*-703.6 Pictograms.** Pictograms shall comply with *Section 11B*-703.6.

***11B*-703.6.1 Pictogram field.** Pictograms shall have a field height of 6 inches (*152* mm) minimum. Characters and Braille shall not be located in the pictogram field.

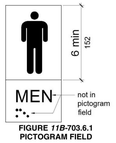

FIGURE *11B*-703.6.1
PICTOGRAM FIELD

***11B*-703.6.2 Finish and contrast.** Pictograms and their field shall have a non-glare finish. Pictograms shall contrast with their field with either a light pictogram on a dark field or a dark pictogram on a light field.

***11B*-703.6.3 Text descriptors.** Pictograms shall have text descriptors located directly below the pictogram field. Text descriptors shall comply with *Sections 11B*-703.2, *11B*-703.3 and *11B*-703.4.

***11B*-703.7 Symbols of accessibility.** Symbols of accessibility shall comply with *Section 11B*-703.7.

***11B*-703.7.1 Finish and contrast.** Symbols of accessibility and their background shall have a non-glare finish. Symbols of accessibility shall contrast with their background with either a light symbol on a dark background or a dark symbol on a light background.

***11B*-703.7.2 Symbols**

***11B*-703.7.2.1 International Symbol of Accessibility.** The International Symbol of Accessibility shall comply with Figure *11B*-703.7.2.1. *The symbol shall consist of a white figure on a blue background. The color blue shall approximate FS 15090 in Federal Standard 595C.*

Exceptions:

1. *The appropriate enforcement agency may approve other colors provided the symbol contrast is light on dark or dark on light.*
2. *On the accessibility function button on hall call consoles in a destination-oriented elevator system the International Symbol of Accessibility shall be a white symbol on a black background.*

FIGURE *11B*-703.7.2.1
INTERNATIONAL SYMBOL OF ACCESSIBILITY

***11B*-703.7.2.2 International Symbol of TTY.** The International Symbol of TTY shall comply with Figure *11B*-703.7.2.2.

FIGURE *11B*-703.7.2.2
INTERNATIONAL SYMBOL OF TTY

***11B*-703.7.2.3 Volume control telephones.** Telephones with a volume control shall be identified by a pictogram of a telephone handset with radiating sound waves on a square field such as shown in Figure *11B*-703.7.2.3.

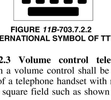

FIGURE *11B*-703.7.2.3
VOLUME CONTROL TELEPHONE

***11B*-703.7.2.4 Assistive listening systems.** Assistive listening systems shall be identified by the International Symbol of Access for Hearing Loss complying with Figure *11B*-703.7.2.4.

FIGURE *11B*-703.7.2.4
INTERNATIONAL SYMBOL OF ACCESS FOR HEARING LOSS

11B-703.7.2.5 Reserved.

11B-703.7.2.6 Toilet and bathing facilities geometric symbols. *Geometric symbols at entrances to toilet and bathing rooms shall be mounted at 58 inches (1473 mm) minimum and 60 inches (1524 mm) maximum above the finish floor or ground surface measured from the centerline of the symbol. Where a door is provided the symbol shall be mounted within 1 inch (25 mm) of the vertical centerline of the door.*

11B-703.7.2.6.1 Men's toilet and bathing facilities. *An equilateral triangle, $^1/_4$ inch (6.4 mm) thick with edges 12 inches (305 mm) long and a vertex pointing upward, shall be located at entrances to men's toilet and bathing facilities. The triangle symbol shall contrast with the door, either light on a dark background or dark on a light background.*

Exception: *Within secure perimeter of detention and correctional facilities, geometric symbols shall not be required to be $^1/_4$ inch (6.4 mm) thick.*

11B-703.7.2.6.2 Women's toilet and bathing facilities. *A circle, $^1/_4$ inch (6.4 mm) thick and 12 inches (305 mm) in diameter, shall be located at entrances to women's toilet and bathing facilities. The circle symbol shall contrast with the door, either light on a dark background or dark on a light background.*

Exception: *Within secure perimeter of detention and correctional facilities, geometric symbols shall not be required to be $^1/_4$ inch (6.4 mm) thick.*

11B-703.7.2.6.3 Unisex toilet and bathing facilities. *A circle, $^1/_4$ inch (6.4 mm) thick and 12 inches (305 mm) in diameter with a $^1/_4$ inch (6.4 mm) thick triangle with a vertex pointing upward, superimposed on and geometrically inscribed within the circle and within the 12-inch (305 mm) diameter, shall be provided at entrances to unisex toilet and bathing facilities. The vertices of the triangle shall be located $^1/_4$ inch (6.4 mm) maximum from the edge of the circle. The triangle symbol shall contrast with the circle symbol, either light on a dark background or dark on a light background. The circle symbol shall contrast with the door, either light on a dark background or dark on a light background.*

Exception: *Within secure perimeter of detention and correctional facilities, geometric symbols shall not be required to be $^1/_4$ inch (6.4 mm) thick.*

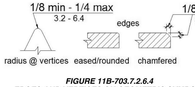

FIGURE *11B*-703.7.2.6.4
EDGES AND VERTICES ON GEOMETRIC SYMBOLS

11B-703.7.2.7 Pedestrian traffic-control buttons. *Pole-supported pedestrian traffic-control buttons shall be identified with color coding consisting of a textured horizontal yellow band 2 inches (51 mm) in width encircling the pole, and a 1-inch-wide (25 mm) dark border band above and below this yellow band. Color coding shall be placed immediately above the control button. Control buttons shall be located no higher than 48 inches (1219 mm) above the ground surface adjacent to the pole.*

11B-703.8 Variable message signs.

11B-703.8.1 General. *High resolution variable message sign (VMS) characters shall comply with Sections 11B-703.5 and 11B-703.8.12 through 11B-703.8.14. Low resolution variable message sign (VMS) characters shall comply with Section 11B-703.8.*

11B-703.8.2 Case. *Low resolution VMS characters shall be uppercase.*

11B-703.8.3 Style. *Low resolution VMS characters shall be conventional in form, shall be sans serif, and shall not be italic, oblique, script, highly decorative, or of other unusual forms.*

11B-703.8.4 Character height. *The uppercase letter "I" shall be used to determine the allowable height of all low resolution VMS characters of a font. Viewing distance shall be measured as the horizontal distance between the character and an obstruction preventing further approach towards the sign. The uppercase letter "I" of the font shall have a minimum height complying with Table 11B-703.8.4.*

Exception: *In assembly seating where the maximum viewing distance is 100 feet (30.5 m) or greater, the height of the uppercase "I" of low resolution VMS fonts shall be permitted to be 1 inch (25 mm) for every 30 feet (9144 mm) of viewing distance, provided the*

THE CITY OF LOS ANGELES OR ITS OFFICERS OR AGENTS SHALL NOT BE RESPONSIBLE FOR THE ACCURACY OR COMPLETENESS OF ELECTRONIC COPIES OF THIS PLAN SHEET.
FILE PATH: A360://Studio City Recreation Center/SCRC-Project Model_Central_Final.rvt
SHEET ISSUE DATE: 01/01/14
REVISION DATES: (DESIGN STAGE ONLY)

ENGINEERING
CITY OF LOS ANGELES

NO.	REVISION DESCRIPTION	DATE	BY

BUILDING NO. -
INDEX NO. RP-300106

DEPARTMENT OF PUBLIC WORKS
BUREAU OF ENGINEERING

CITY ENGINEER	TED ALLEN, PE	DATE:	1-24-2019
ARCHITECTURAL DIVISION	LIC. NO.: C 23333		1-24-2019
ARCHITECT: ROBERT LOMELIN			1-24-2019
DESIGNED BY:	Z. AKHTER, M. CHAVARRIA, A. KIM, M. LAM		1-24-2019
DRAWN BY:	Z. AKHTER, M. CHAVARRIA, A KIM		1-24-2019
CHECKED BY:	ROBERT LOMELIN		1-24-2019
APPROVED BY:	MAHMOOD KARIMZADEH, AIA, DEPUTY CITY ENGINEER		1-24-2019

CLIENT: DEPARTMENT OF RECREATION AND PARKS
GENERAL MANAGER: MICHAEL A. SHULL

SHEET TITLE: TITLE 24- DISABLED ACCESS REQUIREMENTS

PROJECT: STUDIO CITY RECREATION CENTER

ADDRESS: 12621 RYE STREET, STUDIO CITY, CA 91604

CITY OF LOS ANGELES

WORK ORDER NO. E170267B
PLAN FILE NO. 860
DRAWING NO. G111
SHEET 19 OF SHEETS 211

PLOTTED:7/1/2019 11:35:09 AM

character height is 8 inches (203 mm) minimum. Viewing distance shall be measured as the horizontal distance between the character and where someone is expected to view the sign.

11B-703.8.5 Character width. *The uppercase letter "O" shall be used to determine the allowable width of all low resolution VMS characters of a font. Low resolution VMS characters shall comply with the pixel count for character width in Table 11B-703.8.5.*

11B-703.8.6 Stroke width. *The uppercase letter "I" shall be used to determine the allowable stroke width of all low resolution VMS characters of a font. Low resolution VMS characters shall comply with the pixel count for stroke width in Table 11B-703.8.5.*

11B-703.8.7 Character spacing. *Spacing shall be measured between the two closest points of adjacent low resolution VMS characters within a message, excluding word spaces. Low resolution VMS character spacing shall comply with the pixel count for character spacing in Table 11B-703.8.5.*

11B-703.8.8 Line spacing. *Low resolution VMS characters shall comply with Section 11B-703.5.9.*

TABLE 11B-703.8.5
PIXEL COUNT FOR LOW RESOLUTION VMS

CHARACTER HEIGHT	CHARACTER WIDTH RANGE	STROKE WIDTH RANGE	CHARACTER SPACING RANGE
7	5-6	1	2
8	6-7	1-2	2-3
9	6-8	1-2	2-3
10	7-9	2	2-4
11	8-10	2	2-4
12	8-11	2	3-4
13	9-12	2-3	3-5
14	10-13	2-3	3-5
15	11-14	2-3	3-5

11B-703.8.9 Height above floor. *Low resolution VMS characters shall be 40 inches (1016 mm) minimum above the floor of the viewing position, measured to the baseline of the character. Heights of low resolution variable message sign characters shall comply with Table 11B-703.8.4, based on the size of the characters on the sign.*

TABLE 11B-703.8.4
LOW RESOLUTION VMS CHARACTER HEIGHT

HEIGHT ABOVE FLOOR TO BASELINE OF CHARACTER	HORIZONTAL VIEWING DISTANCE	MINIMUM CHARACTER HEIGHT
40 inches (1016 mm) to less than or equal to 70 inches (1778 mm)	Less than 10 feet (3048 mm)	2 inches (51 mm)
	10 feet (3048 mm) and greater	2 inches (51 mm), plus $^1/_4$ inch (5.1 mm) per foot (305 mm) of viewing distance above 10 feet (3048 mm)
Greater than 70 inches (1778 mm) to less than or equal to 120 inches (3048 mm)	Less than 15 feet (4572 mm)	3 inches (76 mm)
	15 feet (4572 mm) and greater	3 inches (76 mm), plus $^1/_4$ inch (5.1 mm) per foot (305 mm) of viewing distance above 15 feet (4572 mm)
Greater than 120 inches (3048 mm)	Less than 20 feet (6096 mm)	4 inches (102 mm)
	20 feet (6096 mm) and greater	4 inches (102 mm), plus $^1/_4$ inch (5.1 mm) per foot (305 mm) of viewing distance above 20 feet (6096 mm)

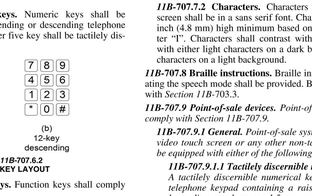

	Property	Example 1	Example 2
a	Character Height	14 Pixels	7 Pixels
b	Stroke Width	2 Pixels	1 Pixels
c	Character Spacing	3 Pixels	2 Pixels
d	Line Spacing		4 Pixels

FIGURE 11B-703.8.5
LOW RESOLUTION VMS CHARACTERS

11B-703.8.10 Finish. *The background of low resolution VMS characters shall have a nonglare finish.*

11B-703.8.11 Contrast. *Low resolution VMS characters shall be light characters on a dark background.*

11B-703.8.12 Protective covering. *Where a protective layer is placed over VMS characters through which the VMS characters must be viewed, the protective covering shall have a nonglare finish.*

11B-703.8.13 Brightness. *The brightness of variable message signs in exterior locations shall automatically adjust in response to change in ambient light levels.*

11B-703.8.14 Rate of change. *Where a VMS message can be displayed in its entirety on a single screen, it shall be displayed on a single screen and shall remain motionless on the screen for a minimum 3 seconds or 1 second minimum for every seven characters of the message including spaces, whichever is longer.*

11B-704 Telephones

11B-704.1 General. Public telephones shall comply with *Section 11B-704*.

11B-704.2 Wheelchair accessible telephones. Wheelchair accessible telephones shall comply with *Section 11B-704.2*.

11B-704.2.1 Clear floor or ground space. A clear floor or ground space complying with *Section 11B-305* shall be provided. The clear floor or ground space shall not be obstructed by bases, enclosures, or seats.

11B-704.2.1.1 Parallel approach. Where a parallel approach is provided, the distance from the edge of the telephone enclosure to the face of the telephone unit shall be 10 inches (*254* mm) maximum.

FIGURE *11B-704.2.1.1*
PARALLEL APPROACH TO TELEPHONE

11B-704.2.1.2 Forward approach. *Where a forward approach is provided at a telephone within an enclosure, the counter may extend beyond the face of the telephone 20 inches (508 mm) into the required clear floor or ground space and the enclosure may extend beyond the face of the telephone 24 inches (610 mm). If an additional 6 inches (152 mm) in width of clear floor space is provided, creating a clear floor space of 36 inches by 48 inches (914 mm by 1219 mm), the enclosure may extend more than 24 inches (610 mm) beyond the face of the telephone.*

11B-704.2.2 Operable parts. Operable parts shall comply with *Section 11B-309*. Telephones shall have push-button controls where such service is available.

11B-704.2.3 Telephone directories. Telephone directories, where provided, shall be located in accordance with *Section 11B-309*.

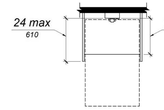

FIGURE *11B-704.2.1.2*
FORWARD APPROACH TO TELEPHONE

11B-704.2.4 Cord length. The cord from the telephone to the handset shall be 29 inches (*737* mm) long minimum.

11B-704.3 Volume control telephones. Public telephones required to have volume controls shall be equipped with a receive volume control that provides a gain adjustable up to 20 dB minimum. For incremental volume control, provide at least one intermediate step of 12 dB of gain minimum. An automatic reset shall be provided. *Volume control telephones shall be equipped with a receiver that generates a magnetic field in the area of the receiver cap. Public telephones with volume control shall be hearing aid compatible.*

11B-704.4 TTYs. TTYs *provided* at a public pay telephone shall be permanently affixed within, or adjacent to, the telephone enclosure. Where an acoustic coupler is used, the telephone cord shall be sufficiently long to allow connection of the TTY and the telephone receiver.

11B-704.4.1 Height. When in use, the touch surface of TTY keypads shall be 34 inches (*864* mm) minimum above the finish floor.

Exception: Where seats are provided, TTYs shall not be required to comply with *Section 11B-704.4.1*.

11B-704.5 TTY shelf. Public pay telephones required to accommodate portable TTYs shall be equipped with a shelf and an electrical outlet within or adjacent to the telephone enclosure. The telephone handset shall be capable of being placed flush on the surface of the shelf. The shelf shall be capable of accommodating a TTY and shall have 6 inches (*152* mm) minimum vertical clearance above the area where the TTY is to be placed.

11B-705 Detectable warnings and detectable directional texture

11B-705.1 Detectable warnings

***11B-705.1.1* General.** Detectable warnings shall consist of a surface of truncated domes and shall comply with *Section 11B-705*.

***11B-705.1.1.1* Dome size.** Truncated domes in a detectable warning surface shall have a base diameter of 0.9 inch (*22.9 mm*) minimum and *0.92 inch (23.4 mm)* maximum, a top diameter of *0.45 inch (11.4 mm) minimum and 0.47 inch (11.9 mm) maximum*, and a height of *0.2 inch (5.1 mm)*.

***11B-705.1.1.2* Dome spacing.** Truncated domes in a detectable warning surface shall have a center-to-center spacing of *2.3 inches (58 mm)* minimum and 2.4 inches (61 mm) maximum, and a base-to-base spacing of 0.65 inch (*16.5* mm) minimum, measured between the most adjacent domes on a square grid.

Exception: *Where installed in a radial pattern, truncated domes shall have a center-to-center spacing of 1.6 inches (41 mm) minimum to 2.4 inches (61 mm) maximum.*

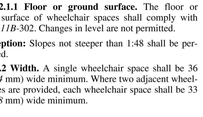

FIGURE *11B-705.1*
SIZE AND SPACING OF TRUNCATED DOMES

***11B-705.1.1.3 Color and* contrast.** *Detectable warning surfaces at transit boarding platform edges, bus stops, hazardous vehicular areas, reflecting pools, and track crossings shall comply with Section 11B-705.1.1.3.1. Detectable warnings at other locations shall comply with either Section 11B-705.1.1.3.1 or Section 11B-705.1.1.3.2. The material used to provide visual contrast shall be an integral part of the surface.*

11B-705.1.1.3.1 *Detectable warning surfaces shall be yellow and approximate FS 33538 of Federal Standard 595C.*

11B-705.1.1.3.2 Detectable warning surfaces shall *provide a 70 percent minimum visual* contrast with adjacent walking surfaces. *Contrast in percent shall be determined by:*

Contrast percent = [(B1-B2)/B1] × 100 where

B1 = light reflectance value (LRV) of the lighter area and

B2 = light reflectance value (LRV) of the darker area.

Exception: *Where the detectable warning surface does not provide a 70 percent minimum contrast with adjacent walking surfaces, a 1-inch (25 mm) wide minimum visually contrasting surface shall separate the detectable warning from adjacent walking surfaces. The visually contrasting surface shall contrast with both the detectable warning and adjacent walking surfaces either light-on-dark, or dark-on-light.*

11B-705.1.1.4 Resiliency. *Detectable warning surfaces shall differ from adjoining surfaces in resiliency or sound-on-cane contact.*

Exception: *Detectable warning surfaces at curb ramps, islands or cut-through medians shall not be required to comply with Section 11B-705.1.1.4.*

11B-705.1.2 Locations. *Detectable warnings at the following locations shall comply with Section 11B-705.1.*

***11B-705.1.2.1* Platform edges.** Detectable warning surfaces at platform boarding edges shall be 24 inches (610 mm) wide and shall extend the full length of the public use areas of the platform.

11B-705.1.2.2 Curb ramps. *Detectable warnings at curb ramps shall extend 36 inches (914 mm) in the direction of travel. Detectable warnings shall extend the full width of the ramp run less 2 inches (51 mm) maximum on each side, excluding any flared sides. Detectable warnings shall be located so the edge nearest the curb is 6 inches (152 mm) minimum and 8 inches (203 mm) maximum from the line at the face of the curb marking the transition between the curb and the gutter, street or highway.*

Exception: *On parallel curb ramps, detectable warnings shall be placed on the turning space at the flush transition between the street and sidewalk. Detectable warnings shall extend the full width of the turning space at the flush transition between the street and the sidewalk less 2 inches (51 mm) maximum on each side.*

11B-705.1.2.3 Islands or cut-through medians. *Detectable warnings at pedestrian islands or cut-through medians shall be 36 inches (914 mm) minimum in depth extending the full width of the pedestrian path or cut-through less 2 inches (51 mm) maximum on each side, placed at the edges of the pedestrian island or cut-through median, and shall be separated by 24 inches (610 mm) minimum of walking surface without detectable warnings.*

Exception: *Detectable warnings shall be 24 inches (610 mm) minimum in depth at pedestrian islands or cut-through medians that are less than 96 inches (2438 mm) in length in the direction of pedestrian travel.*

11B-705.1.2.4 Bus stops. *When detectable warnings are provided at bus stop boarding and alighting areas, the detectable warnings shall extend the full width of the boarding/alighting area and shall be 36 inches (914 mm) minimum in depth.*

11B-705.1.2.5 Hazardous vehicular areas. *Detectable warnings at hazardous vehicular areas shall be 36 inches (914 mm) in width.*

11B-705.1.2.6 Reflecting pools. *When detectable warnings are provided at reflecting pools, it shall be 24 inches (610 mm) minimum and 36 inches (914 mm) maximum in width.*

11B-705.1.2.7 Track crossings. *Detectable warnings at track crossings shall be 36 inches (914 mm) in the direction of pedestrian travel and extend the full width of the circulation path.*

11B-705.2 Detectable directional texture. *Detectable directional texture at transit boarding platforms shall comply with Figure 11B-705.2 and shall be 0.1 inch (2.5 mm) in height that tapers off to 0.04 inch (1.0 mm), with bars raised 0.2 inch (5.1 mm) from the surface. The raised bars shall be 1.3 inches (33 mm) wide and 3 inches (76 mm) from center-to-center of each bar. This surface shall differ from adjoining walking surfaces in resiliency or sound-on-cane contact. The color shall be yellow and approximate FS 33538 of Federal Standard 595C. This surface will be placed directly behind the yellow detectable warning texture specified in Section 11B-705.1.2.1, aligning with all doors of the transit vehicles where passengers will embark. The width of the directional texture shall be equal to the width of the transit vehicle's door opening. The depth of the texture shall not be less than 36 inches (914 mm).*

FIGURE *11B-705.2*
DETECTABLE DIRECTIONAL TEXTURE

11B-705.3 Product approval. *Only approved DSA-AC detectable warning products and directional surfaces shall be installed as provided in the California Code of Regulations (CCR), Title 24, Part 1, Chapter 5, Articles 2, 3 and 4. Refer to CCR Title 24, Part 12, Chapter 11B, Section 12-11B.205 for building and facility access specifications for product approval for detectable warning products and directional surfaces.*

11B-706 Assistive listening systems

11B-706.1 General. Assistive listening systems required in assembly areas, *conference and meeting rooms* shall comply with *Section 11B-706*.

11B-706.2 Receiver jacks. Receivers required for use with an assistive listening system shall include a $^1/_8$ inch (3.2 mm) standard mono jack.

11B-706.3 Receiver hearing-aid compatibility. Receivers required to be hearing-aid compatible shall interface with telecoils in hearing aids through the provision of neckloops.

11B-706.4 Sound pressure level. Assistive listening systems shall be capable of providing a sound pressure level of 110 dB minimum and 118 dB maximum with a dynamic range on the volume control of 50 dB.

11B-706.5 Signal-to-noise ratio. The signal-to-noise ratio for internally generated noise in assistive listening systems shall be 18 dB minimum.

11B-706.6 Peak clipping level. Peak clipping shall not exceed 18 dB of clipping relative to the peaks of speech.

11B-707 Automatic teller machines, fare machines and point-of-sale devices

11B-707.1 General. Automatic teller machines, fare machines and point-of-sale devices shall comply with *Section 11B-707*.

11B-707.2 Clear floor or ground space. A clear floor or ground space complying with *Section 11B-305* shall be provided.

Exception: Clear floor or ground space shall not be required at drive-up only automatic teller machines and fare machines.

11B-707.3 Operable parts. Operable parts shall comply with *Section 11B-309*. Unless a clear or correct key is provided, each operable part shall be able to be differentiated by sound or touch, without activation.

Exceptions:

1. Drive-up only automatic teller machines and fare machines shall not be required to comply with *Sections 11B-309.2* and *11B-309.3*.
2. *Where automatic teller machines and fare machines do not require compliance with Section 11B-707.2, compliance with Sections 11B-309.2 and 11B-309.3 shall not be required.*
3. *Where point-of-sale devices do not require compliance with Section 11B-707.2, compliance with Sections 11B-309.2 and 11B-309.3 shall not be required.*

11B-707.4 Privacy. Automatic teller machines shall provide the opportunity for the same degree of privacy of input and output available to all individuals.

11B-707.5 Speech output. Machines shall be speech enabled. Operating instructions and orientation, visible transaction prompts, user input verification, error messages, and all displayed information for full use shall be accessible to and independently usable by individuals with vision impairments. Speech shall be delivered through a mechanism that is readily available to all users, including but not limited to, an industry standard connector or a telephone handset. Speech shall be recorded or digitized human, or synthesized.

Exceptions:

1. Audible tones shall be permitted instead of speech for visible output that is not displayed for security purposes, including but not limited to, asterisks representing personal identification numbers.
2. Advertisements and other similar information shall not be required to be audible unless they convey information that can be used in the transaction being conducted.
3. Where speech synthesis cannot be supported, dynamic alphabetic output shall not be required to be audible.

***11B-707.5.1* User control.** Speech shall be capable of being repeated or interrupted. Volume control shall be provided for the speech function.

Exception: Speech output for any single function shall be permitted to be automatically interrupted when a transaction is selected.

***11B-707.5.2* Receipts.** Where receipts are provided, speech output devices shall provide audible balance inquiry information, error messages, and all other information on the printed receipt necessary to complete or verify the transaction.

Exceptions:

1. Machine location, date and time of transaction, customer account number, and the machine identifier shall not be required to be audible.
2. Information on printed receipts that duplicates information available on-screen shall not be required to be presented in the form of an audible receipt.
3. Printed copies of bank statements and checks shall not be required to be audible.

***11B-707.6* Input.** Input devices shall comply with *Section 11B-707.6*.

***11B-707.6.1* Input controls.** At least one tactilely discernible input control shall be provided for each function. Where provided, key surfaces not on active areas of display screens, shall be raised above surrounding surfaces. Where membrane keys are the only method of input, each shall be tactilely discernible from surrounding surfaces and adjacent keys.

***11B-707.6.2* Numeric keys.** Numeric keys shall be arranged in a 12-key ascending or descending telephone keypad layout. The number five key shall be tactilely distinct from the other keys.

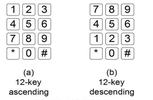

FIGURE *11B-707.6.2*
NUMERIC KEY LAYOUT

***11B-707.6.3* Function keys.** Function keys shall comply with *Section 11B-707.6.3*.

***11B-707.6.3.1* Contrast.** Function keys shall contrast visually from background surfaces. Characters and symbols on key surfaces shall contrast visually from key surfaces. Visual contrast shall be either light-on-dark or dark-on-light.

Exception: Tactile symbols required by *Section 11B-707.6.3.2* shall not be required to comply with *Section 11B-707.6.3.1*.

***11B-707.6.3.2* Tactile symbols.** Function key surfaces shall have tactile symbols as follows: Enter or Proceed key: raised circle; Clear or Correct key: raised left arrow; Cancel key: raised letter ex; Add Value key: raised plus sign; Decrease Value key: raised minus sign.

***11B-707.7* Display screen.** The display screen shall comply with *Section 11B-707.7*.

Exception: Drive-up only automatic teller machines and fare machines shall not be required to comply with *Section 11B-707.7.1*.

***11B-707.7.1* Visibility.** The display screen shall be visible from a point located 40 inches (*1016* mm) above the center of the clear floor space in front of the machine.

11B-707.7.1.1 Vertically mounted display screen. *Where display screens are mounted vertically or tipped away from the viewer less than 30 degrees, the center line of the display screen and other display devices shall be no more than 52 inches (1321 mm) above the floor or ground surface.*

11B-707.7.1.2 Angle-mounted display screen. *Where display screens are mounted tipped away from the viewer 30 degrees to less than 60 degrees from vertical, the center line of the display screen and other display devices shall be no more than 44 inches (1118 mm) above the floor or ground surface.*

11B-707.7.1.3 Horizontally mounted display screen. *Where display screens are mounted tipped away from the viewer 60 degrees to 90 degrees (horizontal) from vertical, the center line of the display screen and other display devices shall be no more than 34 inches (864 mm) above the floor or ground surface.*

***11B-707.7.2* Characters.** Characters displayed on the screen shall be in a sans serif font. Characters shall be $^3/_{16}$ inch (4.8 mm) high minimum based on the uppercase letter "I". Characters shall contrast with their background with either light characters on a dark background or dark characters on a light background.

***11B-707.8* Braille instructions.** Braille instructions for initiating the speech mode shall be provided. Braille shall comply with *Section 11B-703.3*.

11B-707.9 Point-of-sale devices. *Point-of-sale devices shall comply with Section 11B-707.9.*

11B-707.9.1 General. *Point-of-sale systems that include a video touch screen or any other non-tactile keypad shall be equipped with either of the following:*

11B-707.9.1.1 Tactilely discernible numerical keypad. *A tactilely discernible numerical keypad similar to a telephone keypad containing a raised dot with a dot base diameter between 1.5 mm and 1.6 mm and a height between 0.6 mm and 0.9 mm on the number 5 key that enables a visually impaired person to enter his or her own personal identification number or any other personal information necessary to process the transaction in a manner that provides the opportunity for the same degree of privacy input and output available to all individuals.*

11B-707.9.1.2 Other technology. *Other technology, such as a radio frequency identification device, fingerprint biometrics, or some other mechanism that enables a visually impaired person to access the video touch screen device with his or her personal identifier and to process his or her transaction in a manner that provides the opportunity for the same degree of privacy input and output available to all individuals. Where a video screen overlay is provided it shall be equipped with a tactilely discernible numerical keypad complying with Section 11B-707.9.1.1.*

11B-708 Two-way communication systems

11B-708.1 General. Two-way communication systems shall comply with *Section 11B-708*.

11B-708.2 Audible and visual indicators. The system shall provide both audible and visual signals.

11B-708.3 Handsets. Handset cords, if provided, shall be 29 inches (*737* mm) long minimum.

11B-708.4 Residential dwelling unit communication systems. Communications systems between a residential dwelling unit and a site, building, or floor entrance shall comply with *Section 11B-708.4*.

***11B-708.4.1* Common use or public use system interface.** The common use or public use system interface shall include the capability of supporting voice and TTY communication with the residential dwelling unit interface.

***11B-708.4.2* Residential dwelling unit interface.** The residential dwelling unit system interface shall include a telephone jack capable of supporting voice and TTY communication with the common use or public use system interface.

BUREAU OF ENGINEERING
OFFICIAL RECORD

DIVISION 8: SPECIAL ROOMS, SPACES, AND ELEMENTS

11B-801 General

11B-801.1 Scope. The provisions of *Division* 8 shall apply where required by *Division* 2 or where referenced by a requirement in this *chapter*.

11B-802 Wheelchair spaces, companion seats, and designated aisle seats and semi-ambulant seats

11B-802.1 Wheelchair spaces. Wheelchair spaces shall comply with *Section 11B-802.1*.

11B-802.1.1 Floor or ground surface. The floor or ground surface of wheelchair spaces shall comply with *Section 11B-302*. Changes in level are not permitted.

Exception: Slopes not steeper than 1:48 shall be permitted.

11B-802.1.2 Width. A single wheelchair space shall be 36 inches (*914* mm) wide minimum. Where two adjacent wheelchair spaces are provided, each wheelchair space shall be 33 inches (*838* mm) wide minimum.

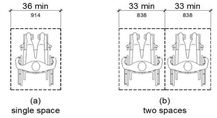

FIGURE *11B-802.1.2*
WIDTH OF WHEELCHAIR SPACES

11B-802.1.3 Depth. Where a wheelchair space can be entered from the front or rear, the wheelchair space shall be 48 inches (*1219* mm) deep minimum. Where a wheelchair space can be entered only from the side, the wheelchair space shall be 60 inches (*1524* mm) deep minimum.

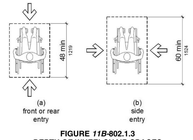

FIGURE *11B-802.1.3*
DEPTH OF WHEELCHAIR SPACES

11B-802.1.4 Approach. Wheelchair spaces shall adjoin accessible routes. Accessible routes shall not overlap wheelchair spaces.

11B-802.1.5 Overlap. Wheelchair spaces shall not overlap circulation paths.

11B-802.2 Lines of sight. Lines of sight to the screen, performance area, or playing field for spectators in wheelchair spaces shall comply with *Section 11B-802.2*.

11B-802.2.1 Lines of sight over seated spectators. Where spectators are expected to remain seated during events, spectators in wheelchair spaces shall be afforded lines of sight complying with *Section 11B-802.2.1*.

***11B-802.2.1.1* Lines of sight over heads.** Where spectators are provided lines of sight over the heads of spectators seated in the first row in front of their seats, spectators seated in wheelchair spaces shall be afforded lines of sight over the heads of seated spectators in the first row in front of wheelchair spaces.

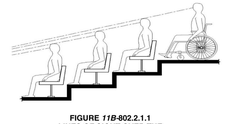

FIGURE *11B-802.2.1.1*
LINES OF SIGHT OVER THE HEADS OF SEATED SPECTATORS

***11B-802.2.1.2* Lines of sight between heads.** Where spectators are provided lines of sight over the shoulders and between the heads of spectators seated in the first row in front of their seats, spectators seated in wheelchair spaces shall be afforded lines of sight over the shoulders and between the heads of seated spectators in the first row in front of wheelchair spaces.

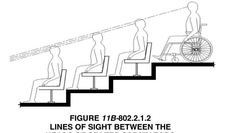

FIGURE *11B-802.2.1.2*
LINES OF SIGHT BETWEEN THE HEADS OF SEATED SPECTATORS

11B-802.2.2 Lines of sight over standing spectators. Where spectators are expected to stand during events, spectators in wheelchair spaces shall be afforded lines of sight complying with *Section 11B-802.2.2*.

11B-802.2.2.1 Lines of sight over heads. Where standing spectators are provided lines of sight over the heads of spectators standing in the first row in front of their seats, spectators seated in wheelchair spaces shall be afforded lines of sight over the heads of standing spectators in the first row in front of wheelchair spaces.

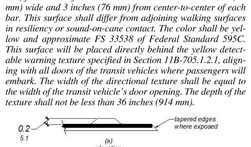

FIGURE *11B-802.2.2.1*
LINES OF SIGHT OVER THE HEADS OF STANDING SPECTATORS

11B-802.2.2.2 Lines of sight between heads. Where standing spectators are provided lines of sight over the shoulders and between the heads of spectators standing in the first row in front of their seats, spectators seated in wheelchair spaces shall be afforded lines of sight over the shoulders and between the heads of standing spectators in the first row in front of wheelchair spaces.

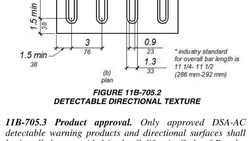

FIGURE *11B-802.2.2.2*
LINES OF SIGHT BETWEEN THE HEADS OF STANDING SPECTATORS

11B-802.3 Companion seats. Companion seats shall comply with *Section 11B-802.3*.

11B-802.3.1 Alignment. In row seating, companion seats shall be located to provide shoulder alignment with adjacent wheelchair spaces. The shoulder alignment point of the wheelchair space shall be measured 36 inches (*914* mm) from the front of the wheelchair space. The floor surface of the companion seat shall be at the same elevation as the floor surface of the wheelchair space.

11B-802.3.2 Type. Companion seats shall be equivalent in size, quality, comfort, and amenities to the seating in the immediate area. Companion seats shall be permitted to be movable.

11B-802.4 Designated aisle seats. Designated aisle seats shall comply with *Section 11B-802.4*.

11B-802.4.1 Armrests. Where armrests are provided on the seating in the immediate area, folding or retractable armrests shall be provided on the aisle side of the seat.

11B-802.4.2 Identification. Each designated aisle seat shall be identified by a sign or marker *with the International Symbol of Accessibility complying with Section 11B-703.7.2.1. Signs complying with Section 11B-703.5, notifying patrons of the availability of such seats shall be posted at the ticket office*.

11B-802.5 Semi-ambulant seats. *Semi-ambulant seats shall provide at least 24 inches (610 mm) clear leg space between the front of the seat to the nearest obstruction or to the back of the seat immediately in front.*

11B-803 Dressing, fitting, and locker rooms

11B-803.1 General. Dressing, fitting and locker rooms shall comply with *Section 11B-803*.

11B-803.2 Turning space. Turning space complying with *Section 11B-304* shall be provided within the room.

11B-803.3 Door swing. Doors shall not swing into the room unless a *turning* space complying with *Section 11B-304.3* is provided beyond the arc of the door swing.

11B-803.4 Benches. A bench complying with *Section 11B-903* shall be provided within the room.

11B-803.5 Coat hooks and shelves. Coat hooks provided within the room shall be located within one of the reach ranges specified in *Section 11B-308*. Shelves shall be 40 inches (*1016* mm) minimum and 48 inches (*1219* mm) maximum above the finish floor or ground. *Coat hooks shall not be located above the bench or other seating in the room.*

11B-803.6 Mirrors. *Mirrors shall be installed with the bottom edge of the reflecting surface 20 inches (508 mm) maximum above the finish floor or ground. Mirrors shall be full length with a reflective surface 18 inches (457 mm) wide minimum by 54 inches (1372 mm) high minimum and shall be mounted in a position affording a view to a person on the bench as well as to a person in a standing position.*

11B-804 Kitchens, kitchenettes, and wet bars.

11B-804.1 General. Kitchens, kitchenettes, *and wet bars* shall comply with *Section 11B-804*.

11B-804.2 Clearance. Where a pass through kitchen is provided, clearances shall comply with *Section 11B-804.2.1*. Where a U-shaped kitchen is provided, clearances shall comply with *Section 11B-804.2.2*.

Exception: Spaces that do not provide a cooktop or conventional range shall not be required to comply with *Section 11B-804.2*.

THE CITY OF LOS ANGELES OR ITS OFFICERS OR AGENTS SHALL NOT BE RESPONSIBLE FOR THE ACCURACY OR COMPLETENESS OF ELECTRONIC COPIES OF THIS PLAN SHEET.
FILE PATH: A360://Studio City Recreation Center/SCRC-Project Model_Central_Final.rvt
SHEET ISSUE DATE: 01/01/14
REVISION DATES: (DESIGN STAGE ONLY)
CITY OF LOS ANGELES DEPARTMENT OF PUBLIC WORKS
BUREAU OF ENGINEERING
CITY ENGINEER: TED ALLEN, PE
NO. | REVISION DESCRIPTION | DATE | BY
INDEX NO. | BUILDING NO. RP-300106 -
CITY OF LOS ANGELES
CLIENT: DEPARTMENT OF RECREATION AND PARKS
GENERAL MANAGER: MICHAEL A. SHULL
SHEET TITLE: TITLE 24- DISABLED ACCESS REQUIREMENTS
PROJECT: STUDIO CITY RECREATION CENTER
ADDRESS: 12621 RYE STREET, STUDIO CITY, CA 91604
CITY ENGINEER | DATE:
ARCHITECTURAL DIVISION
ARCHITECT: ROBERT LOMELIN LIC. NO.: C 23333
DESIGNED BY: Z. AKHTER, M. CHAVARRIA, A. KIM, M. LAM
DRAWN BY: Z. AKHTER, M. CHAVARRIA, A. KIM
CHECKED BY: ROBERT LOMELIN
APPROVED BY: MAHMOOD KARIMZADEH, AIA, DEPUTY CITY ENGINEER
1-24-2019
LICENSED ARCHITECT ROBERT LOMELIN No. C 23333 Renewal 08/31/2020 STATE OF CALIFORNIA
WORK ORDER NO. E170267B
PLAN FILE NO. 860
DRAWING NO. G112
SHEET 20 OF SHEETS 211
PLOTTED:7/1/2019 11:35:15 AM

***11B*-804.2.1 Pass through kitchen.** In pass through kitchens where counters, appliances or cabinets are on two opposing sides, or where counters, appliances or cabinets are opposite a parallel wall, clearance between all opposing base cabinets, counter tops, appliances or walls within kitchen work areas shall be 40 inches (*1016* mm) minimum. Pass through kitchens shall have two entries.

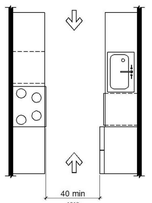

FIGURE *11B*-804.2.1
PASS THROUGH KITCHENS

***11B*-804.2.2 U-shaped.** In U-shaped kitchens enclosed on three contiguous sides, clearance between all opposing base cabinets, counter tops, appliances, or walls within kitchen work areas shall be 60 inches (*1524* mm) minimum.

***11B*-804.3 Kitchen work surface.** In residential dwelling units required to comply with Section *11B*-809, at least one 30 inches (762 mm) wide minimum section of counter shall provide a kitchen work surface that complies with *Section 11B*-804.3.

***11B*-804.3.1 Clear floor or ground space.** A clear floor space complying with *Section 11B*-305 positioned for a forward approach shall be provided. The clear floor or ground space shall be centered on the kitchen work surface and shall provide knee and toe clearance complying with *Section 11B*-306.

Exception: Cabinetry shall be permitted under the kitchen work surface provided that all of the following conditions are met:

(a) the cabinetry can be removed without removal or replacement of the kitchen work surface;

(b) the finish floor extends under the cabinetry; and

(c) the walls behind and surrounding the cabinetry are finished.

***11B*-804.3.2 Height.** The kitchen work surface shall be 34 inches (*864* mm) maximum above the finish floor or ground.

Exception: A counter that is adjustable to provide a kitchen work surface at variable heights, 29 inches (*737* mm) minimum and 36 inches (*914* mm) maximum, shall be permitted.

***11B*-804.3.3 Exposed surfaces.** There shall be no sharp or abrasive surfaces under the work surface counters.

***11B*-804.4 Sinks.** Sinks shall comply with *Section 11B*-606.

***11B*-804.5 Storage.** At least 50 percent of shelf space in storage facilities shall comply with *Section 11B*-811.

***11B*-804.6 Appliances.** Where provided, kitchen appliances shall comply with *Section 11B*-804.6.

***11B*-804.6.1 Clear floor or ground space.** A clear floor or ground space complying with *Section 11B*-305 shall be provided at each kitchen appliance. Clear floor or ground spaces shall be permitted to overlap.

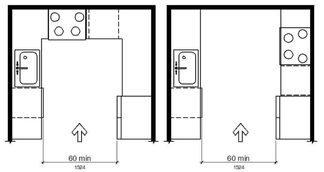

FIGURE *11B*-804.2.2
U-SHAPED KITCHENS

***11B*-804.6.2 Operable parts.** All appliance controls shall comply with *Section 11B*-309.

Exceptions:

1. Appliance doors and door latching devices shall not be required to comply with *Section 11B*-309.4.
2. Bottom-hinged appliance doors, when in the open position, shall not be required to comply with *Section 11B*-309.3.

***11B*-804.6.3 Dishwasher.** Clear floor or ground space shall be positioned adjacent to the dishwasher door. The dishwasher door, in the open position, shall not obstruct the clear floor or ground space for the dishwasher or the sink.

***11B*-804.6.4 Range or cooktop.** Where a forward approach is provided, the clear floor or ground space shall provide knee and toe clearance complying with *Section 11B*-306. Where knee and toe space is provided, the underside of the range or cooktop shall be insulated or otherwise configured to prevent burns, abrasions, or electrical shock. The location of controls shall not require reaching across burners.

***11B*-804.6.5 Oven.** Ovens shall comply with *Section 11B*-804.6.5.

***11B*-804.6.5.1 Side-hinged door ovens.** Side-hinged door ovens shall have the work surface required by *Section 11B*-804.3 positioned adjacent to the latch side of the oven door.

***11B*-804.6.5.2 Bottom-hinged door ovens.** Bottom-hinged door ovens shall have the work surface required by *Section 11B*-804.3 positioned adjacent to one side of the door.

***11B*-804.6.5.3 Controls.** Ovens shall have controls on front panels.

***11B*-804.6.6 Refrigerator/freezer.** Combination refrigerators and freezers shall have at least 50 percent of the freezer space 54 inches (*1372* mm) maximum above the finish floor or ground. The clear floor or ground space shall be positioned for a parallel approach to the space dedicated to a refrigerator/freezer with the centerline of the clear floor or ground space offset 24 inches (610 mm) maximum from the centerline of the dedicated space.

***11B*-805 Medical care and long-term care facilities**

***11B*-805.1 General.** *Medical care facilities and long-term care facilities shall comply with Section 11B-805. All common use spaces and public use spaces in medical care facilities and long-term care facilities shall comply with this chapter.*

***11B*-805.2 Patient bedrooms and resident sleeping rooms.** *Patient bedrooms and resident sleeping rooms required to provide mobility features shall comply with Section 11B-805.2.*

***11B*-805.2.1 Hand washing fixtures.** *Hand washing fixtures shall comply with Section 11B-606.*

***11B*-805.2.2 Beds.** *A 36 inch (914 mm) minimum wide clear space shall be provided along the full length of each side of the beds.*

***11B*-805.2.3 Turning space.** *Turning space complying with Section 11B-304 shall be provided within the room.*

***11B*-805.2.4 Toilet and bathing rooms.** *Toilet and bathing rooms that are provided as part of patient bedrooms and resident sleeping rooms complying with Section 11B-223.2 or 11B-223.3 shall comply with Section 11B-603. Where provided, one water closet, one lavatory, and one bathtub or shower shall comply with the applicable requirements of Sections 11B-603 through 11B-610.*

***11B*-805.3 Waiting rooms.** *Waiting rooms shall comply with Section 11B-805.3.*

***11B*-805.3.1 Wheelchair spaces.** *Where seating is provided in waiting rooms, at least 5 percent of the seating shall be wheelchair spaces complying with Section 11B-802.1.*

***Exception:** In waiting rooms serving facilities specializing in treating conditions that affect mobility, 10 percent of the seating shall be wheelchair spaces complying with Section 11B-802.1.*

***11B*-805.4 Examination, diagnostic and treatment rooms.** *Examination, diagnostic and treatment rooms shall comply with Section 11B-805.4.*

***11B*-805.4.1 Beds, exam tables, procedure tables, gurneys and lounge chairs.** *A 36-inch (914 mm) minimum wide clear space shall be provided along the full length of each side of beds, exam tables, procedure tables, gurneys and lounge chairs.*

***Exception:** General exam rooms in non-emergency settings may provide clear space on only one side of beds, gurneys and exam tables.*

***11B*-805.4.2 Equipment.** *Clear space complying with Section 11B-305.2 shall be provided as required for specific equipment.*

***11B*-805.4.3 Turning space.** *Turning space complying with Section 11B-304 shall be provided within the room.*

***11B*-805.5 Patient change areas.** *Areas where patients change or are prepared for a procedure shall comply with Section 11B-222.*

***11B*-805.6 Hand washing fixtures, lavatories and sinks.** *All hand washing fixtures, lavatories and sinks shall comply with Section 11B-606.*

***Exception:** Scrub sinks, as defined in California Plumbing Code Section 221.0, shall not be required to comply with Section 11B-606.*

***11B*-805.7 Built-in cabinets and work surfaces.** *Built-in cabinets, counters and work surfaces shall be accessible, including: patient wardrobes, nurse's stations, administrative centers, reception desks, medicine preparation areas, laboratory work stations, equipment consoles, clean and soiled utility cabinets, and storage areas; and shall comply with Sections 11B-225 and 11B-902.*

Exceptions:

1. *Built-in wardrobes in patient bedrooms and resident sleeping rooms not required to be accessible are not required to comply with the provisions of this chapter.*
2. *Clinical laboratory work stations provided in a laboratory area that are in addition to the minimum number required to be accessible (5 percent of the work stations provided, but no fewer than one), are not required to comply with the provisions of Section 11B-902.*

***11B*-806 Transient lodging guest rooms**

***11B*-806.1 General.** Transient lodging guest rooms shall comply with *Section 11B*-806. Guest rooms required to provide mobility features shall comply with *Section 11B*-806.2. Guest rooms required to provide communication features shall comply with *Section 11B*-806.3.

***11B*-806.2 Guest rooms with mobility features.** Guest rooms required to provide mobility features shall comply with *Section 11B*-806.2.

***11B*-806.2.1 Living and dining areas.** Living and dining areas shall be accessible.

***11B*-806.2.2 Exterior spaces.** Exterior spaces, including patios, terraces and balconies, that serve the guest room shall be accessible.

***11B*-806.2.3 Sleeping areas.** At least one sleeping area shall provide a *36 inch (914 mm) by 48 inch (1219 mm) minimum* clear space on both sides of a bed. The clear space shall be positioned for parallel approach to the side of the bed.

Exception: Where a single clear floor space complying with *Section 11B*-305 positioned for parallel approach is provided between two beds, a clear floor or ground space shall not be required on both sides of a bed.

***11B-806.2.3.1 Personal lift device floor space.** There shall be a clear space under the bed for the use of a personal lift device. The clear space shall extend under the bed parallel to the long side and be adjacent to an accessible route. The clear space shall extend to points horizomtally 30 inches (762 mm), vertically 7 inches (178 mm) and not more than 12 inches (305 mm) from the head and foot end of the bed.*

***11B*-806.2.4 Toilet and bathing facilities.** At least one bathroom that is provided as part of a guest room shall comply with *Section 11B*-603. No fewer than one water closet, one lavatory, and one bathtub or shower shall comply with applicable requirements of *Sections 11B*-603 through *11B*-610. In addition, required roll-in shower compartments shall comply with *Section 11B*-608.2.2 or *11B*-608.2.3. Toilet and bathing fixtures required to comply with *Sections 11B*-603 through *11B*-610 shall be permitted to be located in more than one toilet or bathing area, provided that travel between fixtures does not require travel between other parts of the guest room.

***11B*-806.2.4.1 Vanity counter top space.** If vanity counter top space is provided in non-accessible guest toilet or bathing rooms, comparable vanity counter top space, in terms of size and proximity to the lavatory, shall also be provided in accessible guest toilet or bathing rooms.

***11B*-806.2.5 Kitchens, kitchenettes *and wet bars*.** Kitchens, kitchenettes *and wet bars* shall comply with *Section 11B*-804.

***11B*-806.2.6 Turning space.** Turning space complying with *Section 11B*-304 shall be provided within the guest room.

***11B*-806.3 Guest rooms with communication features.** Guest rooms required to provide communication features shall comply with *Section 11B*-806.3.

***11B*-806.3.1 Alarms.** Where emergency warning systems are provided, *fire* alarms *shall comply* with *Section 11B*-702 *and carbon monoxide alarms shall comply with Chapter 4.*

***11B*-806.3.2 Notification devices.** Visible notification devices shall be provided to alert room occupants of incoming telephone calls and a door knock or bell. Notification devices shall not be connected to visible alarm signal appliances. Telephones shall have volume controls compatible with the telephone system and shall comply with *Section 11B*-704.3. Telephones shall be served by an electrical outlet complying with *Section 11B*-309 located within 48 inches (*1219* mm) of the telephone to facilitate the use of a TTY.

***11B*-807 Holding cells and housing cells**

***11B*-807.1 General.** Holding cells and housing cells shall comply with *Section 11B*-807.

***11B*-807.2 Cells with mobility features.** Cells required to provide mobility features shall comply with *Section 11B*-807.2.

***11B*-807.2.1 Turning space.** Turning space complying with *Section 11B*-304 shall be provided within the cell.

***11B*-807.2.2 Benches.** Where benches are provided, at least one bench shall comply with *Section 11B*-903.

***11B*-807.2.3 Beds.** Where beds are provided, clear floor space complying with *Section 11B*-305 shall be provided on at least one side of the bed. The clear floor space shall be positioned for parallel approach to the side of the bed.

***11B*-807.2.4 Toilet and bathing facilities.** Toilet facilities or bathing facilities that are provided as part of a cell shall comply with *Section 11B*-603. Where provided, no fewer than one water closet, one lavatory, and one bathtub or shower shall comply with the applicable requirements of *Sections 11B*-603 through *11B*-610.

***11B*-807.3 Cells with communication features.** Cells required to provide communication features shall comply with *Section 11B*-807.3.

***11B*-807.3.1 Alarms.** Where audible emergency alarm systems are provided to serve the occupants of cells, visible alarms complying with *Section 11B*-702 shall be provided.

Exception: Visible alarms shall not be required where inmates or detainees are not allowed independent means of egress.

***11B*-807.3.2 Telephones.** Telephones, where provided within cells, shall have volume controls complying with *Section 11B*-704.3.

***11B*-808 Courtrooms**

***11B*-808.1 General.** Courtrooms shall comply with *Section 11B*-808.

***11B*-808.2 Turning space.** Where provided, areas that are raised or depressed and accessed by ramps or platform lifts with entry ramps shall provide unobstructed turning space complying with *Section 11B*-304.

***11B*-808.3 Clear floor space.** Each jury box and witness stand shall have, within its defined area, clear floor space complying with *Section 11B*-305.

Exception: In alterations, wheelchair spaces are not required to be located within the defined area of raised jury boxes or witness stands and shall be permitted to be located outside these spaces where ramp or platform lift access poses a hazard by restricting or projecting into a means of egress required by the appropriate administrative authority.

***11B*-808.4 Judges' benches and courtroom stations.** Judges' benches, clerks' stations, bailiffs' stations, deputy clerks' stations, court reporters' stations and litigants' and counsel stations shall comply with *Section 11B*-902.

***11B*-809 Residential dwelling units**

***11B*-809.1 General.** *When located within public housing facilities, residential* dwelling units shall comply with *Section 11B*-809. Residential dwelling units required to provide mobility features shall comply with *Sections 11B*-809.2 through *11B*-809.4. Residential dwelling units required to provide communication features shall comply with *Section 11B*-809.5.

***11B*-809.2 Accessible routes.** Accessible routes complying with *Division 4* shall be provided within residential dwelling units in accordance with *Section 11B*-809.2.

Exception: Accessible routes shall not be required to or within unfinished attics or unfinished basements.

***11B*-809.2.1 Location.** At least one accessible route shall connect all spaces and elements which are a part of the residential dwelling unit. Where only one accessible route is provided, it shall not pass through bathrooms, closets, or similar spaces.

***11B*-809.2.2 Turning space.** All rooms served by an accessible route shall provide a turning space complying with *Section 11B*-304.

Exception: Turning space shall not be required in exterior spaces 30 inches (762 mm) maximum in depth or width.

***11B*-809.3 Kitchen.** Where a kitchen is provided, it shall comply with *Section 11B*-804.

***11B*-809.4 Toilet facilities and bathing facilities.** At least one bathroom shall comply with *Section 11B*-603. No fewer than one of each type of fixture provided *within the bathroom* shall comply with applicable requirements of *Sections 11B*-603 through *11B*-610. Toilet and bathing fixtures required to comply with *Sections 11B*-603 through *11B*-610 shall be located in the same *bathroom or* toilet and bathing area, such that travel between fixtures does not require travel between other parts of the residential dwelling unit.

***11B*-809.4.1 Subsequent bathrooms.** *In residential dwelling units with more than one bathroom, when a bathtub is installed in the first bathroom in compliance with Section 11B-809.4 and a shower compartment is provided in a subsequent bathroom, at least one shower compartment shall comply with Section 11B-608.*

***11B*-809.5 Residential dwelling units with communication features.** Residential dwelling units required to provide communication features shall comply with *Section 11B*-809.5.

***11B*-809.5.1 Building fire alarm system.** Where a building fire alarm system is provided, the system wiring shall be extended to a point within the residential dwelling unit in the vicinity of the residential dwelling unit smoke detection system.

***11B*-809.5.1.1 Alarm appliances.** Where alarm appliances are provided within a residential dwelling unit as part of the building fire alarm system, they shall comply with *Chapter 9, Section 907.5.2.3.3.*

***11B*-809.5.1.2 Activation.** All visible alarm appliances provided within the residential dwelling unit for building fire alarm notification shall be activated upon activation of the building fire alarm in the portion of the building containing the residential dwelling unit.

***11B*-809.5.2 Residential dwelling unit smoke detection system *and carbon monoxide detection system*.** Residential dwelling unit smoke detection systems shall comply with Chapter 9, Section 907.2.11. *Residential dwelling unit carbon monoxide detection systems shall comply with Chapter 4.*

***11B*-809.5.2.1 Activation.** All visible alarm appliances provided within the residential dwelling unit for smoke detection notification shall be activated upon smoke detection. *All visible alarm appliances provided within the residential dwelling unit for carbon monoxide detection notification shall be activated upon carbon monoxide detection.*

***11B*-809.5.3 Interconnection.** The same visible alarm appliances shall be permitted to provide notification of residential dwelling unit smoke detection, building fire alarm activation, *and carbon monoxide detection.*

***11B*-809.5.4 Prohibited use.** Visible alarm appliances used to indicate residential dwelling unit smoke detection, *carbon monoxide detection,* or building fire alarm activation shall not be used for any other purpose within the residential dwelling unit.

***11B*-809.5.5 Residential dwelling unit primary entrance.** Communication features shall be provided at the residential dwelling unit primary entrance complying with *Section 11B*-809.5.5.

***11B*-809.5.5.1 Notification.** A hard-wired electric doorbell shall be provided. A button or switch shall be provided outside the residential dwelling unit primary entrance. Activation of the button or switch shall initiate an audible tone and visible signal within the residential dwelling unit. Where visible doorbell signals are located in sleeping areas, they shall have controls to deactivate the signal.

***11B*-809.5.5.2 Identification.** A means for visually identifying a visitor without opening the residential dwelling unit entry door shall be provided and shall allow for a minimum 180 degree range of view.

***11B*-809.5.6 Site, building, or floor entrance.** Where a system, including a closed-circuit system, permitting voice communication between a visitor and the occupant of the residential dwelling unit is provided, the system shall comply with *Section 11B*-708.4.

***11B*-810 Transportation facilities**

***11B*-810.1 General.** Transportation facilities shall comply with *Section 11B*-810.

***11B*-810.1.1 Vehicle boarding.** *Stations shall not be designed or constructed so as to require persons with disabilities to board or alight from a vehicle at a location other than one used by the general public.*

***11B*-810.1.2 Baggage systems.** *Baggage check-in and retrieval systems shall be on an accessible route complying with Section 11B-402 and shall have space immediately adjacent complying with Section 11B-302.*

***11B*-810.2 Bus boarding and alighting areas.** Bus boarding and alighting areas shall comply with *Section 11B*-810.2.

***11B*-810.2.1 Surface.** Bus stop boarding and alighting areas shall have a firm, stable surface.

***11B*-810.2.2 Dimensions.** Bus stop boarding and alighting areas shall provide a clear length of 96 inches (*2438* mm) minimum, measured perpendicular to the curb or vehicle roadway edge, and a clear width of 60 inches (*1524* mm) minimum, measured parallel to the vehicle roadway.

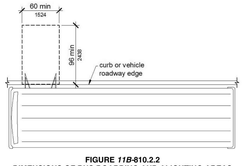

FIGURE *11B*-810.2.2
DIMENSIONS OF BUS BOARDING AND ALIGHTING AREAS

***11B*-810.2.3 Connection.** Bus stop boarding and alighting areas shall be connected to streets, sidewalks, or pedestrian paths by an accessible route complying with *Section 11B*-402. *Newly constructed bus stop boarding and alighting areas shall provide a detectable transition between the boarding/alighting area and the roadway; the detectable transition shall consist of a curb with the face sloped at 35 degrees maximum from vertical or detectable warnings complying with Sections 11B-705.1.1 and 11B-705.1.2.4.*

***11B*-810.2.4 Slope.** Parallel to the roadway, the slope of the bus stop boarding and alighting area shall be the same as the roadway, to the maximum extent practicable. Perpendicular to the roadway, the slope of the bus stop boarding and alighting area shall not be steeper than 1:48.

***11B*-810.3 Bus shelters.** Bus shelters shall provide a minimum clear floor or ground space complying with *Section 11B*-305 entirely within the shelter. Bus shelters shall be connected by an accessible route complying with *Section 11B*-402 to a boarding and alighting area complying with *Section 11B*-810.2.

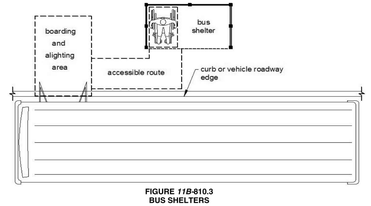

FIGURE *11B*-810.3
BUS SHELTERS

***11B*-810.4 Bus signs.** Bus route identification signs shall comply with *Sections 11B*-703.5.1 through *11B*-703.5.4, and *Sections 11B*-703.5.7 and *11B*-703.5.8. In addition, to the maximum extent practicable, bus route identification signs shall comply with *Section 11B*-703.5.5.

Exception: Bus schedules, timetables and maps that are posted at the bus stop or bus bay shall not be required to comply.

***11B*-810.5 Rail platforms.** Rail platforms shall comply with *Section 11B*-810.5.

***11B*-810.5.1 Slope.** Rail platforms shall not exceed a slope of 1:48 in all directions.

Exception: Where platforms serve vehicles operating on existing track or track laid in existing roadway, the slope of the platform parallel to the track shall be permitted to be equal to the slope (grade) of the roadway or existing track.

***11B*-810.5.2 Detectable warnings.** Platform boarding edges not protected by platform screens or guards shall have detectable warnings complying with *Section 11B*-705 along the full length of the public use area of the platform.

***11B*-810.5.3 Platform and vehicle floor coordination.** Station platforms shall be positioned to coordinate with vehicles in accordance with the applicable requirements of 36 CFR Part 1192. Low-level platforms shall be 8 inches (*203* mm) minimum above top of rail.

Exception: Where vehicles are boarded from sidewalks or street-level, low-level platforms shall be permitted to be less than 8 inches (*203* mm).

***11B*-810.6 Rail station signs.** Rail station signs shall comply with *Section 11B*-810.6.

Exception: Signs shall not be required to comply with *Sections 11B*-810.6.1 and *11B*-810.6.2 where audible signs are remotely transmitted to hand-held receivers, or are user- or proximity-actuated.

***11B*-810.6.1 Entrances.** Where signs identify a station or its entrance, at least one sign at each entrance shall comply with *Section 11B*-703.2 and shall be placed in uniform locations to the maximum extent practicable. Where signs identify a station that has no defined entrance, at least one sign shall comply with *Section 11B*-703.2 and shall be placed in a central location.

***11B*-810.6.2 Routes and destinations.** Lists of stations, routes and destinations served by the station which are located on boarding areas, platforms, or mezzanines shall comply with *Section 11B*-703.5. At least one tactile sign identifying the specific station and complying with *Section 11B*-703.2 shall be provided on each platform or boarding area. Signs covered by this requirement shall, to the maximum extent practicable, be placed in uniform locations within the system.

Exception: Where sign space is limited, characters shall not be required to exceed 3 inches (76 mm).

***11B*-810.6.3 Station names.** Stations covered by this section shall have identification signs complying with *Section 11B*-703.5. Signs shall be clearly visible and within the sight lines of standing and sitting passengers from within the vehicle on both sides when not obstructed by another vehicle.

***11B*-810.7 Public address systems.** Where public address systems convey audible information to the public, the same or equivalent information shall be provided in a visual format.

***11B*-810.8 Clocks.** Where clocks are provided for use by the public, the clock face shall be uncluttered so that its elements are clearly visible. Hands, numerals and digits shall contrast with the background either light-on-dark or dark-on-light. Where clocks are installed overhead, numerals and digits shall comply with *Section 11B*-703.5.

***11B*-810.9 Escalators.** Where provided, escalators shall comply with Sections 6.1.3.5.6 and 6.1.3.6.5 of ASME A17.1 and shall have a clear width of 32 inches (*813* mm) minimum.

Exception: Existing escalators in key stations shall not be required to comply with *Section 11B*-810.9.

***11B*-810.10 Track crossings.** Where a circulation path serving boarding platforms crosses tracks, it shall comply with *Section 11B*-402.

Exception: Openings for wheel flanges shall be permitted to be 2½ inches (64 mm) maximum.

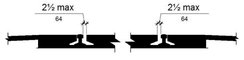

FIGURE *11B*-810.10 (EXCEPTION)
TRACK CROSSINGS

***11B*-811 Storage**

***11B*-811.1 General.** Storage shall comply with *Section 11B*-811.

***11B*-811.2 Clear floor or ground space.** A clear floor or ground space complying with *Section 11B*-305 shall be provided.

***11B*-811.3 Height.** Storage elements shall comply with at least one of the reach ranges specified in *Section 11B*-308.

***11B*-811.4 Operable parts.** Operable parts shall comply with *Section 11B*-309.

***11B*-812 Electric vehicle charging stations**

***11B*-812.1 General.** *Electric vehicle charging stations (EVCS) shall comply with Section 11B-812 as required by Section 11B-228.3. Where vehicle spaces and access aisles are marked with lines, measurements shall be made from the centerline of the markings.*

***Exception:** Where vehicle spaces or access aisles are not adjacent to another vehicle space, access aisle, or parking space, measurements shall be permitted to include the full width of the line defining the vehicle space or access aisle.*

***11B*-812.2 Operable parts.** *Operable parts shall comply with Section 11B-309.*

***11B*-812.3 Floor or ground surfaces.** *Vehicle spaces and access aisles serving them shall comply with Section 11B-302. Access aisles shall be at the same level as the vehicle space they serve. Changes in level, slopes exceeding 1:48, and detectable warnings shall not be permitted in vehicle spaces and access aisles.*

***11B*-812.4 Vertical clearance.** *Vehicle spaces, access aisles serving them, and vehicular routes serving them shall provide a vertical clearance of 98 inches (2489 mm) minimum. Where provided, overhead cable management systems shall not obstruct required vertical clearance.*

***11B*-812.5 Accessible routes**

***11B*-812.5.1 Accessible route to building or facility.** *EVCS complying with Section 11B-812 that serve a particular building or facility shall be located on an accessible route to an entrance complying with Section 11B-206.4. Where EVCS do not serve a particular building or facility, EVCS complying with Section 11B-812 shall be located on an accessible route to an accessible pedestrian entrance of the EV charging facility.*

***Exception:** EVCS complying with Section 11B-812 shall be permitted to be located in different EV charging facilities if substantially equivalent or greater accessibility is provided in terms of distance from an accessible entrance or entrances, charging fee, and user convenience.*

***11B*-812.5.2 Accessible route to EV charger.** *An accessible route complying with Section 11B-402 shall be provided between the vehicle space and the EV charger which serves it.*

***11B*-812.5.3 Relationship to accessible routes.** *Vehicle spaces and access aisles shall be designed so that when the vehicle space is occupied the required clear width of adjacent accessible routes is not obstructed. A curb, wheel stop, bollards, or other barrier shall be provided if required to prevent encroachment of vehicles over the required clear width of adjacent accessible routes.*

***11B*-812.5.4 Arrangement.** *Vehicle spaces and access aisles shall be designed so that persons using them are not required to travel behind vehicle spaces or parking spaces other than the vehicle space in which their vehicle has been left to charge.*

Exceptions:

1. *Ambulatory EVCS shall not be required to comply with Section 11B-812.5.4.*
2. *Vehicle spaces installed in existing facilities shall comply with Section 11B-812.5.4 to the maximum extent feasible.*

***11B*-812.5.5 Obstructions.** *EVCS shall be designed so accessible routes are not obstructed by cables or other elements.*

***11B*-812.6 Vehicle spaces.** *Vehicle spaces serving van accessible, standard accessible, ambulatory and drive-up EVCS shall be 216 inches (5486 mm) long minimum and shall comply with Sections 11B-812.6.1 through 11B-812.6.4 as applicable. All vehicle spaces shall be marked to define their width.*

Exceptions:

1. *Where the long dimension of vehicle spaces is parallel to the traffic flow in the adjacent vehicular way, the length of vehicle spaces shall be 240 inches (6096 mm) minimum.*
2. *Vehicle spaces at drive-up EVCS shall be 240 inches (6096 mm) long minimum and shall not be required to be marked to define their width.*

***11B*-812.6.1 Van accessible.** *Vehicle spaces serving van accessible EVCS shall be 144 inches (3658 mm) wide minimum and shall have an adjacent access aisle complying with Section 11B-812.7.*

***11B*-812.6.2 Standard accessible.** *Vehicle spaces serving standard accessible EVCS shall be 108 inches (2743 mm) wide minimum and shall have an adjacent access aisle complying with Section 11B-812.7.*

***11B*-812.6.3 Ambulatory.** *Vehicle spaces serving ambulatory EVCS shall be 120 inches (3048 mm) wide minimum and shall not be required to have an adjacent access aisle.*

***11B*-812.6.4 Drive-up.** *Vehicle spaces serving drive-up EVCS shall be 204 inches (5182 mm) wide minimum and shall not be required to have an adjacent access aisle.*

***11B*-812.7 Access aisle.** *Access aisles shall adjoin an accessible route. Two vehicle spaces shall be permitted to share a common access aisle. Access aisles shall be 60 inches (1524 mm) wide minimum and shall extend the full required length of the vehicle spaces they serve.*

***11B*-812.7.1 Location.** *Access aisles at vehicle spaces shall not overlap the vehicular way and may be placed on either side of the vehicle space they serve except for van accessible spaces which shall have access aisles located on the passenger side of the vehicle spaces.*

***11B*-812.7.2 Marking.** *Access aisles at vehicle spaces shall be marked with a painted borderline around their perimeter. The area within the borderlines shall be marked with hatched lines a maximum of 36 inches (914 mm) on center. The color of the borderlines, hatched lines, and letters shall contrast with that of the surface of the access aisle. The blue color required for identification of access aisles for accessible parking shall not be used. Access aisle markings may extend beyond the minimum required length.*

***11B*-812.7.3 Lettering.** *The words "NO PARKING" shall be painted on the surface within each access aisle in letters a minimum of 12 inches (305 mm) in height and located to be visible from the adjacent vehicular way.*

***11B*-812.8 Identification signs.** *EVCS identification signs shall be provided in compliance with Section 11B-812.8.*

***11B*-812.8.1 Four or fewer.** *Where four or fewer total EVCS are provided, identification with an International Symbol of Accessibility (ISA) shall not be required.*

***11B*-812.8.2 Five to twenty-five.** *Where five to twenty-five total EVCS are provided, one van accessible EVCS shall be identified by an ISA complying with Section 11B-703.7.2.1. The required standard accessible EVCS shall not be required to be identified with an ISA.*

***11B*-812.8.3 Twenty-six or more.** *Where twenty-six or more total EVCS are provided, all required van accessible and all required standard accessible EVCS shall be identified by an ISA complying with Section 11B-703.7.2.1.*

***11B*-812.8.4 Ambulatory.** *Ambulatory EVCS shall not be required to be identified by an ISA.*

***11B*-812.8.5 Drive-up.** *Drive-up EVCS shall not be required to be identified by an ISA.*

***11B*-812.8.6 Finish and size.** *Identification signs shall be reflectorized with a minimum area of 70 square inches (45 161 mm²).*

***11B*-812.8.7 Location.** *Required identification signs shall be visible from the EVCS it serves. Signs shall be permanently posted either immediately adjacent to the vehicle space or within the projected vehicle space width at the head end of the vehicle space. Signs identifying van accessible vehicle spaces shall contain the designation "van accessible." Signs shall be 60 inches (1525 mm) minimum above the finish floor or ground surface measured to the bottom of the sign. Signs located within an accessible route shall be 80 inches (2032 mm) minimum above the finish floor or ground surface measured to the bottom of the sign. Signs may also be permanently posted on a wall at the interior end of the vehicle space.*

***11B*-812.9 Surface marking.** *EVCS vehicle spaces shall provide surface marking stating "EV CHARGING ONLY" in letters 12 inches (305 mm) high minimum. The centerline of the text shall be a maximum of 6 inches (152 mm) from the centerline of the vehicle space and its lower corner at, or lower side aligned with, the end of the parking space length.*

***11B*-812.10 Electric vehicle chargers**

***11B*-812.10.1 General.** *EV chargers shall comply with Section 11B-812.10.*

***11B*-812.10.2 Operable parts.** *Operable parts and charging cord storage shall comply with Section 11B-309.*

***11B*-812.10.3 Point-of-sale devices.** *Where provided, point-of-sale devices shall comply with Sections 11B-707.2, 11B-707.3, 11B-707.7.2, and 11B-707.9.*

***11B*-812.10.4 Location.** *EV chargers shall be adjacent to, and within the projected width of, the vehicle space being served.*

Exceptions:

1. *EV chargers serving more than one EVCS shall be adjacent to, and within the combined projected width of, the vehicle spaces being served.*
2. *For alterations at existing facilities where an accessible route or general circulation path is not provided adjacent to the head end of the vehicle space or access aisle, the EV charger may be located within the projected width of the access aisle 36 inches (914 mm) maximum from the head end of the space.*
3. *Where the long dimension of a vehicle space is parallel to the vehicular way, the EV charger shall be adjacent to, and 48 inches (1219 mm) maximum from the head end or foot end of the vehicle space or access aisle being served.*

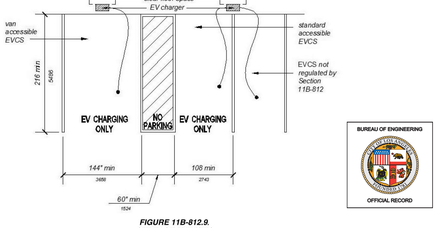

FIGURE 11B-812.9
SURFACE MARKING

THE CITY OF LOS ANGELES OR ITS OFFICERS OR AGENTS SHALL NOT BE RESPONSIBLE FOR THE ACCURACY OR COMPLETENESS OF ELECTRONIC COPIES OF THIS PLAN SHEET.
FILE PATH: A360://Studio City Recreation Center/SCRC-Project Model_Central_Final.rvt
SHEET ISSUE DATE:01/01/14
REVISION DATES: (DESIGN STAGE ONLY)

BUREAU OF ENGINEERING
CITY OF LOS ANGELES
DEPARTMENT OF PUBLIC WORKS
CITY OF LOS ANGELES
CITY ENGINEER: TED ALLEN, PE
DATE: 1-24-2019
ARCHITECTURAL DIVISION LIC. NO.: C 23333
ARCHITECT: ROBERT LOMELIN 1-24-2019
DESIGNED BY: Z. AKHTER, M. CHAVARRIA, A. KIM, M. LAM 1-24-2019
DRAWN BY: Z. AKHTER, M. CHAVARRIA, A KIM 1-24-2019
CHECKED BY: ROBERT LOMELIN 1-24-2019
APPROVED BY:MAHMOOD KARIMZADEH,AIA, DEPUTY CITY ENGINEER 1-24-2019
CLIENT: DEPARTMENT OF RECREATION AND PARKS
GENERAL MANAGER: MICHAEL A. SHULL
SHEET TITLE: TITLE 24- DISABLED ACCESS REQUIREMENTS
PROJECT: STUDIO CITY RECREATION CENTER
ADDRESS: 12621 RYE STREET, STUDIO CITY, CA 91604
BUREAU OF ENGINEERING
OFFICIAL RECORD

NO. REVISION DESCRIPTION DATE BY
INDEX NO. RP-300106
BUILDING NO. -

WORK ORDER NO. E170267B
PLAN FILE NO. 860
DRAWING NO. G113
SHEET 21 OF SHEETS 211
PLOTTED:7/1/2019 11:35:20 AM

DIVISION 9: BUILT-IN ELEMENTS

11B-901 General

11B-901.1 Scope. The provisions of *Division* 9 shall apply where required by *Division* 2 or where referenced by a requirement in this *chapter*.

11B-902 Dining surfaces and work surfaces

11B-902.1 General. Dining surfaces and work surfaces shall comply with *Sections 11B*-902.2 and *11B*-902.3.

Exception: Dining surfaces and work surfaces for children's use shall be permitted to comply with *Section 11B*-902.4.

11B-902.2 Clear floor or ground space. A clear floor space complying with *Section 11B*-305 positioned for a forward approach shall be provided. Knee and toe clearance complying with *Section 11B*-306 shall be provided.

11B-902.3 Height. The tops of dining surfaces and work surfaces shall be 28 inches (*711* mm) minimum and 34 inches (*864* mm) maximum above the finish floor or ground.

11B-902.4 Dining surfaces and work surfaces for children's use. Accessible dining surfaces and work surfaces for children's use shall comply with *Section 11B*-902.4.

Exception: Dining surfaces and work surfaces that are used primarily by children 5 years and younger shall not be required to comply with *Section 11B*-902.4 where a clear floor or ground space complying with *Section 11B*-305 positioned for a parallel approach is provided.

***11B*-902.4.1 Clear floor or ground space.** A clear floor space complying with *Section 11B*-305 positioned for forward approach shall be provided. Knee and toe clearance complying with *Section 11B*-306 shall be provided, except that knee clearance 24 inches (610 mm) minimum above the finish floor or ground shall be permitted.

***11B*-902.4.2 Height.** The tops of tables and counters shall be 26 inches (660 mm) minimum and 30 inches (*762* mm) maximum above the finish floor or ground.

11B-903 Benches

11B-903.1 General. Benches shall comply with *Section 11B*-903.

11B-903.2 Clear floor or ground space. Clear floor or ground space complying with *Section 11B*-305 shall be provided and shall be positioned at the end of the bench seat and parallel to the short axis of the bench.

11B-903.3 Size. Benches shall have seats that are *48* inches (*1219* mm) long minimum and 20 inches (*508* mm) deep minimum and 24 inches (610 mm) deep maximum.

11B-903.4 Back support. The bench shall provide for back support or shall be affixed to a wall *along its long dimension*. Back support shall be *48* inches (*1219* mm) long minimum and shall extend from a point 2 inches (51 mm) maximum above the seat surface to a point 18 inches (*457* mm) minimum above the seat surface. Back support shall be $2^1/_2$ inches (*64* mm) maximum from the rear edge of the seat measured horizontally.

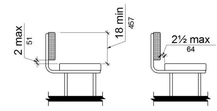

FIGURE *11B*-903.4
BENCH BACK SUPPORT

***11B*-903.5 Height.** The top of the bench seat surface shall be 17 inches (*432* mm) minimum and 19 inches (*483* mm) maximum above the finish floor or ground.

***11B*-903.6 Structural strength.** *Benches shall be affixed to the wall or floor.* Allowable stresses shall not be exceeded for materials used when a vertical or horizontal force of 250 pounds (1112 N) is applied at any point on the seat, fastener, mounting device, or supporting structure.

***11B*-903.7 Wet locations.** Where installed in wet locations, the surface of the seat shall be slip resistant and shall not accumulate water.

***11B*-904 Check-out aisles and sales and service counters**

***11B*-904.1 General.** Check-out aisles and sales and service counters shall comply with the applicable requirements of *Section 11B*-904.

***11B*-904.2 Approach.** All portions of counters required to comply with *Section 11B*-904 shall be located adjacent to a walking surface complying with *Section 11B*-403.

***11B*-904.3 Check-out aisles.** Check-out aisles shall comply with *Section 11B*-904.3.

***11B*-904.3.1 Aisle.** Aisles shall comply with *Section 11B*-403.

***11B*-904.3.2 Counter.** The counter surface height shall be 38 inches (965 mm) maximum above the finish floor or ground. The top of the counter edge protection shall be 2 inches (51 mm) maximum above the top of the counter surface on the aisle side of the check-out counter.

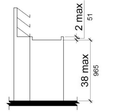

FIGURE *11B*-904.3.2
CHECK-OUT AISLE COUNTERS

***11B*-904.3.3 Check writing surfaces.** Where provided, check writing surfaces shall comply with *Section 11B*-902.3.

***11B*-904.3.4 Identification sign.** *When not all check-out aisles are accessible, accessible check-out aisles shall be identified by a sign clearly visible to a person in a wheelchair displaying the International Symbol of Accessibility complying with Section 11B-703.7.2.1. The sign shall be a minimum of 4 inches by 4 inches (102 mm by 102 mm).*

***11B*-904.4 Sales and service counters.** Sales counters and service counters shall comply with *Section 11B*-904.4.1 or *11B*-904.4.2. The accessible portion of the counter top shall extend the same depth as the sales or service counter top.

Exception: In alterations, when the provision of a counter complying with *Section 11B*-904.4 would result in a reduction of the number of existing counters at work stations or a reduction of the number of existing mail boxes, the counter shall be permitted to have a portion which is 24 inches (610 mm) long minimum complying with *Section 11B*-904.4.1 provided that the required clear floor or ground space is centered on the accessible length of the counter.

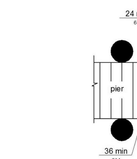

FIGURE *11B*-904.4 (EXCEPTION)
ALTERATION OF SALES AND SERVICE COUNTERS

***11B*-904.4.1 Parallel approach.** A portion of the counter surface that is 36 inches (*914* mm) long minimum and *34* inches (*864* mm) high maximum above the finish floor shall be provided. A clear floor or ground space complying with *Section 11B*-305 shall be positioned for a parallel approach adjacent to the 36 inch (*914* mm) minimum length of counter.

Exception: Where the provided counter surface is less than 36 inches (*914* mm) long, the entire counter surface shall be 34 inches (*864* mm) high maximum above the finish floor.

***11B*-904.4.2 Forward approach.** A portion of the counter surface that is *36* inches (*914* mm) long minimum and *34* inches (*864* mm) high maximum shall be provided. Knee and toe space complying with *Section 11B*-306 shall be provided under the counter. A clear floor or ground space complying with *Section 11B*-305 shall be positioned for a forward approach to the counter.

***11B*-904.5 Food service lines.** Counters in food service lines shall comply with *Section 11B*-904.5.

***11B*-904.5.1 Self-service shelves and dispensing devices.** Self-service shelves and dispensing devices for tableware, dishware, condiments, food and beverages shall comply with *Section 11B*-308.

***11B*-904.5.2 Tray slides.** The tops of tray slides shall be 28 inches (*711* mm) minimum and 34 inches (*864* mm) maximum above the finish floor or ground.

***11B*-904.6 Security glazing.** Where counters or teller windows have security glazing to separate personnel from the public, a method to facilitate voice communication shall be provided. Telephone handset devices, if provided, shall comply with *Section 11B*-704.3.

DIVISION 10: RECREATION FACILITIES

11B-1001 General

11B-1001.1 Scope. The provisions of *Division* 10 shall apply where required by *Division* 2 or where referenced by a requirement in this *chapter*.

11B-1002 Amusement rides

11B-1002.1 General. Amusement rides shall comply with *Section 11B*-1002.

11B-1002.2 Accessible routes. Accessible routes serving amusement rides shall comply with *Division* 4.

Exceptions:

1. In load or unload areas and on amusement rides, where compliance with *Section 11B*-405.2 is not structurally or operationally feasible, ramp slope shall be permitted to be 1:8 maximum.
2. In load or unload areas and on amusement rides, handrails provided along walking surfaces complying with *Section 11B*-403 and required on ramps complying with *Section 11B*-405 shall not be required to comply with *Section 11B*-505 where compliance is not structurally or operationally feasible.

11B-1002.3 Load and unload areas. A turning space complying with *Sections 11B*-304.2 and *11B*-304.3 shall be provided in load and unload areas.

11B-1002.4 Wheelchair spaces in amusement rides. Wheelchair spaces in amusement rides shall comply with *Section 11B*-1002.4.

***11B*-1002.4.1 Floor or ground surface.** The floor or ground surface of wheelchair spaces shall be stable and firm.

***11B*-1002.4.2 Slope.** The floor or ground surface of wheelchair spaces shall have a slope not steeper than 1:48 when in the load and unload position.

***11B*-1002.4.3 Gaps.** Floors of amusement rides with wheelchair spaces and floors of load and unload areas shall be coordinated so that, when amusement rides are at rest in the load and unload position, the vertical difference between the floors shall be within plus or minus $^3/_8$ inches (*15.9* mm) and the horizontal gap shall be 3 inches (*76* mm) maximum under normal passenger load conditions.

Exception: Where compliance is not operationally or structurally feasible, ramps, bridge plates, or similar devices complying with the applicable requirements of 36 CFR 1192.83(c) shall be provided.

***11B*-1002.4.4 Clearances.** Clearances for wheelchair spaces shall comply with *Section 11B*-1002.4.4.

Exceptions:

1. Where provided, securement devices shall be permitted to overlap required clearances.
2. Wheelchair spaces shall be permitted to be mechanically or manually repositioned.
3. Wheelchair spaces shall not be required to comply with *Section 11B*-307.4.

***11B*-1002.4.4.1 Width and length.** Wheelchair spaces shall provide a clear width of 30 inches (*762* mm) minimum and a clear length of 48 inches (*1219* mm) minimum measured to 9 inches (*229* mm) minimum above the floor surface.

***11B*-1002.4.4.2 Side entry.** Where wheelchair spaces are entered only from the side, amusement rides shall be designed to permit sufficient maneuvering clearance for individuals using a wheelchair or mobility aid to enter and exit the ride.

***11B*-1002.4.4.3 Permitted protrusions in wheelchair spaces.** Objects are permitted to protrude a distance of 6 inches (*152* mm) maximum along the front of the wheelchair space, where located 9 inches (*229* mm) minimum and 27 inches (*686* mm) maximum above the floor or ground surface of the wheelchair space. Objects are permitted to protrude a distance of 25 inches (*635* mm) maximum along the front of the wheelchair space, where located more than 27 inches (*686* mm) above the floor or ground surface of the wheelchair space.

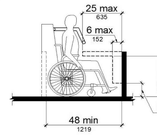

FIGURE *11B*-1002.4.4.3
PROTRUSIONS IN WHEELCHAIR SPACES IN AMUSEMENT RIDES

***11B*-1002.4.5 Ride entry.** Openings providing entry to wheelchair spaces on amusement rides shall be 32 inches (*813* mm) minimum clear.

***11B*-1002.4.6 Approach.** One side of the wheelchair space shall adjoin an accessible route when in the load and unload position.

***11B*-1002.4.7 Companion seats.** Where the interior width of the amusement ride is greater than 53 inches (*1346* mm), seating is provided for more than one rider, and the wheelchair is not required to be centered within the amusement ride, a companion seat shall be provided for each wheelchair space.

***11B*-1002.4.7.1 Shoulder-to-shoulder seating.** Where an amusement ride provides shoulder-to-shoulder seating, companion seats shall be shoulder-to-shoulder with the adjacent wheelchair space.

Exception: Where shoulder-to-shoulder companion seating is not operationally or structurally feasible, compliance with this requirement shall be required to the maximum extent practicable.

***11B*-1002.5 Amusement ride seats designed for transfer.** Amusement ride seats designed for transfer shall comply with *Section 11B*-1002.5 when positioned for loading and unloading.

***11B*-1002.5.1 Clear floor or ground space.** A clear floor or ground space complying with *Section 11B*-305 shall be provided in the load and unload area adjacent to the amusement ride seats designed for transfer.

***11B*-1002.5.2 Transfer height.** The height of amusement ride seats designed for transfer shall be 14 inches (*356* mm) minimum and 24 inches (610 mm) maximum measured from the surface of the load and unload area.

***11B*-1002.5.3 Transfer entry.** Where openings are provided for transfer to amusement ride seats, the openings shall provide clearance for transfer from a wheelchair or mobility aid to the amusement ride seat.

***11B*-1002.5.4 Wheelchair storage space.** Wheelchair storage spaces complying with *Section 11B*-305 shall be provided in or adjacent to unload areas for each required amusement ride seat designed for transfer and shall not overlap any required means of egress or accessible route.

***11B*-1002.6 Transfer devices for use with amusement rides.** Transfer devices for use with amusement rides shall comply with *Section 11B*-1002.6 when positioned for loading and unloading.

***11B*-1002.6.1 Clear floor or ground space.** A clear floor or ground space complying with *Section 11B*-305 shall be provided in the load and unload area adjacent to the transfer device.

***11B*-1002.6.2 Transfer height.** The height of transfer device seats shall be 14 inches (*356* mm) minimum and 24 inches (610 mm) maximum measured from the load and unload surface.

***11B*-1002.6.3 Wheelchair storage space.** Wheelchair storage spaces complying with *Section 11B*-305 shall be provided in or adjacent to unload areas for each required transfer device and shall not overlap any required means of egress or accessible route.

***11B*-1003 Recreational boating facilities**

***11B*-1003.1 General.** Recreational boating facilities shall comply with *Section 11B*-1003.

***11B*-1003.2 Accessible routes.** Accessible routes serving recreational boating facilities, including gangways and floating piers, shall comply with *Division* 4 except as modified by the exceptions in *Section 11B*-1003.2.

***11B*-1003.2.1 Boat slips.** Accessible routes serving boat slips shall be permitted to use the exceptions in *Section 11B*-1003.2.1.

Exceptions:

1. Where an existing gangway or series of gangways is replaced or altered, an increase in the length of the gangway shall not be required to comply with *Section 11B*-1003.2 unless required by *Section 11B*-202.4.
2. Gangways shall not be required to comply with the maximum rise specified in *Section 11B*-405.6.
3. Where the total length of a gangway or series of gangways serving as part of a required accessible route is 80 feet (*24384 mm*) minimum, gangways shall not be required to comply with *Section 11B*-405.2.
4. Where facilities contain fewer than 25 boat slips and the total length of the gangway or series of gangways serving as part of a required accessible route is 30 feet (*9144 mm*) minimum, gangways shall not be required to comply with *Section 11B*-405.2.
5. Where gangways connect to transition plates, landings specified by *Section 11B*-405.7 shall not be required.
6. Where gangways and transition plates connect and are required to have handrails, handrail extensions shall not be required. Where handrail extensions are provided on gangways or transition plates, the handrail extensions shall not be required to be parallel with the ground or floor surface.
7. The cross slope specified in *Sections 11B*-403.3 and *11B*-405.3 for gangways, transition plates, and floating piers that are part of accessible routes shall be measured in the static position.
8. Changes in level complying with *Sections 11B*-303.3 and *11B*-303.4 shall be permitted on the surfaces of gangways and boat launch ramps.

***11B*-1003.2.2 Boarding piers at boat launch ramps.** Accessible routes serving boarding piers at boat launch ramps shall be permitted to use the exceptions in *Section 11B*-1003.2.2.

Exceptions:

1. Accessible routes serving floating boarding piers shall be permitted to use Exceptions 1, 2, 5, 6, 7 and 8 in *Section 11B*-1003.2.1.
2. Where the total length of the gangway or series of gangways serving as part of a required accessible route is 30 feet (*9144* mm) minimum, gangways shall not be required to comply with *Section 11B*-405.2.
3. Where the accessible route serving a floating boarding pier or skid pier is located within a boat launch ramp, the portion of the accessible route located within the boat launch ramp shall not be required to comply with *Section 11B*-405.

***11B*-1003.3 Clearances.** Clearances at boat slips and on boarding piers at boat launch ramps shall comply with *Section 11B*-1003.3.

***11B*-1003.3.1 Boat slip clearance.** Boat slips shall provide clear pier space 60 inches (*1524* mm) wide minimum and at least as long as the boat slips. Each 10 feet (*3048*

mm) maximum of linear pier edge serving boat slips shall contain at least one continuous clear opening 60 inches (*1524* mm) wide minimum.

Exceptions:

1. Clear pier space shall be permitted to be 36 inches (*914* mm) wide minimum for a length of 24 inches (610 mm) maximum, provided that multiple 36 inch (*914* mm) wide segments are separated by segments that are 60 inches (*1524* mm) wide minimum and 60 inches (*1524* mm) long minimum.
2. Edge protection shall be permitted at the continuous clear openings, provided that it is 4 inches (*102* mm) high maximum and 2 inches (51 mm) wide maximum.
3. In existing piers, clear pier space shall be permitted to be located perpendicular to the boat slip and shall extend the width of the boat slip, where the facility has at least one boat slip complying with *Section 11B*-1003.3, and further compliance with *Section 11B*-1003.3 would result in a reduction in the number of boat slips available or result in a reduction of the widths of existing slips.

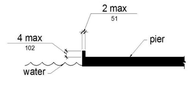

FIGURE *11B*-1003.3.1 (EXCEPTION 2)
EDGE PROTECTION AT BOAT SLIPS

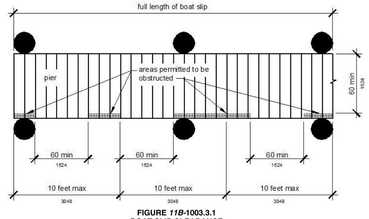

FIGURE *11B*-1003.3.1
BOAT SLIP CLEARANCE

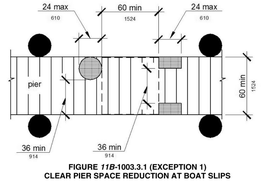

FIGURE *11B*-1003.3.1 (EXCEPTION 1)
CLEAR PIER SPACE REDUCTION AT BOAT SLIPS

***11B*-1003.3.2 Boarding pier clearances.** Boarding piers at boat launch ramps shall provide clear pier space 60 inches (*1524* mm) wide minimum and shall extend the full length of the boarding pier. Every 10 feet (*3048* mm) maximum of linear pier edge shall contain at least one continuous clear opening 60 inches (*1524* mm) wide minimum.

Exceptions:

1. The clear pier space shall be permitted to be 36 inches (*914* mm) wide minimum for a length of 24 inches (610 mm) maximum provided that multiple 36 inch (*914* mm) wide segments are separated by segments that are 60 inches (*1524* mm) wide minimum and 60 inches (*1524* mm) long minimum.
2. Edge protection shall be permitted at the continuous clear openings provided that it is 4 inches (*102* mm) high maximum and 2 inches (51 mm) wide maximum.

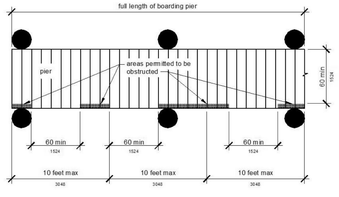

FIGURE *11B*-1003.3.2
BOARDING PIER CLEARANCE

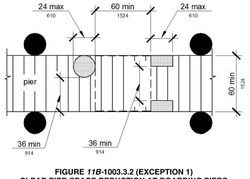

FIGURE *11B*-1003.3.2 (EXCEPTION 1)
CLEAR PIER SPACE REDUCTION AT BOARDING PIERS

***11B*-1004 Exercise machines and equipment**

***11B*-1004.1 Clear floor space.** Exercise machines and equipment shall have a clear floor space complying with *Section 11B*-305 positioned for transfer or for use by an individual seated in a wheelchair. Clear floor or ground spaces required at exercise machines and equipment shall be permitted to overlap.

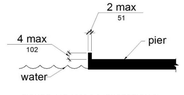

FIGURE *11B*-1003.3.2 (EXCEPTION 2)
EDGE PROTECTION AT BOARDING PIERS

***11B*-1005 Fishing piers and platforms**

***11B*-1005.1 Accessible routes.** Accessible routes serving fishing piers and platforms, including gangways and floating piers, shall comply with *Division* 4.

Exceptions:

1. Accessible routes serving floating fishing piers and platforms shall be permitted to use Exceptions 1, 2, 5, 6, 7 and 8 in *Section 11B*-1003.2.1.
2. Where the total length of the gangway or series of gangways serving as part of a required accessible route is 30 feet (*9144* mm) minimum, gangways shall not be required to comply with *Section 11B*-405.2.

***11B*-1005.2 Railings.** Where provided, railings, guards, or handrails shall comply with *Section 11B*-1005.2.

***11B*-1005.2.1 Height.** At least 25 percent of the railings, guards, or handrails shall be 34 inches (*864* mm) maximum above the ground or deck surface.

Exception: Where a guard complying with *Chapter 10, Sections 1015.2 through 1015.4* is provided, the guard shall not be required to comply with *Section 11B*-1005.2.1.

***11B*-1005.2.1.1 Dispersion.** Railings, guards, or handrails required to comply with *Section 11B*-1005.2.1 shall be dispersed throughout the fishing pier or platform.

***11B*-1005.3 Edge protection.** Where railings, guards, or handrails complying with *Section 11B*-1005.2 are provided, edge protection complying with *Section 11B*-1005.3.1 or *11B*-1005.3.2 shall be provided.

***11B*-1005.3.1 Curb or barrier.** Curbs or barriers shall extend 2 inches (51 mm) minimum above the surface of the fishing pier or platform.

***11B*-1005.3.2 Extended ground or deck surface.** The ground or deck surface shall extend 12 inches (305 mm) minimum beyond the inside face of the railing. Toe clearance shall be provided and shall be 30 inches (*762* mm) wide minimum and 9 inches (*229* mm) minimum above the ground or deck surface beyond the railing.

***11B*-1005.4 Clear floor or ground space.** At each location where there are railings, guards, or handrails complying with *Section 11B*-1005.2.1, a clear floor or ground space complying with *Section 11B*-305 shall be provided. Where there are no railings, guards, or handrails, at least one clear floor or ground space complying with *Section 11B*-305 shall be provided on the fishing pier or platform.

***11B*-1005.5 Turning space.** At least one turning space complying with *Section 11B*-304.3 shall be provided on fishing piers and platforms.

***11B*-1006 Golf facilities**

***11B*-1006.1 General.** Golf facilities shall comply with *Section 11B*-1006.

***11B*-1006.2 Accessible routes.** Accessible routes serving teeing grounds, practice teeing grounds, putting greens, practice putting greens, teeing stations at driving ranges, course weather shelters, golf car rental areas, bag drop areas, and course toilet rooms shall comply with *Division 4* and shall be 48 inches (*1219* mm) wide minimum. Where handrails are provided, accessible routes shall be 60 inches (*1524* mm) wide minimum.

Exception: Handrails shall not be required on golf courses. Where handrails are provided on golf courses, the handrails shall not be required to comply with *Section 11B*-505.

***11B*-1006.3 Golf car passages.** Golf car passages shall comply with *Section 11B*-1006.3.

***11B*-1006.3.1 Clear width.** The clear width of golf car passages shall be 48 inches (*1219* mm) minimum.

***11B*-1006.3.2 Barriers.** Where curbs or other constructed barriers prevent golf cars from entering a fairway, openings 60 inches (*1524* mm) wide minimum shall be provided at intervals not to exceed 75 yards (69 m).

***11B*-1006.4 Weather shelters.** A clear floor or ground space 60 inches (*1524* mm) minimum by 96 inches (*2438* mm) minimum shall be provided within weather shelters.

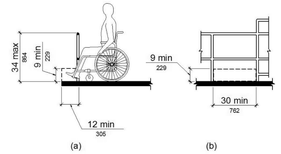

FIGURE *11B*-1005.3.2
EXTENDED GROUND OR DECK SURFACE AT FISHING PIERS AND PLATFORMS

***11B*-1007 Miniature golf facilities**

***11B*-1007.1 General.** Miniature golf facilities shall comply with *Section 11B*-1007.

***11B*-1007.2 Accessible routes.** Accessible routes serving holes on miniature golf courses shall comply with *Division* 4. Accessible routes located on playing surfaces of miniature golf holes shall be permitted to use the exceptions in *Section 11B*-1007.2.

Exceptions:

1. Playing surfaces shall not be required to comply with *Section 11B*-302.2.
2. Where accessible routes intersect playing surfaces of holes, a 1 inch (25 mm) maximum curb shall be permitted for a width of 32 inches (*813* mm) minimum.
3. A slope not steeper than 1:4 for a 4 inch (*102* mm) maximum rise shall be permitted.
4. Ramp landing slopes specified by *Section 11B*-405.7.1 shall be permitted to be 1:20 maximum.
5. Ramp landing length specified by *Section 11B*-405.7.3 shall be permitted to be 48 inches (*1219* mm) long minimum.
6. Ramp landing size specified by *Section 11B*-405.7.4 shall be permitted to be 48 inches (*1219* mm) minimum by 60 inches (*1524* mm) minimum.
7. Handrails shall not be required on holes. Where handrails are provided on holes, the handrails shall not be required to comply with *Section 11B*-505.

***11B*-1007.3 Miniature golf holes.** Miniature golf holes shall comply with *Section 11B*-1007.3.

***11B*-1007.3.1 Start of play.** A clear floor or ground space 48 inches (*1219* mm) minimum by 60 inches (*1524* mm) minimum with slopes not steeper than 1:48 shall be provided at the start of play.

***11B*-1007.3.2 Golf club reach range area.** All areas within holes where golf balls rest shall be within 36 inches (*914* mm) maximum of a clear floor or ground space 36 inches (*914* mm) wide minimum and 48 inches (*1219* mm) long minimum having a running slope not steeper than 1:20. The clear floor or ground space shall be served by an accessible route.

***11B*-1008 Play areas**

***11B*-1008.1 General.** Play areas shall comply with *Section 11B*-1008.

***11B*-1008.2 Accessible routes.** Accessible routes serving play areas shall comply with *Division* 4 and *Section 11B*-1008.2 and shall be permitted to use the exceptions in *Sections 11B*-1008.2.1 through *11B*-1008.2.3. Where accessible routes serve ground level play components, the vertical clearance shall be 80 inches high (*2032* mm) minimum.

***11B*-1008.2.1 Ground level and elevated play components.** Accessible routes serving ground level play components and elevated play components shall be permitted to use the exceptions in *Section 11B*-1008.2.1.

Exceptions:

1. Transfer systems complying with *Section 11B*-1008.3 shall be permitted to connect elevated play components except where 20 or more elevated play components are provided no more than 25 percent of the elevated play components shall be permitted to be connected by transfer systems.
2. Where transfer systems are provided, an elevated play component shall be permitted to connect to another elevated play component as part of an accessible route.

***11B*-1008.2.2 Soft contained play structures.** Accessible routes serving soft contained play structures shall be permitted to use the exception in *Section 11B*-1008.2.2.

Exception: Transfer systems complying with *Section 11B*-1008.3 shall be permitted to be used as part of an accessible route.

***11B*-1008.2.3 Water play components.** Accessible routes serving water play components shall be permitted to use the exceptions in *Section 11B*-1008.2.3.

Exceptions:

1. Where the surface of the accessible route, clear floor or ground spaces, or turning spaces serving water play components is submerged, compliance with *Sections 11B*-302, *11B*-403.3, *11B*-405.2, *11B*-405.3, and *11B*-1008.2.6 shall not be required.
2. Transfer systems complying with *Section 11B*-1008.3 shall be permitted to connect elevated play components in water.

***11B*-1008.2.4 Clear width.** Accessible routes connecting play components shall provide a clear width complying with *Section 11B*-1008.2.4.

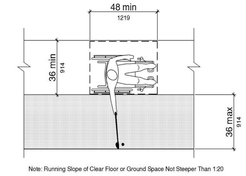

Note: Running Slope of Clear Floor or Ground Space Not Steeper Than 1:20

FIGURE *11B*-1007.3.2
GOLF CLUB REACH RANGE AREA

BUREAU OF ENGINEERING
OFFICIAL RECORD

THE CITY OF LOS ANGELES OR ITS OFFICERS OR AGENTS SHALL NOT BE RESPONSIBLE FOR THE ACCURACY OR COMPLETENESS OF ELECTRONIC COPIES OF THIS PLAN SHEET.
FILE PATH: A360://Studio City Recreation Center/SCRC-Project Model_Central_Final.rvt
SHEET ISSUE DATE: 01/01/14
REVISION DATES (DESIGN STAGE ONLY)

CITY OF LOS ANGELES
PUBLIC WORKS
DEPARTMENT OF
BUREAU OF ENGINEERING
CITY OF LOS ANGELES

NO.	REVISION DESCRIPTION	DATE	BY

INDEX NO. RP-300106
BUILDING NO. -

CITY ENGINEER: TED ALLEN, PE — DATE: 1-24-2019
ARCHITECTURAL DIVISION — LIC. NO.: C 23333 — 1-24-2019
ARCHITECT: ROBERT LOMELIN — 1-24-2019
DESIGNED BY: Z. AKHTER, M. CHAVARRIA, A. KIM, M. LAM — 1-24-2019
DRAWN BY: Z. AKHTER, M. CHAVARRIA, A KIM — 1-24-2019
CHECKED BY: ROBERT LOMELIN — 1-24-2019
APPROVED BY: MAHMOOD KARIMZADEH, AIA, DEPUTY CITY ENGINEER — 1-24-2019

CLIENT: DEPARTMENT OF RECREATION AND PARKS
GENERAL MANAGER: MICHAEL A. SHULL

SHEET TITLE: TITLE 24- DISABLED ACCESS REQUIREMENTS

PROJECT: STUDIO CITY RECREATION CENTER

ADDRESS: 12621 RYE STREET, STUDIO CITY, CA 91604

WORK ORDER NO. E170267B
PLAN FILE NO. 860
DRAWING NO. G114
SHEET 22 OF SHEETS 211

PLOTTED:7/1/2019 11:35:25 AM

***11B*-1008.2.4.1 Ground level.** At ground level, the clear width of accessible routes shall be 60 inches (*1524* mm) minimum.

Exceptions:

1. In play areas less than 1000 square feet (93 m^2), the clear width of accessible routes shall be permitted to be 44 inches (*1118* mm) minimum, if at least one turning space complying with *Section 11B*-304.3 is provided where the restricted accessible route exceeds 30 feet (*9144* mm) in length.
2. The clear width of accessible routes shall be permitted to be 36 inches (*914* mm) minimum for a distance of 60 inches (*1524* mm) maximum provided that multiple reduced width segments are separated by segments that are 60 inches (*1524* mm) wide minimum and 60 inches (*1524* mm) long minimum.

***11B*-1008.2.4.2 Elevated.** The clear width of accessible routes connecting elevated play components shall be 36 inches (*914* mm) minimum.

Exceptions:

1. The clear width of accessible routes connecting elevated play components shall be permitted to be reduced to 32 inches (*813* mm) minimum for a distance of 24 inches (610 mm) maximum provided that reduced width segments are separated by segments that are 48 inches (*1219* mm) long minimum and 36 inches (*914* mm) wide minimum.
2. The clear width of transfer systems connecting elevated play components shall be permitted to be 24 inches (610 mm) minimum.

***11B*-1008.2.5 Ramps.** Within play areas, ramps connecting ground level play components and ramps connecting elevated play components shall comply with *Section 11B*-1008.2.5.

***11B*-1008.2.5.1 Ground level.** Ramp runs connecting ground level play components shall have a running slope not steeper than 1:16.

***11B*-1008.2.5.2 Elevated.** The rise for any ramp run connecting elevated play components shall be 12 inches (305 mm) maximum.

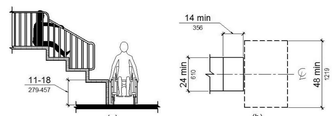

FIGURE *11B*-1008.3.1
TRANSFER PLATFORMS

***11B*-1008.2.5.3 Handrails.** Where required on ramps serving play components, the handrails shall comply with *Section 11B*-505 except as modified by *Section 11B*-1008.2.5.3.

Exceptions:

1. Handrails shall not be required on ramps located within ground level use zones.
2. Handrail extensions shall not be required.

***11B*-1008.2.5.3.1 Handrail gripping surfaces.** Handrail gripping surfaces with a circular cross section shall have an outside diameter of 0.95 inch (24 mm) minimum and 1.55 inches (39 mm) maximum. Where the shape of the gripping surface is non-circular, the handrail shall provide an equivalent gripping surface.

***11B*-1008.2.5.3.2 Handrail height.** The top of handrail gripping surfaces shall be 20 inches (508 mm) minimum and 28 inches (*711* mm) maximum above the ramp surface.

***11B*-1008.2.6 Ground surfaces.** Ground surfaces on accessible routes, clear floor or ground spaces, and turning spaces shall comply with *Section 11B*-1008.2.6.

***11B*-1008.2.6.1 Accessibility.** Ground surfaces shall comply with ASTM F1951. Ground surfaces shall be inspected and maintained regularly and frequently to ensure continued compliance with ASTM F1951.

***11B*-1008.2.6.2 Use zones.** Ground surfaces located within use zones shall comply with ASTM F1292 *(1999 edition or 2004 edition).*

***11B*-1008.3 Transfer systems.** Where transfer systems are provided to connect to elevated play components, transfer systems shall comply with *Section 11B*-1008.3.

***11B*-1008.3.1 Transfer platforms.** Transfer platforms shall be provided where transfer is intended from wheelchairs or other mobility aids. Transfer platforms shall comply with *Section 11B*-1008.3.1.

***11B*-1008.3.1.1 Size.** Transfer platforms shall have level surfaces 14 inches (*356* mm) deep minimum and 24 inches (610 mm) wide minimum.

***11B*-1008.3.1.2 Height.** The height of transfer platforms shall be 11 inches (*279* mm) minimum and 18 inches (*457* mm) maximum measured to the top of the surface from the ground or floor surface.

***11B*-1008.3.1.3 Transfer space.** A transfer space complying with *Sections 11B*-305.2 and *11B*-305.3 shall be provided adjacent to the transfer platform. The 48 inch (*1219* mm) long minimum dimension of the transfer space shall be centered on and parallel to the 24 inch (610 mm) long minimum side of the transfer platform. The side of the transfer platform serving the transfer space shall be unobstructed.

***11B*-1008.3.1.4 Transfer supports.** At least one means of support for transferring shall be provided.

***11B*-1008.3.2 Transfer steps.** Transfer steps shall be provided where movement is intended from transfer platforms to levels with elevated play components required to be on accessible routes. Transfer steps shall comply with *Section 11B*-1008.3.2.

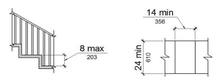

FIGURE *11B*-1008.3.2
TRANSFER STEPS

***11B*-1008.3.2.1 Size.** Transfer steps shall have level surfaces 14 inches (*356* mm) deep minimum and 24 inches (610 mm) wide minimum.

***11B*-1008.3.2.2 Height.** Each transfer step shall be 8 inches (*203* mm) high maximum.

***11B*-1008.3.2.3 Transfer supports.** At least one means of support for transferring shall be provided.

***11B*-1008.3.2.4 Contrasting stripe.** *Striping complying with Section 11B-504.4.1 should be provided at each transfer step.*

***11B*-1008.4 Play components.** Ground level play components on accessible routes and elevated play components connected by ramps shall comply with *Section 11B*-1008.4.

***11B*-1008.4.1 Turning space.** At least one turning space complying with *Section 11B*-304 shall be provided on the same level as play components. Where swings are provided, the turning space shall be located immediately adjacent to the swing.

***11B*-1008.4.2 Clear floor or ground space.** Clear floor or ground space complying with *Sections 11B*-305.2 and *11B*-305.3 shall be provided at play components.

***11B*-1008.4.3 Play tables.** Where play tables are provided, knee clearance 24 inches (610 mm) high minimum, 17 inches deep (*432* mm) minimum, and 30 inches (*762* mm) wide minimum shall be provided. The tops of rims, curbs, or other obstructions shall be 31 inches (*787* mm) high maximum.

Exception: Play tables designed and constructed primarily for children 5 years and younger shall not be required to provide knee clearance where the clear floor or ground space required by *Section 11B*-1008.4.2 is arranged for a parallel approach.

***11B*-1008.4.4 Entry points and seats.** Where play components require transfer to entry points or seats, the entry points or seats shall be 11 inches (279 mm) minimum and 24 inches (610 mm) maximum from the clear floor or ground space.

Exception: Entry points of slides shall not be required to comply with *Section 11B*-1008.4.4.

***11B*-1008.4.5 Transfer supports.** Where play components require transfer to entry points or seats, at least one means of support for transferring shall be provided.

***11B*-1009 Swimming pools, wading pools, and spas**

***11B*-1009.1 General.** Where provided, pool lifts, sloped entries, transfer walls, transfer systems, and pool stairs shall comply with *Section 11B*-1009.

***11B*-1009.2 Pool lifts.** Pool lifts shall comply with *Section 11B*-1009.2.

***11B*-1009.2.1 Pool lift location.** Pool lifts shall be located where the water level *is 36 inches (914 mm) minimum and 48 inches (1219 mm) maximum*.

Exceptions:

1. Where the entire pool depth is *less than 36 inches (914 mm) or* greater than 48 inches (*1219* mm), compliance with *Section 11B*-1009.2.1 shall not be required.
2. Where multiple pool lift locations are provided, no more than one pool lift shall be required to be located in an area where the water level is 48 inches (*1219* mm) maximum.

***11B*-1009.2.2 Seat location.** In the raised position, the centerline of the seat shall be located over the deck and 16 inches (*406* mm) minimum from the edge of the pool. The deck surface between the centerline of the seat and the pool edge shall have a slope not steeper than 1:48.

FIGURE *11B*-1009.2.2
POOL LIFT SEAT LOCATION

***11B*-1009.2.3 Clear deck space.** On the side of the seat opposite the water, a clear deck space shall be provided parallel with the seat. The space shall be 36 inches (*914* mm) wide minimum and shall extend forward 48 inches (*1219* mm) minimum from a line located 12 inches (305 mm) behind the rear edge of the seat. The clear deck space shall have a slope not steeper than 1:48.

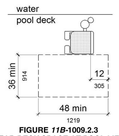

FIGURE *11B*-1009.2.3
CLEAR DECK SPACE AT POOL LIFTS

***11B*-1009.2.4 Seat.** *The seat shall be rigid and shall have a back support that is at least 12 inches (305 mm) tall.* The height of the lift seat shall be designed to allow a stop at *17 inches (432 mm)* minimum to 19 inches (*483* mm) maximum measured from the deck to the top of the seat surface when in the raised (load) position. *The seat shall have a restraint for the use of the occupant with operable parts complying with Section 11B-309.*

FIGURE *11B*-1009.2.4
POOL LIFT SEAT HEIGHT

***11B*-1009.2.5 Seat width.** The seat shall be 16 inches (*406* mm) wide minimum.

***11B*-1009.2.6 Footrests and armrests.** Footrests shall be provided and shall move with the seat. *The seat shall have two armrests. The* armrest positioned opposite the water shall be removable or shall fold clear of the seat when the seat is in the raised (load) position.

Exception: Footrests shall not be required on pool lifts provided in spas.

***11B*-1009.2.7 Operation.** The lift shall be capable of unassisted operation from both the deck and water levels. Controls and operating mechanisms shall be unobstructed when the lift is in use and shall comply with *Section 11B-309.4. The lift shall be stable and not permit unintended movement when a person is getting into or out of the seat.*

***11B*-1009.2.8 Submerged depth.** The lift shall be designed so that the seat will submerge to a water depth of 18 inches (*457* mm) minimum below the stationary water level.

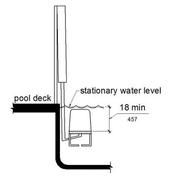

FIGURE *11B*-1009.2.8
POOL LIFT SUBMERGED DEPTH

***11B*-1009.2.9 Lifting capacity.** Single person pool lifts shall have a weight capacity of 300 pounds (136 kg) minimum and be capable of sustaining a static load of at least one and a half times the rated load.

***11B*-1009.3 Sloped entries.** Sloped entries shall comply with *Section 11B*-1009.3.

***11B*-1009.3.1 Sloped entries.** Sloped entries shall comply with *Division* 4 except as modified in *Sections 11B-1009.3.1 through 11B-1009.3.3.*

Exception: Where sloped entries are provided, the surfaces shall not be required to be slip resistant.

***11B*-1009.3.2 Submerged depth.** Sloped entries shall extend to a depth of 24 inches (610 mm) minimum and 30 inches (762 mm) maximum below the stationary water level. Where landings are required by *Section 11B-405.7*, at least one landing shall be located 24 inches (610 mm) minimum and 30 inches (762 mm) maximum below the stationary water level.

Exception: In wading pools, the sloped entry and landings, if provided, shall extend to the deepest part of the wading pool.

FIGURE *11B*-1009.3.2
SLOPED ENTRY SUBMERGED DEPTH

***11B*-1009.3.3 Handrails.** At least two handrails complying with *Section 11B*-505 shall be provided on the sloped entry. The clear width between required handrails shall be 33 inches (*838* mm) minimum and 38 inches (965 mm) maximum.

Exceptions:

1. Handrail extensions specified by *Section 11B*-505.10.1 shall not be required at the bottom landing serving a sloped entry.
2. Where a sloped entry is provided for wave action pools, leisure rivers, sand bottom pools, and other pools where user access is limited to one area, the handrails shall not be required to comply with the clear width requirements of *Section 11B*-1009.3.3.
3. Sloped entries in wading pools shall not be required to provide handrails complying with *Section 11B*-1009.3.3. If provided, handrails on sloped entries in wading pools shall not be required to comply with *Section 11B*-505.

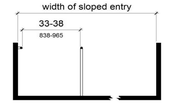

FIGURE *11B*-1009.3.3
HANDRAILS FOR SLOPED ENTRY

***11B*-1009.4 Transfer walls.** Transfer walls shall comply with *Section 11B*-1009.4.

***11B*-1009.4.1 Clear deck space.** A clear deck space of 60 inches (*1524* mm) minimum by 60 inches (*1524* mm) minimum with a slope not steeper than 1:48 shall be provided at the base of the transfer wall. Where one grab bar is provided, the clear deck space shall be centered on the grab bar. Where two grab bars are provided, the clear deck space shall be centered on the clearance between the grab bars.

***11B*-1009.4.2 Height.** The height of the transfer wall shall be 16 inches (*406* mm) minimum and 19 inches (*483* mm) maximum measured from the deck.

FIGURE *11B*-1009.4.2
TRANSFER WALL HEIGHT

***11B*-1009.4.3 Wall depth and length.** The depth of the transfer wall shall be 12 inches (305 mm) minimum and 16 inches (*406* mm) maximum. The length of the transfer wall shall be 60 inches (*1524* mm) minimum and shall be centered on the clear deck space.

***11B*-1009.4.4 Surface.** Surfaces of transfer walls shall not be sharp and shall have rounded edges.

***11B*-1009.4.5 Grab bars.** At least one grab bar complying with *Section 11B-609* shall be provided on the transfer wall. Grab bars shall be perpendicular to the pool wall and shall extend the full depth of the transfer wall. The top of the gripping surface shall be 4 inches (*102* mm) minimum and 6 inches (*152* mm) maximum above transfer walls. Where one grab bar is provided, clearance shall be 24 inches (610 mm) minimum on both sides of the grab bar. Where two grab bars are provided, clearance between grab bars shall be 24 inches (610 mm) minimum.

Exception: Grab bars on transfer walls shall not be required to comply with *Section 11B-609.4*.

***11B*-1009.5 Transfer systems.** Transfer systems shall comply with *Section 11B*-1009.5.

FIGURE *11B*-1009.4.1
CLEAR DECK SPACE AT TRANSFER WALLS

FIGURE *11B*-1009.4.3
DEPTH AND LENGTH OF TRANSFER WALLS

FIGURE *11B*-1009.4.5
GRAB BARS FOR TRANSFER WALLS

***11B*-1009.5.1 Transfer platform.** A transfer platform shall be provided at the head of each transfer system. Transfer platforms shall provide 19 inches (*483* mm) minimum clear depth and 24 inches (610 mm) minimum clear width.

***11B*-1009.5.2 Transfer space.** A transfer space of 60 inches (*1524* mm) minimum by 60 inches (*1524* mm) minimum with a slope not steeper than 1:48 shall be provided at the base of the transfer platform surface and shall be centered along a 24 inch (610 mm) minimum side of the transfer platform. The side of the transfer platform serving the transfer space shall be unobstructed.

FIGURE *11B*-1009.5.1
SIZE OF TRANSFER PLATFORM

FIGURE *11B*-1009.5.2
CLEAR DECK SPACE AT TRANSFER PLATFORM

FIGURE *11B*-1009.5.4
TRANSFER STEPS

FIGURE *11B*-1009.5.6
SIZE OF TRANSFER STEPS

FIGURE *11B*-1009.5.7
GRAB BARS

***11B*-1009.5.3 Height.** The height of the transfer platform shall comply with *Section 11B*-1009.4.2.

***11B*-1009.5.4 Transfer steps.** Transfer step height shall be 8 inches (*203* mm) maximum. The surface of the bottom tread shall extend to a water depth of 18 inches (*457* mm) minimum below the stationary water level.

***11B*-1009.5.5 Surface.** The surface of the transfer system shall not be sharp and shall have rounded edges.

***11B*-1009.5.6 Size.** Each transfer step shall have a tread clear depth of 14 inches (*356* mm) minimum and 17 inches (*432* mm) maximum and shall have a tread clear width of 24 inches (610 mm) minimum.

***11B*-1009.5.7 Grab bars.** At least one grab bar on each transfer step and the transfer platform or a continuous grab bar serving each transfer step and the transfer platform shall be provided. Where a grab bar is provided on each step, the tops of gripping surfaces shall be 4 inches (*102* mm) minimum and 6 inches (*152* mm) maximum above each step and transfer platform. Where a continuous grab bar is provided, the top of the gripping surface shall be 4 inches (*102* mm) minimum and 6 inches (*152* mm) maximum above the step nosing and transfer platform. Grab bars shall comply with *Section 11B-609* and be located on at least one side of the transfer system. The grab bar located at the transfer platform shall not obstruct transfer.

Exception: Grab bars on transfer systems shall not be required to comply with *Section 11B-609.4*.

***11B*-1009.6 Pool stairs.** Pool stairs shall comply with *Section 11B*-1009.6.

***11B*-1009.6.1 Pool stairs.** Pool stairs shall comply with *Section 11B*-504.

Exception: Pool step riser heights shall not be required to be 4 inches (*102* mm) high minimum and 7 inches (*178* mm) high maximum provided that riser heights are uniform.

***11B*-1009.6.2 Handrails.** The width between handrails shall be 20 inches (*508* mm) minimum and 24 inches (610 mm) maximum. Handrail extensions required by *Section 11B*-505.10.3 shall not be required on pool stairs.

***11B*-1010 Shooting facilities with firing positions**

***11B*-1010.1 Turning space.** A circular turning space 60 inches (*1524* mm) diameter minimum with slopes not steeper than 1:48 shall be provided at shooting facilities with firing positions.

THE CITY OF LOS ANGELES OR ITS OFFICERS OR AGENTS SHALL NOT BE RESPONSIBLE FOR THE ACCURACY OR COMPLETENESS OF ELECTRONIC COPIES OF THIS PLAN SHEET.
FILE PATH: A360://Studio City Recreation Center/SCRC-Project Model_Central_Final.rvt
SHEET ISSUE DATE:02/11/16
REVISION DATES: (DESIGN STAGE ONLY)
BUREAU OF ENGINEERING
OFFICIAL RECORD
CITY OF LOS ANGELES
DEPARTMENT OF PUBLIC WORKS
BUREAU OF ENGINEERING
CITY OF LOS ANGELES
NO. REVISION DESCRIPTION DATE BY
BUILDING NO. -
INDEX NO. RP-300106
LICENSED ARCHITECT ROBERT LOMELIN C 23333 REGISTERED STATE OF CALIFORNIA
CITY ENGINEER DATE:
TED ALLEN, PE
ARCHITECTURAL DIVISION
ARCHITECT: ROBERT LOMELIN LIC. NO.: C 23333 1-24-2019
DESIGNED BY: Z. AKHTER, M. CHAVARRIA, A. KIM, M. LAM 1-24-2019
DRAWN BY: Z. AKHTER, M. CHAVARRIA, A. KIM 1-24-2019
CHECKED BY: ROBERT LOMELIN 1-24-2019
APPROVED BY:MAHMOOD KARIMZADEH,AIA, DEPUTY CITY ENGINEER 1-24-2019
CLIENT: DEPARTMENT OF RECREATION AND PARKS
GENERAL MANAGER: MICHAEL A. SHULL
SHEET TITLE: TITLE 24- DISABLED ACCESS REQUIREMENTS
PROJECT: STUDIO CITY RECREATION CENTER
ADDRESS: 12621 RYE STREET, STUDIO CITY, CA 91604
WORK ORDER NO. E170267B
PLAN FILE NO. 860
DRAWING NO. G115
SHEET 23 OF SHEETS 211
PLOTTED:7/1/2019 11:35:30 AM

ENVELOPE MANDATORY MEASURES: NONRESIDENTIAL — ENV-MM

Project Name	Date
Studio City Recreation Center _ Scheme A	*12/18/2018*

DESCRIPTION

Building Envelope Measures:

§110.8(a):	Installed insulating material shall have been certified by the manufacturer to comply with the California Quality Standards for insulating material, Title 20 Chapter 4, Article 3.
§110.8(c):	All Insulating Materials shall be installed in compliance with the flame spread rating and smoke density requirements of Sections 2602 and 707 of Title 24, Part 2.
§110.8(g):	Heated slab floors shall be insulated according to the requirements in Table 110.8-A.
§110.7(a):	All Exterior Joints and openings in the building that are observable sources of air leakage shall be caulked, gasketed, weatherstripped or otherwise sealed.
§110.6(a):	Manufactured fenestration products and exterior doors shall have air infiltration rates not exceeding 0.3 cfm/ft.² of window area, 0.3 cfm/ft.² of door area for residential doors, 0.3 cfm/ft.² of door area for nonresidential single doors (swinging and sliding), and 1.0 cfm/ft.² for nonresidential double doors (swinging).
§110.6(a):	Fenestration U-factor shall be rated in accordance with NFRC 100, or the applicable default U-factor.
§110.6(a) :	Fenestration SHGC shall be rated in accordance with NFRC 200, or NFRC 100 for site-built fenestration, or the applicable default SHGC.
§110.6(b):	Site Constructed Doors, Windows and Skylights shall be caulked between the unit and the building, and shall be weatherstripped (except for unframed glass doors and fire doors).
§120.7(a):	The opaque portions of the roof/ceiling that separates conditioned spaces from unconditioned spaces or ambient air shall meet the applicable U-Factor requirements as follows: **Metal Building**- The weighted average U-factor of the roof assembly shall not exceed 0.098. **Wood Framed and Others**- The weighted average U-factor of the roof assembly shall not exceed 0.075.
§120.7(b):	The opaque portions of walls that separate conditioned spaces from unconditioned spaces or ambient air shall meet the applicable U-factor as follows: **Metal Building**- The weighted average U-factor of the wall assembly shall not exceed 0.113. **Metal Framed**- The weighted average U-factor of the wall assembly shall not exceed 0.151. **Light Mass Walls**- A 6 inch or greater Hollow Core Concrete Masonry Unit shall have a U-factor not to exceed 0.440. **Heavy Mass Walls**- An 8 inch or greater Hollow Core Concrete Masonry Unit shall have a U-factor not to exceed 0.690. **Wood Framed and Others**- The weighted average U-factor of the wall assembly shall not exceed 0.110. **Spandrel Panels and Opaque Curtain Wall**- The weighted average U-factor of the spandrel panels and opaque curtain wall assembly shall not exceed 0.280. **Demising Walls**-. The opaque portions of framed demising walls shall meet the requirements of Item A or B below: A. Wood framed walls shall be insulated to meet a U-factor not greater than 0.099. B. Metal Framed walls shall be insulated to meet a U-factor not greater than 0.151.
§120.7(c):	The opaque portions of floors and soffits that separate conditioned spaces from unconditioned spaces or ambient air shall meet the applicable U-Factor requirements as follows: **Raised Mass Floors**- Shall have a minimum of 3 inches of lightweight concrete over a metal deck or the weighted average U-factor of the floor assembly shall not exceed 0.269. **Other Floors**-The weighted average U-factor of the floor assembly shall not exceed 0.071.

TITLE 24- ENERGY DATA 5

Project Name:	Studio City Recreation Center_Scheme A	NRCC-PRF-01-E	Page 8 of 24
Project Address:	12621 Rye St Studio City 91604	Calculation Date/Time:	16:01, Tue, Dec 18, 2018
Compliance Scope:	NewComplete	Input File Name:	Studio City Recreation Center (Gym)_NR T24 Compliance_2018-12-18.cibd16x

J. FENESTRATION ASSEMBLY SUMMARY — § 110.6 — Confirmed

1. Fenestration Assembly Name / Tag or I.D.	2. Fenestration Type / Product Type / Frame Type	3. Certification Method[1]	4. Assembly Method	5. Area ft²	6. Overall U-factor	7. Overall SHGC	8. Overall VT	9. Status[2]	Pass	Fail
Fixed Window_BuroHappold	VerticalFenestration FixedWindow N/A	NFRC Rated	SiteBuilt	3831	0.36	0.25	0.50	N	☐	☐
Double Metal Clear	VerticalFenestration FixedWindow MetalFraming	Default Performance	SiteBuilt	499	0.71	0.73	0.77	N	☐	☐
Skylight Gym_BuroHappold	Skylight FixedWindow N/A	NFRC Rated	Manufactured	31	0.51	0.19	0.50	N	☐	☐
Skylight Community Rooms_BuroHappold	Skylight FixedWindow N/A	NFRC Rated	Manufactured	3	1.26	0.22	0.50	N	☐	☐

[1] *Newly installed fenestration shall have a certified NFRC Label Certificate or use the CEC default tables found in Table 110.6-A and Table 110.6-B. Center of Glass (COG) values are for the glass-only, determined by the manufacturer, and are shown for ease of verification. Site-built fenestration values are calculated per Nonresidential Appendix NA6 and are used in the analysis.*
[2] *Status: N - New, A – Altered, E – Existing*

Taking compliance credit for fenestration shading devices? (if "Yes", see NRCC-PRF-ENV-DETAILS for more information) — No

K. OPAQUE SURFACE ASSEMBLY SUMMARY — § 120.7/ § 140.3 — Confirmed

1. Surface Name	2. Surface Type	3. Area (ft²)	4. Framing Type	5. Cavity R-Value	6. Continuous R-Value	7. U-Factor / F-Factor / C-Factor	8. Status[1]	Pass	Fail
Metal Wall_BuroHappold6	ExteriorWall	13254	Metal	19	7	U-Factor: 0.080	N	☐	☐
Slab On Grade_BuroHappold15	UndergroundFloor	11755	NA	0	29	F-Factor: 0.730	N	☐	☐
Metal Roof_BuroHappold17	Roof	11755	Metal	19	21	U-Factor: 0.031	N	☐	☐
R-0 Wall Metal Stud58	InteriorWall	340	Metal	0	NA	U-Factor: 0.371	N	☐	☐

[1] *Status: N - New, A – Altered, E – Existing*

TITLE 24- ENERGY DATA 3

Project Name:	Studio City Recreation Center_Scheme A	NRCC-PRF-01-E	Page 1 of 24
Project Address:	12621 Rye St Studio City 91604	Calculation Date/Time:	16:01, Tue, Dec 18, 2018
Compliance Scope:	NewComplete	Input File Name:	Studio City Recreation Center (Gym)_NR T24 Compliance_2018-12-18.cibd16x

A. PROJECT GENERAL INFORMATION

1.	Project Location (city)	Studio City	8. Standards Version	Compliance2016
2.	CA Zip Code	91604	9. Compliance Software (version)	EnergyPro 7.2
3.	Climate Zone	9	10. Weather File	BURBANK-GLENDALE_722880_CZ2010.epw
4.	Total Conditioned Floor Area in Scope	10,259 ft²	11. Building Orientation (deg)	(N) 0 deg
5.	Total Unconditioned Floor Area	1,496 ft²	12. Permitted Scope of Work	NewComplete
6.	Total # of Stories (Habitable Above Grade)	1	13 Building Type(s)	Nonresidential
7.	Total # of dwelling units	0	14 Gas Type	Propane

B. COMPLIANCE RESULTS FOR PERFORMANCE COMPONENTS (Annual TDV Energy Use, kBtu/ft ²-yr) — § 140.1

BUILDING COMPLIES

1. Energy Component	2. Standard Design (TDV)	3. Proposed Design (TDV)	4. Compliance Margin (TDV)	5. Percent Better than Standard
Space Heating	11.56	0.87	10.69	92.5%
Space Cooling	311.57	209.80	101.77	32.7%
Indoor Fans	98.12	64.59	33.53	34.2%
Heat Rejection	--	--	--	--
Pumps & Misc.	2.71	--	2.71	--
Domestic Hot Water	46.36	49.22	-2.86	-6.2%
Indoor Lighting	83.30	97.35	-14.05	-16.9%
COMPLIANCE TOTAL	**553.62**	**421.83**	**131.79**	**23.8%**
Receptacle	59.88	59.88	0.0	0.0%
Process	107.22	107.22	0.0	0.0%
Other Ltg	--	--	--	--
Process Motors	--	--	--	--
TOTAL	**720.72**	**588.93**	**131.8**	**18.3%**

TITLE 24- ENERGY DATA 1

Project Name:	Studio City Recreation Center_Scheme A	NRCC-PRF-01-E	Page 21 of 24
Project Address:	12621 Rye St Studio City 91604	Calculation Date/Time:	16:01, Tue, Dec 18, 2018
Compliance Scope:	NewComplete	Input File Name:	Studio City Recreation Center (Gym)_NR T24 Compliance_2018-12-18.cibd16x

G. MECHANICAL HVAC ACCEPTANCE TESTS & FORMS *(Adapted from 2016-NRCC-MCH-01-E)* — § RA4

Declaration of Required Acceptance Certificates (NRCA) – Acceptance Certificates that may be submitted. (Retain copies and verify forms are completed and signed to post in field for Field Inspector to verify).

Test Description		MCH-02A	MCH-03A	MCH-04A	MCH-05A	MCH-06A	MCH-07A	MCH-08A	MCH-09A	MCH-10A	MCH-11A	MCH-12A	MCH-13A	MCH-14A	MCH-15A	MCH-16A	MCH-17A	MCH-18A	Confirmed	
Equipment Requiring Testing or Verification	# of units	Outdoor Air	Single Zone Unitary	Air Dist. Ducts	Economizer Controls	DCV	Supply Fan VAV	Valve leakage	Supply Water Temp. Reset	Hyd. Variable Flow Control	Auto Demand Shed Control	FDD for DX Units	Auto FDD for Air & Zone	Dist. Energy Storage DX AC	TES Systems	Supply Air Temp. Reset	Condenser Water Reset Controls	ECMS	Pass	Fail
Studio City Recreation Ce1 - SHW	1	--	--	--	--	--	--	--	--	--	--	--	--	--	--	--	--	--	☐	☐
FC-3/1 (Lobby 100)	1	X	X	--	--	X	X	--	--	--	--	--	--	--	--	--	--	--	☐	☐
FC-1/1-2 (Office 101)	2	X	X	--	X	--	X	--	--	--	--	--	--	--	--	--	--	--	☐	☐
AHU1 & 2 W/ VRF HP (Gymna	2	X	--	--	X	X	X	--	--	--	X	X	--	--	--	X	--	--	☐	☐
FC-2/1 (Comm. Room 107)	1	X	X	--	X	--	X	--	--	--	--	--	--	--	--	--	--	--	☐	☐
FC-2/2 (Elec. Room 109)	1	X	X	--	X	--	X	--	--	--	--	--	--	--	--	--	--	--	☐	☐
FC-1.5/1-6 (Community Roo	6	X	X	--	X	X	X	--	--	--	--	--	--	--	--	--	--	--	☐	☐
FC-1/3 (Kitchen 201)	1	X	X	--	X	--	X	--	--	--	--	--	--	--	--	--	--	--	☐	☐

TITLE 24- ENERGY DATA 4

Project Name:	Studio City Recreation Center_Scheme A	NRCC-PRF-01-E	Page 7 of 24
Project Address:	12621 Rye St Studio City 91604	Calculation Date/Time:	16:01, Tue, Dec 18, 2018
Compliance Scope:	NewComplete	Input File Name:	Studio City Recreation Center (Gym)_NR T24 Compliance_2018-12-18.cibd16x

H. CERTIFICATE OF INSTALLATION, CERTIFICATE OF ACCEPTANCE & CERTIFICATE OF VERIFICATION SUMMARY (NRCI/NRCA/NRCV) – Documentation Author to indicate which Certificates must be submitted for the features to be recognized for compliance (Retain copies and verify forms are completed and signed to post in field for Field Inspector to verify). See Tables G. and H. in MCH and LTI Details Sections for Acceptance Tests and forms by equipment. — Confirmed

Building Component	Compliance Forms *(required for submittal)*	Pass	Fail
Covered Process	☐ NRCI-PRC-01-E Covered Processes	☐	☐
	☐ NRCA-PRC-01-F- Compressed Air Systems	☐	☐
	☐ NRCA-PRC-02-F- Kitchen Exhaust	☐	☐
	☐ NRCA-PRC-03-F- Garage Exhaust	☐	☐
	☐ NRCA-PRC-04-F- Refrigerated Warehouse- Evaporator Fan Motor Controls	☐	☐
	☐ NRCA-PRC-05-F- Refrigerated Warehouse- Evaporative Condenser Controls	☐	☐
	☐ NRCA-PRC-06-F- Refrigerated Warehouse- Air Cooled Condenser Controls	☐	☐
	☐ NRCA-PRC-07F- Refrigerated Warehouse- Variable Speed Compressor	☐	☐
	☐ NRCA-PRC-08-F- Electrical Resistance Underslab Heating System	☐	☐

I. ENVELOPE GENERAL INFORMATION (See NRCC-PRF-ENV-DETAILS for more information)

						Confirmed	
1.	Total Conditioned Floor Area	10,259 ft²	5.	Number of Floors Above Grade	1	Pass	Fail
2.	Total Unconditioned Floor Area	1,496 ft²	6.	Number of Floors Below Grade	0		
3.	Addition Conditioned Floor Area	0 ft²					
4.	Addition Unconditioned Floor Area	0 ft²					

7. Opaque Surfaces & Orientation	8. Total Gross Surface Area	9. Total Fenestration Area	10. Window to Wall Ratio	Pass	Fail
North Wall	2,638 ft²	417 ft²	15.8%	☐	☐
East Wall	3,457 ft²	1,311 ft²	37.9%	☐	☐
South Wall	3,215 ft²	2,591 ft²	80.6%	☐	☐
West Wall	2,886 ft²	12 ft²	00.4%	☐	☐
Total	**12,195 ft²**	**4,331 ft²**	**35.5%**	☐	☐
Roof	10,259 ft²	34 ft²	00.3%	☐	☐

TITLE 24- ENERGY DATA 2

THE CITY OF LOS ANGELES OR ITS OFFICERS OR AGENTS SHALL NOT BE RESPONSIBLE FOR THE ACCURACY OR COMPLETENESS OF ELECTRONIC COPIES OF THIS PLAN SHEET.

FILE PATH: A360://Studio City Recreation Center/SCRC-Project Model_Central_Final.rvt

SHEET ISSUE DATE:01/10/19

REVISION DATES (DESIGN STAGE ONLY)

CITY OF LOS ANGELES — DEPARTMENT OF PUBLIC WORKS — BUREAU OF ENGINEERING

ENGINEERING — CITY OF LOS ANGELES

NO.	REVISION DESCRIPTION	DATE	BY

BUILDING NO. –

INDEX NO. **RP-300106**

LICENSED ARCHITECT — TED ALLEN — LIC. NO. C 23333 — REGISTRATION — STATE OF CALIFORNIA

TED ALLEN, PE — DEPARTMENT OF ENGINEERING

		DATE:
CITY ENGINEER		
ARCHITECTURAL DIVISION	LIC. NO.: C 23333	1-24-2019
ARCHITECT: ROBERT LOMELIN		1-24-2019
DESIGNED BY: Z. AKHTER, M. CHAVARRIA, A. KIM, M. LAM		1-24-2019
DRAWN BY: Z. AKHTER, M. CHAVARRIA, A. KIM		1-24-2019
CHECKED BY: ROBERT LOMELIN		1-24-2019
APPROVED BY:MAHMOOD KARIMZADEH,AIA, DEPUTY CITY ENGINEER		1-24-2019

CLIENT: DEPARTMENT OF RECREATION AND PARKS
GENERAL MANAGER: MICHAEL A. SHULL

SHEET TITLE: TITLE 24- ENERGY CALCULATION (REF. ONLY)

PROJECT: STUDIO CITY RECREATION CENTER

ADDRESS: 12621 RYE STREET, STUDIO CITY, CA 91604

BUREAU OF ENGINEERING — OFFICIAL RECORD

WORK ORDER NO. E170267B

PLAN FILE NO. 860

DRAWING NO. **G200**

SHEET 24 OF SHEETS 211

PLOTTED:7/1/2019 11:35:32 AM

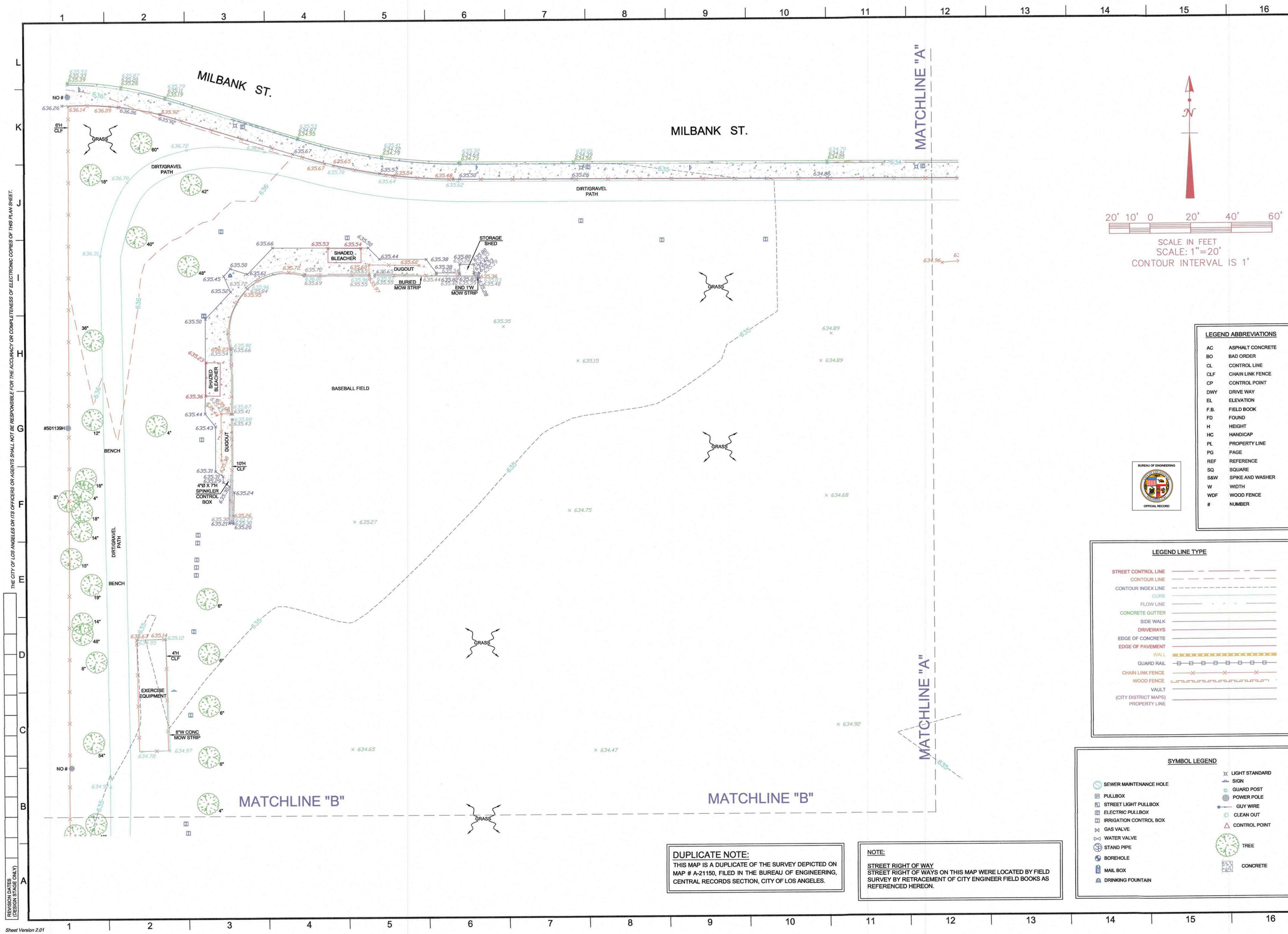

THE CITY OF LOS ANGELES OR ITS OFFICERS OR AGENTS SHALL NOT BE RESPONSIBLE FOR THE ACCURACY OR COMPLETENESS OF ELECTRONIC COPIES OF THIS PLAN SHEET.

REVISION DATES (DESIGN STAGE ONLY)

Sheet Version 2.01

LEGEND ABBREVIATIONS

AC	ASPHALT CONCRETE
BO	BAD ORDER
CL	CONTROL LINE
CLF	CHAIN LINK FENCE
CP	CONTROL POINT
DWY	DRIVE WAY
EL	ELEVATION
F.B.	FIELD BOOK
FD	FOUND
H	HEIGHT
HC	HANDICAP
PL	PROPERTY LINE
PG	PAGE
REF	REFERENCE
SQ	SQUARE
S&W	SPIKE AND WASHER
W	WIDTH
WDF	WOOD FENCE
#	NUMBER

BUREAU OF ENGINEERING — OFFICIAL RECORD

LEGEND LINE TYPE

- STREET CONTROL LINE
- CONTOUR LINE
- CONTOUR INDEX LINE
- CURB
- FLOW LINE
- CONCRETE GUTTER
- SIDE WALK
- DRIVEWAYS
- EDGE OF CONCRETE
- EDGE OF PAVEMENT
- WALL
- GUARD RAIL
- CHAIN LINK FENCE
- WOOD FENCE
- VAULT
- (CITY DISTRICT MAPS) PROPERTY LINE

SYMBOL LEGEND

- SEWER MAINTENANCE HOLE
- PULLBOX
- STREET LIGHT PULLBOX
- *ELECTRIC PULLBOX*
- IRRIGATION CONTROL BOX
- GAS VALVE
- WATER VALVE
- STAND PIPE
- BOREHOLE
- MAIL BOX
- DRINKING FOUNTAIN
- LIGHT STANDARD
- SIGN
- GUARD POST
- POWER POLE
- GUY WIRE
- CLEAN OUT
- CONTROL POINT
- TREE
- CONCRETE

DUPLICATE NOTE:
THIS MAP IS A DUPLICATE OF THE SURVEY DEPICTED ON MAP # A-21150, FILED IN THE BUREAU OF ENGINEERING, CENTRAL RECORDS SECTION, CITY OF LOS ANGELES.

NOTE:
STREET RIGHT OF WAY
STREET RIGHT OF WAYS ON THIS MAP WERE LOCATED BY FIELD SURVEY BY RETRACEMENT OF CITY ENGINEER FIELD BOOKS AS REFERENCED HEREON.

BUREAU OF ENGINEERING
ENGINEERING
CITY OF LOS ANGELES

NO.	REVISIONS:	DATE:	BY:
1-	ADDED 5 SMH's W/INV's ALONG BEEMAN AVE.	12/08/17	SHAWN

SURVEY NO. 32429

INDEX NO. RP-300106

PROFESSIONAL LAND SURVEYOR — MARK E. KNODIG — NO. 7805 — STATE OF CALIFORNIA

BUREAU OF ENGINEERING
DEPARTMENT OF PUBLIC WORKS
CITY OF LOS ANGELES

CITY ENGINEER: TED ALLEN, PE — DATE: 07/30/2019
SURVEY DIVISION — P.L.S: — 03/10/2015
SURVEYOR: MARK KNODIG — 05/01/2015
FIELD SURVEYOR: MICHAEL JOYCE — 05/01/2015
DRAWN BY: MICHAEL VAN EGDOM
CHECKED BY: MICHAEL JOYCE
APPROVED BY: MAHMOOD KARIMZADEH, AIA, DEPUTY CITY ENGINEER — 12-24-2018

VERTICAL CONTROL: F.B. 40298 PGS. 658-662
HORIZONTAL CONTROL: F.B. 40298 PGS. 659-662

SHEET TITLE: SITE SURVEY
PROJECT: STUDIO CITY GYMNASIUM
ADDRESS: 12621 RYE STREET STUDIO CITY, CA 91604

WORK ORDER NO. E170267B
DRAWING NO. 1
SHEET 25 OF 211 SHEETS

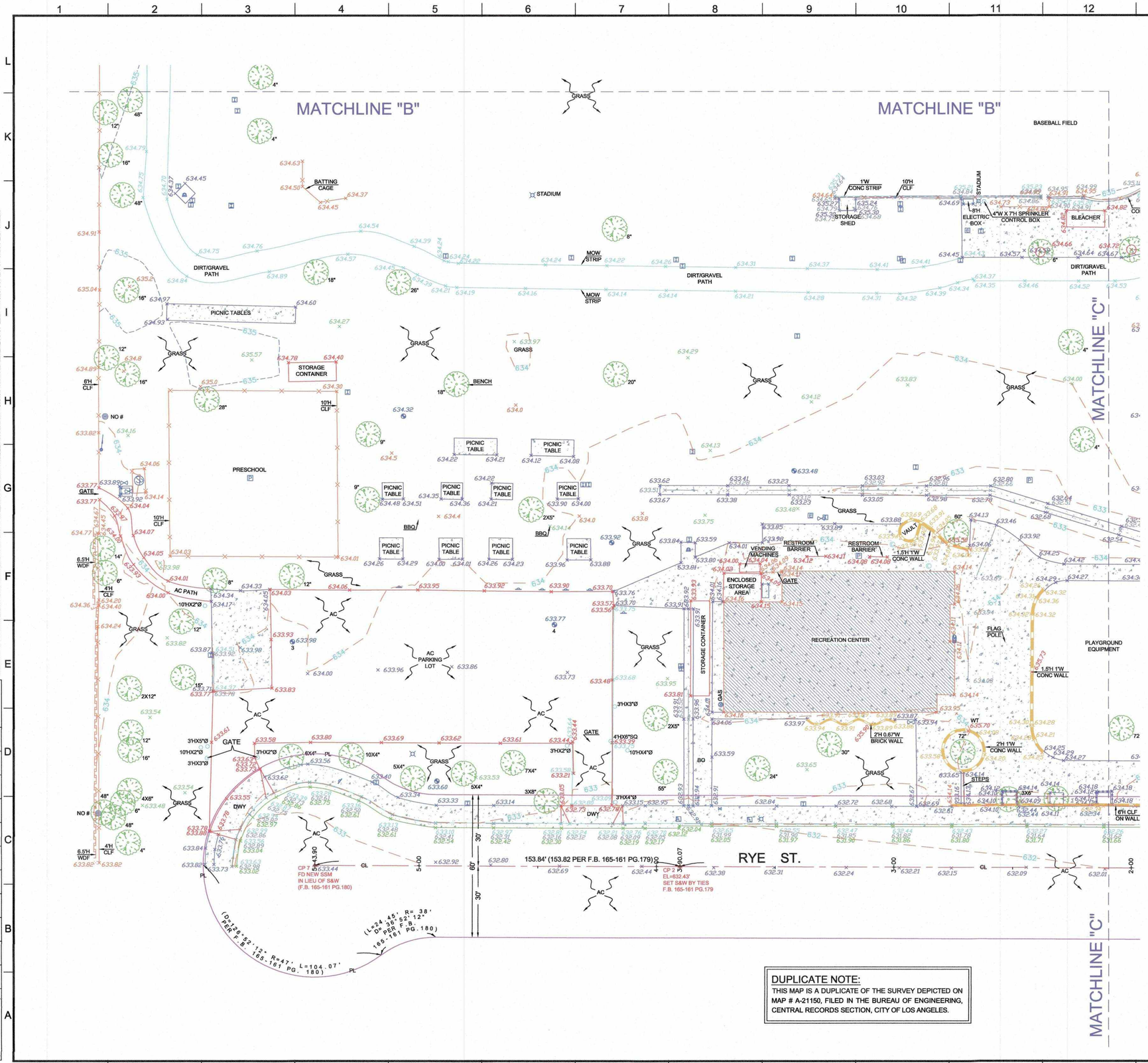

N

20' 10' 0 20' 40' 60'

SCALE IN FEET
SCALE: 1"=20'
CONTOUR INTERVAL IS 1'

BUREAU OF ENGINEERING
OFFICIAL RECORD

LEGEND ABBREVIATIONS

AC	ASPHALT CONCRETE
BO	BAD ORDER
CL	CONTROL LINE
CLF	CHAIN LINK FENCE
CP	CONTROL POINT
DWY	DRIVE WAY
EL	ELEVATION
F.B.	FIELD BOOK
FD	FOUND
H	HEIGHT
HC	HANDICAP
PL	PROPERTY LINE
PG	PAGE
REF	REFERENCE
SQ	SQUARE
S&W	SPIKE AND WASHER
W	WIDTH
WDF	WOOD FENCE
#	NUMBER

LEGEND LINE TYPE

- STREET CONTROL LINE
- CONTOUR LINE
- CONTOUR INDEX LINE
- CURB
- FLOW LINE
- CONCRETE GUTTER
- SIDE WALK
- DRIVEWAYS
- EDGE OF CONCRETE
- EDGE OF PAVEMENT
- WALL
- GUARD RAIL
- CHAIN LINK FENCE
- WOOD FENCE
- VAULT
- (CITY DISTRICT MAPS) PROPERTY LINE

SYMBOL LEGEND

- SEWER MAINTENANCE HOLE
- PULLBOX
- STREET LIGHT PULLBOX
- ELECTRIC PULLBOX
- IRRIGATION CONTROL BOX
- GAS VALVE
- WATER VALVE
- STAND PIPE
- BOREHOLE
- MAIL BOX
- DRINKING FOUNTAIN
- LIGHT STANDARD
- SIGN
- GUARD POST
- POWER POLE
- GUY WIRE
- CLEAN OUT
- CONTROL POINT
- TREE
- CONCRETE

DUPLICATE NOTE:
THIS MAP IS A DUPLICATE OF THE SURVEY DEPICTED ON MAP # A-21150, FILED IN THE BUREAU OF ENGINEERING, CENTRAL RECORDS SECTION, CITY OF LOS ANGELES.

NOTE:
STREET RIGHT OF WAY
STREET RIGHT OF WAYS ON THIS MAP WERE LOCATED BY FIELD SURVEY BY RETRACEMENT OF CITY ENGINEER FIELD BOOKS AS REFERENCED HEREON.

THE CITY OF LOS ANGELES OR ITS OFFICERS OR AGENTS SHALL NOT BE RESPONSIBLE FOR THE ACCURACY OR COMPLETENESS OF ELECTRONIC COPIES OF THIS PLAN SHEET.

REVISION DATES (DESIGN STAGE ONLY)

Sheet Version 2.01

BUREAU OF ENGINEERING
DEPARTMENT OF PUBLIC WORKS
CITY OF LOS ANGELES

ENGINEERING
CITY OF LOS ANGELES

NO.	REVISIONS:	DATE	BY:
1.	ADDED 5 SMH's W/INV's ALONG BEEMAN AVE.	10/09/17	SHAWN

SURVEY NO. 32429

INDEX NO. RP-300106

PROFESSIONAL LAND SURVEYOR * MARK E. KINDIG * NO. 7805 * STATE OF CALIFORNIA

CITY ENGINEER: TED ALLEN, PE

SURVEY DIVISION	DATE:
SURVEYOR: MARK KINDIG	07/30/2019
P.L.S.:	03/10/2015
FIELD SURVEYOR: MICHAEL JOYCE	05/01/2015
DRAWN BY: MICHAEL VAN EGDOM	05/01/2015
CHECKED BY: MICHAEL JOYCE	05/01/2015
APPROVED BY: MAHMOOD KARIMZADEH, AIA, DEPUTY CITY ENGINEER	01-24-2019

VERTICAL CONTROL: F.B. 40268 PGS. 659-662
HORIZONTAL CONTROL: F.B. 40268 PGS. 659-662

SHEET TITLE: SITE SURVEY

PROJECT: STUDIO CITY GYMNASIUM

ADDRESS: 12021 RYE STREET
STUDIO CITY, CA 91604

WORK ORDER NO. E170267B

DRAWING NO. 2

SHEET 26 OF 211 SHEETS

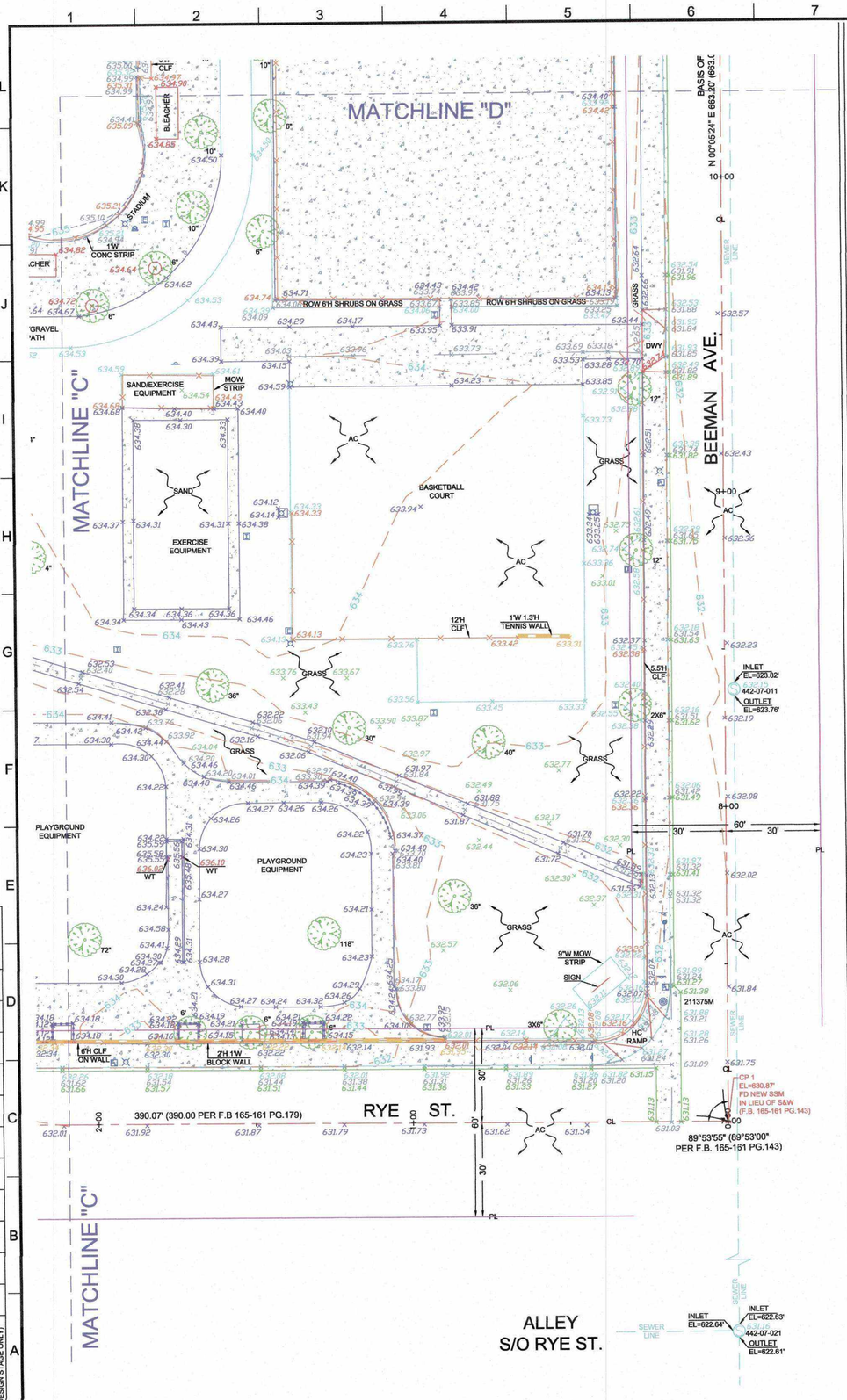

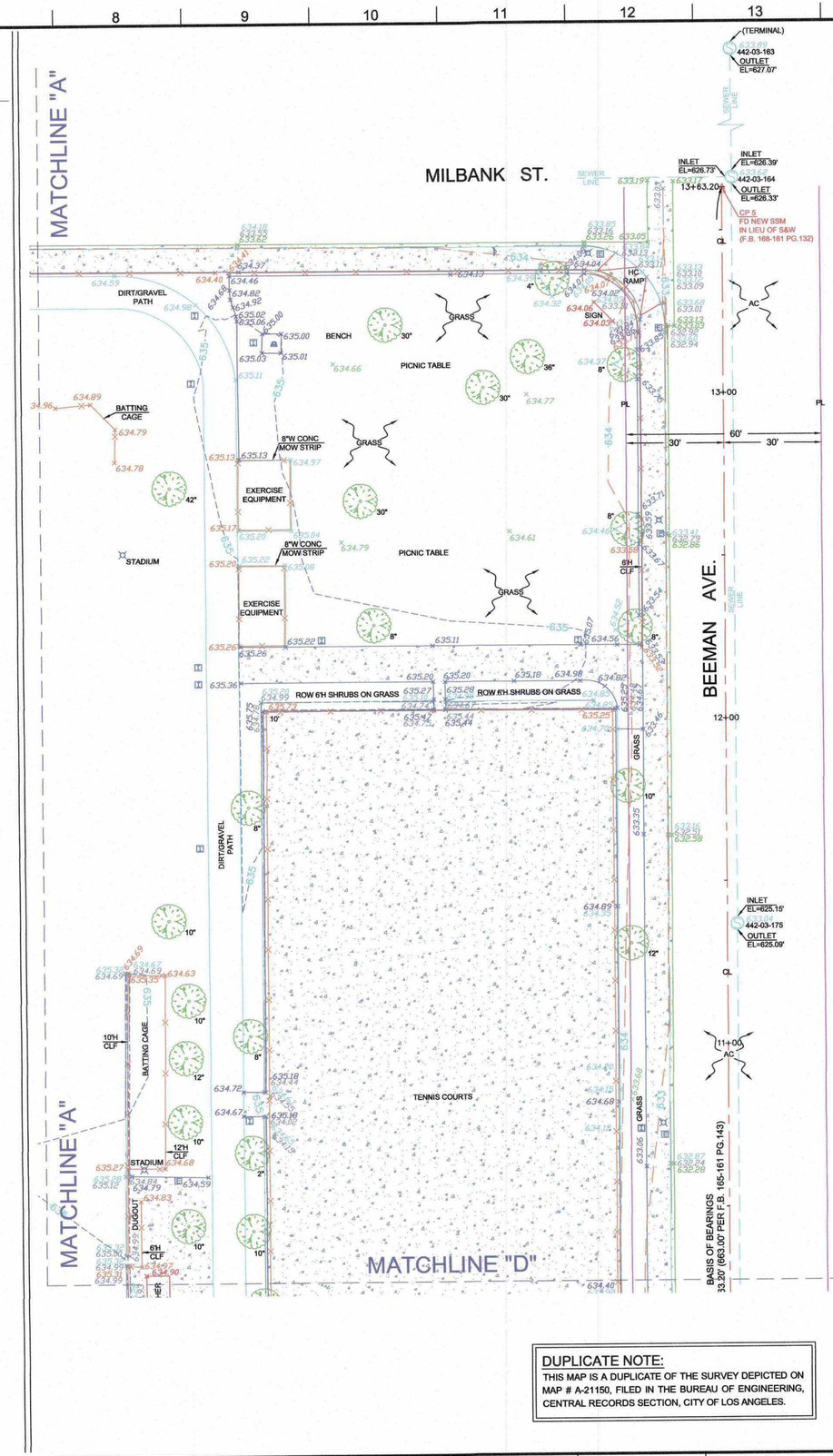

20' 10' 0 20' 40' 60'

SCALE IN FEET
SCALE: 1"=20'
CONTOUR INTERVAL IS 1'

BUREAU OF ENGINEERING
OFFICIAL RECORD

LEGEND ABBREVIATIONS

AC	ASPHALT CONCRETE
BO	BAD ORDER
CL	CONTROL LINE
CLF	CHAIN LINK FENCE
CP	CONTROL POINT
DWY	DRIVE WAY
EL	ELEVATION
F.B.	FIELD BOOK
FD	FOUND
H	HEIGHT
HC	HANDICAP
PL	PROPERTY LINE
PG	PAGE
REF	REFERENCE
SQ	SQUARE
S&W	SPIKE AND WASHER
W	WIDTH
WDF'	WOOD FENCE
#	NUMBER

LEGEND LINE TYPE

- STREET CONTROL LINE
- CONTOUR LINE
- CONTOUR INDEX LINE
- CURB
- FLOW LINE
- CONCRETE GUTTER
- SIDE WALK
- DRIVEWAYS
- EDGE OF CONCRETE
- EDGE OF PAVEMENT
- WALL
- GUARD RAIL
- CHAIN LINK FENCE
- WOOD FENCE
- VAULT
- (CITY DISTRICT MAPS) PROPERTY LINE

SYMBOL LEGEND

- SEWER MAINTENANCE HOLE
- PULLBOX
- STREET LIGHT PULLBOX
- ELECTRIC PULLBOX
- IRRIGATION CONTROL BOX
- GAS VALVE
- WATER VALVE
- STAND PIPE
- BOREHOLE
- MAIL BOX
- DRINKING FOUNTAIN
- LIGHT STANDARD
- SIGN
- GUARD POST
- POWER POLE
- GUY WIRE
- CLEAN OUT
- CONTROL POINT
- TREE
- CONCRETE

DUPLICATE NOTE:
THIS MAP IS A DUPLICATE OF THE SURVEY DEPICTED ON MAP # A-21150, FILED IN THE BUREAU OF ENGINEERING, CENTRAL RECORDS SECTION, CITY OF LOS ANGELES.

NOTE:
STREET RIGHT OF WAY
STREET RIGHT OF WAYS ON THIS MAP WERE LOCATED BY FIELD SURVEY BY RETRACEMENT OF CITY ENGINEER FIELD BOOKS AS REFERENCED HEREON.

THE CITY OF LOS ANGELES OR ITS OFFICERS OR AGENTS SHALL NOT BE RESPONSIBLE FOR THE ACCURACY OR COMPLETENESS OF ELECTRONIC COPIES OF THIS PLAN SHEET.

REVISION DATES (DESIGN STAGE ONLY)

Sheet Version 2.01

BUREAU OF ENGINEERING
ENGINEERING
CITY OF LOS ANGELES

NO.	REVISIONS:	DATE:	BY:
1	ADDED 5 SMPL WINYL ALONG BEEMAN AVE.	10/08/17	SHAWN

SURVEY NO. 32429

INDEX NO. RP-300106

LAND SURVEYOR * C. KINDIG * NO. 7805 * PROFESSIONAL * STATE OF CALIFORNIA

CITY OF LOS ANGELES
DEPARTMENT OF PUBLIC WORKS

CITY ENGINEER: TED ALLEN, PE — DATE: 07/30/2019
SURVEY DIVISION — P.L.S.: 03/10/2015
SURVEYOR: MARK KINDIG — 05/01/2015
FIELD SURVEYOR: MICHAEL JOYCE — 05/01/2015
DRAWN BY: MICHAEL VAN EGDOM — 11-24-2015
CHECKED BY: MICHAEL JOYCE
APPROVED BY: MAHMOOD KARIMZADEH, AIA, DEPUTY CITY ENGINEER

VERTICAL CONTROL: F.B. 40298 PGS. 659-662
HORIZONTAL CONTROL: F.B. 40298 PGS. 659-662

SHEET TITLE: SITE SURVEY
PROJECT: STUDIO CITY GYMNASIUM
ADDRESS: 12621 RYE STREET STUDIO CITY, CA 91604

WORK ORDER NO. E170267B
DRAWING NO. 3
SHEET 27 OF 211 SHEETS

GENERAL NOTES:

1. ALL WORK PERFORMED IN THIS CONTRACT SHALL CONFORM TO:

   A. THE PROJECT SPECIFICATIONS AND ALL SAFETY REGULATION; CODES AND REQUIREMENTS PERTINENT TO THE PROJECT CONSTRUCTION.

   B. THE LATEST EDITION AND SUPPLEMENTS OF THE STANDARD SPECIFICATIONS FOR PUBLIC WORKS CONSTRUCTION (SSPWC) AND AMERICAN PUBLIC WORKS ASSOCIATION (APWA).

   C. CITY OF LOS ANGELES STANDARD PLANS AND SPECIFICATIONS.

   D. PROJECT GEOTECHNICAL REPORT.

2. IT IS THE RESPONSIBILITY OF THE CONTRACTOR TO BE KNOWLEDGEABLE TO INTERPRET AND APPLY THE ABOVE CODES AND SPECIFICATIONS.

3. ALL WORK SHALL COMPLY WITH THE REQUIREMENTS OF THE WORK SPECIFIED ON THE DRAWINGS, SPECIFICATIONS AND WITHIN THE VARIOUS NOTES SHOWN HEREIN.

4. THE EXISTING CONDITIONS SHOWN DIAGRAMMATICALLY ON THE PLANS ORIGINATED FROM AS BUILT DRAWINGS AND FIELD SURVEY. IT SHALL BE THE RESPONSIBILITY OF THE CONTRACTOR TO VISIT THE JOB SITE AND VERIFY THE EXACT EXISTING CONDITIONS BEFORE SUBMITTING HIS/HER BID. ANY DISCREPANCY SHALL BE REPORTED IMMEDIATELY TO THE CITY ENGINEER FOR PROPER ACTION.

5. THE CONTRACTOR SHALL PROTECT ALL EXISTING STRUCTURES IN THE AREA OF WORK WHICH ARE NOT INCLUDED IN THIS CONSTRUCTION. ANY DAMAGE RESULTING FROM THIS WORK SHALL BE REPAIRED AND/OR REPLACED AT NO ADDITIONAL COST TO THE CITY.

6. UNCLOG, CLEAN AND FLUSH THE ENTIRE SITE DRAINAGE SYSTEM AFTER PAVING AND IMMEDIATELY BEFORE A RAIN FORECAST.

7. ALL EXISTING STREET IMPROVEMENTS, UNLESS OTHERWISE INDICATED HEREIN TO BE REMOVED, SHALL BE PROTECTED IN PLACE. THESE ITEMS INCLUDE LIGHT POLES, POWER POLES, SIGNAL POLES AND APPURTENANCES.

8. CONTRACTOR SHALL NOTIFY ALL UTILITY OWNERS BOTH IN PRIVATE PROPERTY AND IN PUBLIC RIGHT-OF-WAY FOR EXISTING LATERALS TO BE REMOVED OR CAPPED.

9. UTILITIES TO BE VERIFIED IN FIELD TO ENSURE EXISTING UTILITY TO REMAIN. CONTRACTOR IS RESPONSIBLE FOR THE RELOCATION, IF REQUIRED. ALL EXISTING/RELOCATED UTILTIES PER NEW SITE LAYOUT WILL BE PROTECTED IN PLACE.

   UNDERGROUND SERVICE ALERT:

10. BEFORE COMMENCING ANY EXCAVATION ON-SITE AND OFF-SITE, THE CONTRACTOR SHALL OBTAIN AN UNDERGROUND SERVICE ALERT INQUIRY I.D. NUMBER BY CALLING 1-800-422-4133. TWO WORKING DAYS SHALL BE ALLOWED AFTER THE I.D. NUMBER IS OBTAINED AND BEFORE THE EXCAVATION WORK IS STARTED THAT UTILITY COMPANIES CAN BE NOTIFIED.

    PROTECTION AND RESTORATION OF EXISTING IMPROVEMENTS:

11. THE CONTRACTOR SHALL BE RESPONSIBLE FOR THE PROTECTION OF PUBLIC AND PRIVATE PROPERTY ADJACENT TO THE WORK PER SECTION 7-9 OF THE STANDARD SPECIFICATIONS FOR PUBLIC WORKS CONSTRUCTION.

    REMOVALS:

12. EXISTING STRUCTURES AND SUBSTRUCTURES WHICH ARE INDICATED TO BE REMOVED IN THIS CONSTRUCTION DOCUMENTS SHALL BE TOTALLY REMOVED AND DISPOSED OF OFFSITE, UNLESS OTHERWISE INDICATED. EXISTING FACILITIES WHICH ARE DISCOVERED DURING CONSTRUCTION (INCLUDING WALLS, FOOTINGS, AND FOUNDATIONS) SHALL BE REPORTED TO AND COORDINATED WITH THE GEOTECHNICAL ENGINEER OF RECORD AS TO THEIR REMOVAL. NOTIFY THE CITY ENGINEER IN WRITING PRIOR TO COMMENCING THE WORK.

13. ALL SITE PREPARATION AS INDICATED SHALL BE MADE UNDER THE CONTINUOUS INSPECTION OF THE GEOTECHNICAL ENGINEER. SECURE THE REQUIRED PERMITS FROM THE CALIFORNIA DIVISION OF INDUSTRIAL SAFETY FOR THE CONSTRUCTION OF TRENCHES, SHORING OR EXCAVATIONS WHICH ARE 5 FEET OR DEEPER OR WORK THAT MAY JEOPARDIZE THE SAFETY OF WORKERS. SHORING CALCULATIONS SHALL BE PROVIDED BY THE CONTRACTOR AT HIS EXPENSE AS REQUIRED FOR APPROVAL AND PERMITTING.

14. THE CONTRACTOR SHALL KEEP THE CONSTRUCTION AREA SUFFICIENTLY DAMPENED TO CONTROL DUST CAUSED BY WORK ACTIVITIES AS REQUIRED BY THE CITY ENGINEER. THE CONTRACTOR SHALL PROVIDE 6' HIGH TEMPORARY FENCING WITH VISUAL BARRIER AROUND THE PROJECT LIMITS AND A TEMPORARY CONSTRUCTION ACCESS ON-SITE.

15. ALL WORK IN THE PUBLIC RIGHT OF WAY REQUIRES APPROVAL BY THE CITY OF LOS ANGELES DEPARTMENT OF TRANSPORTATION AND PUBLIC WORKS BEFORE CONSTRUCTION BEGINS. CONTRACTOR SHALL SECURE AND PAY FOR ALL PERMITS INCLUDING UTILITY CONNECTIONS REQUIRED PRIOR TO CONSTRUCTION.

16. VOIDS RESULTING FROM REMOVAL OF STRUCTURES SHALL BE FILLED WITH SUITABLE MATERIALS APPROVED BY THE GEOTECHNICAL ENGINEER AND COMPACTED TO 95% MINIMUM DENSITY PER ASTM D-1557 AND THE RECOMMENDATIONS WITHIN THE SOILS ENGINEERING EXPLORATION REPORT.

17. UPON COMPLETION OF PROJECT, CONTRACTOR SHALL REMOVE EXISTING CONSTRUCTION FENCING, APPURTENANCES AND OFFICE TRAILERS FROM THE SITE. PAVEMENT SHALL BE PATCHED AND REPAIRED TO MATCH ADJACENT PAVEMENT AND APPROVED BY THE CITY ENGINEER AS APPLICABLE.

18. ANY ADDITIONAL SURVEYS OR TESTING AS A RESULT OF CONTRACTOR ERROR OR MISINFORMATION WILL BE CHARGED TO THE CONTRACTOR.

19. THE CONSTRUCTION SHALL NOT RESTRICT A FIVE FOOT CLEAR AND UNOBSTRUCTED ACCESS TO ANY WATER OR POWER DISTRIBUTION FACILITIES (POWER POLES, PULL-BOXES, TRANSFORMERS, VAULTS, PUMPS, VALVES, METERS, APPURTENANCES, ETC.) OR TO THE LOCATION OF THE HOOK UP, THE CONSTRUCTION SHALL NOT BE WITHIN TEN FEET OF ANY POWER LINES WHETHER OR NOT THE LINES ARE LOCATED ON THE PROPERTY. FAILURE TO COMPLY MAY CAUSE CONSTRUCTION DELAYS AND/OR ADDITIONAL EXPENSES.

20. FILL AND BACKFILL SHALL BE MOISTURE CONDITIONED, PLACED AND COMPACTED IN ACCORDANCE WITH THE REQUIREMENTS OF THE GEOTECHNICAL REPORT. ANY IMPORTED SOIL SHALL BE INSPECTED AND APPROVED AT THE BORROW SITE BY THE GEOTECHNICAL ENGINEER AND TESTED PRIOR TO ITS IMPORT. AT LEAST THREE (3) DAYS ADVANCE NOTICE IS REQUIRED TO FACILITATE SCHEDULING.

GENERAL NOTES CONT'D:

21. TRIM TREE ROOTS AS NECESSARY OR GRADED ON AREAS TO BE PAVED. TRIM ROOTS UNDER THE DIRECTION OF A CERTIFIED CITY APPROVED ARBORIST. NOTIFY THE CITY ENGINEER PRIOR TO TRIMMING OF TREES.

22. ADJUST TO GRADE EXISTING MANHOLE RIMS, VALVE BOXES AND ELECTRICAL VAULT LIDS TO DESIGN GRADES WITHIN THE IMPROVEMENT AREA, UNLESS NOTED OTHERWISE. CONTRACTOR TO VERIFY LOCATION AND NUMBER OF MANHOLE RIMS, VALVE BOXES AND ELECTRICAL VAULT LIDS IN THE FIELD PRIOR TO BIDDING.

23. IF EXISTING UTILITIES ARE EXPOSED OR DETERMINED TO EXIST UNDER THE ROUGH GRADING SITE, CONTRACTOR SHALL PROVIDE A FLAGGED STAKE THAT INDICATE THEIR LOCATION, TYPE OF UTILITY, SIZE, PIPE MATERIAL, AND DEPTH. STAKES SHALL BE INSTALLED NO LESS THAN 50' ON CENTER ON STRAIGHT LINES AND AT BENDS.

24. SITE BOUNDARIES, EASEMENTS, DRAINAGE DEVICES AND RESTRICTED USE AREAS SHALL BE LOCATED PER CONSTRUCTION STAKING BY A LICENSED SURVEYOR PAID FOR BY THE CONTRACTOR. PRIOR TO GRADING, AS REQUESTED BY THE CITY ENGINEER, ALL PROPERTY LINES, EASEMENTS, AND RESTRICTED USE AREAS SHALL BE STAKED.

25. IT IS THE RESPONSIBILITY OF THE CONTRACTOR TO PROVIDE THE CITY ENGINEER WITH A COMPLETE SET OF REPRODUCIBLE & RED MARKED PRINT "AS-BUILT" DRAWINGS OF ALL WORK PERFORMED UNDER THIS CONTRACT, AS SHOWN WITHIN THESE CONSTRUCTION DRAWINGS. ALL FIELD CHANGES SHALL BE SHOWN IN DETAIL ON THE "AS-BUILT" DRAWINGS AND SHALL INCORPORATE AS A MINIMUM, NEW ELEVATIONS, GRADES AND ALIGNMENT OF UNDERGROUND FACILITIES WITH DIMENSIONAL TIES TO BUILDING OR OTHER VISIBLE IMPROVEMENTS.

26. CONTRACTOR IS RESPONSIBLE FOR THE RESTORATION TO THEIR EXISTING CONDITION OF THE FACILITIES WHICH WERE INTENDED TO REMAIN IN PLACE. AND ALL REPAIRS TO ANY DAMAGED MATERIALS OR FACILITIES SHALL BE MADE BY THE CONTRACTOR AT NO ADDITIONAL COST TO THE CITY.

27. CONSTRUCT OFFSITE WORK TO COMPLY WITH THE REQUIREMENTS OF THE LOCAL GOVERNING AGENCY. CONTRACTOR TO SECURE AND PAY FOR ALL REQUIRED CONSTRUCTION PERMITS.

GENERAL GEOTECHNICAL NOTES:

1. ALL WORK MUST BE IN COMPLIANCE WITH THE RECOMMENDATIONS INCLUDED IN THE GEOTECHNICAL CONSULTANT'S REPORT(S) AND THE APPROVED GRADING PLANS AND SPECIFICATIONS.

2. SITE GEOTECHNICAL INVESTIGATION WAS PREPARED BY GEOTECHNICAL ENGINEERING GROUP W.O. #E170267A, GEO FILE #14-134 DATED AUGUST 12, 2015, ENTITLED "GEOTECHNICAL ENGINEERING REPORT FOR STUDIO CITY GYM WITH ADDRESS 12621 RYE STREET (TRACT: TR 1000, BLOCK: NONE, LOT: 209) STUDIO CITY, CALIFORNIA. RECOMMENDATIONS OF THE SOILS REPORT ARE PART OF THIS NOTE AND SHALL BE PERFORMED BY THE CONTRACTOR AS APPLICABLE. REFER TO SHEET G006.

3. THE GEOTECHNICAL ENGINEER IS TO APPROVE THE KEY OR BOTTOM OF EXCAVATION AND LEAVE A CERTIFICATE ON THE SITE FOR THE CITY INSPECTOR. THE CITY INSPECTOR IS TO BE NOTIFIED BEFORE ANY GRADING BEGINS AND FOR BOTTOM INSPECTION BEFORE FILL IS PLACED. FILL MAY NOT BE PLACED WITHOUT THE APPROVAL OF THE CITY INSPECTOR.

4. THE GEOTECHNICAL ENGINEER SHALL PROVIDE SUFFICIENT INSPECTIONS DURING THE PREPARATION OF THE NATURAL GROUND AND THE PLACEMENT AND COMPACTION OF THE FILL TO BE SATISFIED THAT THE WORK IS BEING PERFORMED IN ACCORDANCE WITH THE PLAN AND APPLICABLE CODE REQUIREMENTS.

5. ROUGH GRADING MUST CONFORM TO THE FINAL ENGINEERING GEOLOGY AND SOILS ENGINEERING REPORT. CONTRACTOR MUST REQUEST A GEOLOGIC APPROVED REPORT FROM THE SOILS ENGINEER FOR SUBMITTAL TO THE OAR.

6. FOUNDATION AND WALL EXCAVATIONS MUST BE INSPECTED AND APPROVED BY THE GEOTECHNICAL ENGINEER, PRIOR TO THE PLACING OF STEEL OR CONCRETE.

7. THE EXISTING SOIL IN THE UPPER 5 FEET WITHIN THE FOOTPRINT OF THE STRUCTURAL MAT SHALL BE REMOVED. THE EXCAVATION SHOULD EXTEND 3 FEET LATERALLY BEYOND THE EDGES OF THE THICKENED EDGE. THE EXCAVATION BOTTOM SHALL BE APPROVED BY GEOTECHNICAL ENGINEER AND THE LADBS GRADING INSPECTOR PRIOR TO FILL PLACEMENT.

8. COMPACTED FILL SHALL EXTEND BEYOND THE FOOTINGS A MINIMUM DISTANCE EQUAL TO THE DEPTH OF THE FILL BELOW THE BOTTOM OF THE FOOTING OR A MINIMUM OF THREE FEET WHICHEVER IS GREATER.

9. THE SOIL BENEATH NEW PAVEMENTS AND SITE WALLS UP TO 8-FEET HIGH SHALL BE EXCAVATED TO A DEPTH OF 18 INCHES BELOW EXISTING GRADE OR DESIGN SUBGRADE ELEVATION, WHICHEVER IS DEEPER. THE EXCAVATION SHALL EXTEND LATERALLY BEYOND THE EDGES OF THE SLAB OR FOOTINGS A MINIMUM DISTANCE OF 2 FEET. FOR NEW SITE WALLS, THE OVER-EXCAVATION AND RECOMPACTION SHALL RESULT IN AT LEAST 1 FOOT OF COMPACTED FILL BENEATH THE FOOTINGS. FOR NEW PAVEMENTS, THE OVER-EXCAVATION AND RECOMPACTION SHALL RESULT IN AT LEAST 1 FOOT OF COMPACTED SUBGRADE BENEATH THE PAVEMENT SECTION, WHICH INCLUDES THE AGGREGATE BASE AND ASPHALT.

10. THE SOIL BENEATH NEW FLATWORK SHOULD BE OVER EXCAVATED TO A DEPTH OF 12 INCHES BELOW SUBGRADE ELEVATION. THE EXCAVATION SHOULD EXTEND LATERALLY BEYOND THE EDGES OF THE SLAB A MINIMUM DISTANCE OF 12 INCHES.

11. ALL IMPORTED FILL SHALL BE OBSERVED, TESTED AND APPROVED BY THE GEOTECHNICAL ENGINEERING DIVISION – BOE PRIOR TO IMPORTING TO SITE. IMPORT MATERIAL FOR USE AS FILL SHALL BE PREDOMINANTLY GRANULAR, NON-EXPANSIVE, AND SHALL BE FREE OF ORGANIC AND INORGANIC DEBRIS, CONTAMINATION AND MATERIALS WITH ANY DIMENSION LARGER THAN 3 INCHES.

12. FILL MATERIALS SHALL CONSIST OF THE ONSITE SOILS OR APPROVED IMPORT SOIL. IMPORT SOIL SHALL BE PREDOMINANTLY GRANULAR, NON-EXPANSIVE, AND SHALL BE FREE OF ORGANIC OR INORGANIC DEBRIS, CONTAMINATION AND MATERIALS WITH ANY DIMENSION LARGER THAN 3 INCHES. FILL MATERIALS SHALL BE PLACED IN LOOSE LIFTS NOT EXCEEDING 8 INCHES IN THICKNESS, MOISTURE-CONDITIONED TO WITHIN 3 PERCENT ABOVE THE OPTIMUM MOISTURE CONTENT, AND MECHANICALLY COMPACTED. CLAYEY SOILS PLACED IN BUILDING AREAS SHALL BE COMPACTED TO A MINIMUM OF 90 PERCENT RELATIVE COMPACTION, AS DETERMINED BY ASTM TEST METHOD D1557. NON-CLAYEY SOILS PLACED IN THE BUILDING AREA SHALL BE COMPACTED TO A MINIMUM OF 95 PERCENT RELATIVE COMPACTION. SECONDARY OR NON-STRUCTURAL FILL SHALL BE COMPACTED TO A MINIMUM OF 90 PERCENT RELATIVE COMPACTION. ANY AGGREGATE BASE SHOULD BE MOISTURE CONDITIONED TO WITHIN 3 PERCENT ABOVE OPTIMUM AND COMPACTED TO A MINIMUM OF 95 PERCENT RELATIVE COMPACTION.

13. UTILITY TRENCHES SHOULD BE PROPERLY BACKFILLED IN ACCORDANCE WITH THE REQUIREMENTS OF THE GREEN BOOK (LATEST EDITION). THE PIPE SHOULD BE BEDDED WITH CLEAN SANDS (SAND EQUIVALENT TO OR GREATER THAN 30) TO A DEPTH OF AT LEAST ONE FOOT OVER PIPE.

14. TRENCH EXCAVATIONS FOR UTILITY PIPES MAY BE BACKFILLED WITH ONSITE SOILS UNDER THE OBSERVATION OF A GEOTECHNICAL ENGINEER. AFTER UTILITY PIPES HAVE BEEN LAID, PROPERLY BEDDED, AND COVERED PER THE PROJECT SPECIFICATIONS, THEY SHALL BE BACKFILLED TO THE GROUND SURFACE OR DESIGN SUBGRADE WITH CONTROLLED BACKFILL. CONTROLLED BACKFILL SHALL BE MOISTURE CONDITIONED, PLACED AND COMPACTED. DENSIFICATION BY FLOODING OR JETTING IS NOT ALLOWED.

FILL NOTES:

1. FILL SHALL NOT BE PLACED UNTIL STRIPPING OF VEGETATION, REMOVAL OF UNSUITABLE SOILS, AND INSTALLATION OF SUBDRAIN (IF ANY) HAVE BEEN INSPECTED AND APPROVED BY THE SOIL ENGINEER. THE CITY ENGINEER MAY REQUIRE A "STANDARD TEST METHOD FOR MOISTURE, ASH, ORGANIC MATTER, PEAT OR OTHER ORGANIC SOILS" ASTM D-2974-87 ON ANY SUSPECT MATERIAL. DETRIMENTAL AMOUNTS OF ORGANIC MATERIAL SHALL NOT BE PERMITTED IN FILLS. SOIL CONTAINING SMALL AMOUNTS OF ROOTS MAY BE ALLOWED PROVIDED THAT THE ROOTS ARE IN A QUANTITY AND DISTRIBUTED IN A MANNER THAT WILL NOT BE DETRIMENTAL TO THE FUTURE USE OF THE SITE AND THE GEOTECHNICAL ENGINEER APPROVED THE USE OF SUCH MATERIAL.

2. NO FILL TO BE PLACED, UNTIL THE GEOTECHNICAL ENGINEER OR CITY ENGINEER HAS INSPECTED AND APPROVED THE BOTTOM OF EXCAVATION. FILL MATERIAL INCLUDING BASE MATERIAL SHALL BE OBTAINED FROM A DESIGNATED ON-SITE STOCKPILE AREAS, AS DIRECTED BY THE OAR. ANY ADDITIONAL IMPORT FILL MATERIAL SHALL HAVE AN EXPANSION INDEX OF LESS THAN "20". IN NO CASE SHALL ON-SITE CLAY SOILS BE PLACED IN THE UPPER 12 INCHES BENEATH CONCRETE SLABS AND WALKS AND BEHIND RETAINING WALLS AS DIRECTED IN THE GEOTECHNICAL INVESTIGATION REPORT.

3. FOR ONSITE OR NATIVE SOILS, THE GEOTECHNICAL ENGINEER SHOULD BE PRESENT TO REVIEW THE TYPES OF MATERIALS ENCOUNTERED IN THE EXCAVATIONS IN ORDER TO CONFIRM THEIR RE-USABILITY.

4. IMPORTED FILLS SHOULD BE PREDOMINANTLY GRANULAR 35% OR LESS PASSING THE #200 SIEVE), NON-EXPANSIVE (EI LESS THAN 20), AND LESS THAN 3 INCHES IN ANY DIMENSION AND BE FREE OF ORGANIC DEBRIS. ALL FILL MATERIALS SHOULD BE OBSERVED AND TESTED BY THE GEOTECHNICAL ENGINEER PRIOR TO THEIR USE.

5. ALL SUBDRAIN OUTLETS ARE TO BE SURVEYED FOR LINE AND ELEVATION. SUBDRAIN INFORMATION MUST BE SHOWN ON AN "AS BUILT" GRADING PLAN.

6. FILL COMPACTION SHALL BE TESTED AND RECORDED BY THE GEOTECHNICAL ENGINEER. COMPACTED FILL SOILS SHOULD BE KEPT MOIST (AT OR SLIGHTLY ABOVE THE SPECIFIED MOISTURE CONTENT AT THE TIME OF COMPACTION), BUT NOT FLOODED, UNTIL COVERED WITH SUBSEQUENT CONSTRUCTION. IF COMPACTED FILL SOILS BECOME SOFTENED OR ERODED BY EXCESSIVE MOISTURE, THEY SHALL BE REPLACED AND RECOMPACTED AT THE DISCRETION OF THE GEOTECHNICAL ENGINEER BEFORE ADDITIONAL FILL OR CONSTRUCTION IS PLACED. CERTIFICATION AND INSPECTION APPROVALS FOR COMPROMISED SOILS ARE VOID AND INVALID.

SHEET INDEX

CIVIL:

C100 GENERAL NOTES
C101 GENERAL NOTES
C102 DEMOLITION PLAN
C103 DEMOLITION PLAN
C200 COMPOSITE SITE CONTROL PLAN
C201 SITE CONTROL PLAN
C202 SITE CONTROL PLAN
C300 COMPOSITE GRADING PLAN
C301 GRADING PLAN
C302 GRADING PLAN
C303 GRADING SECTIONS
C304 GRADING SECTIONS
C400 COMPOSITE UTILITY PLAN
C401 ENLARGED UTILITY DETAILS
C402 ENLARGED UTILITY DETAILS
C500 MISCELLANEOUS DETAILS
C501 MISCELLANEOUS DETAILS
C502 MISCELLANEOUS DETAILS
C503 MISCELLANEOUS DETAILS
C504 MISCELLANEOUS DETAILS
C505 MISCELLANEOUS DETAILS
C506 MISCELLANEOUS DETAILS
C600 EROSION CONTROL PLAN
C601 EROSION CONTROL DETAILS

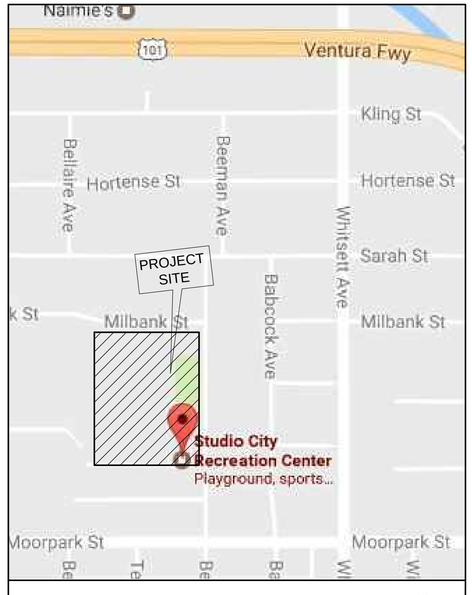

VICINITY MAP

NOT TO SCALE

BUREAU OF ENGINEERING
OFFICIAL RECORD

MC A ENGINEERS, INC.
3415 S. Sepulveda Blvd., Suite 330, Los Angeles, CA 90034
Tel: 310.733.0308 Fax: 310.733.0423

CITY OF LOS ANGELES
DEPARTMENT OF PUBLIC WORKS
BUREAU OF ENGINEERING

ENGINEERING
CITY OF LOS ANGELES

NO.	REVISION DESCRIPTION	DATE	BY

BUILDING NO. -

INDEX NO. RP-300106

PROFESSIONAL ENGINEER — CIVIL — No. C36079 — Exp. 6/30/20 — STATE OF CALIFORNIA

CITY ENGINEER: TED ALLEN, PE — DATE: 1-24-2019
ARCHITECTURAL DIVISION — LIC. NO.: C36079 — 1-24-2019
ENGINEER: VIRGILIO ADANAN — 1-24-2019
DESIGNED BY: VIRGILIO ADANAN — 1-24-2019
DRAWN BY: A.WAGGONER — 1-24-2019
CHECKED BY: VIRGILIO ADANAN — 1-24-2019
APPROVED BY: MAHMOOD KARIMZADEH, AIA, DEPUTY CITY ENGINEER — 1-24-2019

CLIENT: DEPARTMENT OF RECREATION AND PARKS
GENERAL MANAGER: MICHAEL A. SHULL

SHEET TITLE: GENERAL NOTES, LEGEND, AND ABBREVIATIONS

PROJECT: STUDIO CITY GYMNASIUM

ADDRESS: 12621 RYE STREET, STUDIO CITY, CA 91604

WORK ORDER E170267B

PLAN FILE 860

DRAWING C100

SHEET 28 OF SHEETS 211

PLOTTED: 7/1/2019 11:34:04 AM

TTLB TEMPLATE REVISION DATE: 09/25/17
SHEET ISSUE

FILE PATH: A:360://Studio City Recreation Center/SCRC-Project Model_Central_Final.rvt

THE CITY OF LOS ANGELES OR ITS OFFICERS OR AGENTS SHALL NOT BE RESPONSIBLE FOR THE ACCURACY OR COMPLETENESS OF ELECTRONIC COPIES OF THIS PLAN SHEET.

REVISION DATES (DESIGN STAGE ONLY)

LEGEND:

CONCRETE PAVEMENT PER DETAIL 1 ON SHEET C500.

ASPHALT PAVEMENT

TURF OR PLANTER AREA (SEE LANDSCAPING DRAWINGS)

WALL (SEE ARCHITECTURAL AND STRUCTURAL DRAWINGS)

PROPERTY LINE

CENTER LINE

FINISHED GRADE CONTOUR — 150.00

EXISTING GRADE CONTOUR — 150.00

EXISTING GRADE ELEVATION — (150.00)

FINISHED GRADE ELEVATION — 150.00

CHAIN LINK FENCE (CLF) — x x

FLOW LINE

RIDGE LINE — R

GRADE BREAK — GB

GAS LINE — G

ELECTRICAL CONDUIT — E

TRAFFIC SIGNAL LINE — TS

STORM DRAIN LINE — SD

FIRE WATER LINE — FW

FRENCH DRAIN LINE — FD

IRRIGATION LINE — IRR

SEWER LINE — SS

DOMESTIC WATER LINE — DW

CONTROL POINT

STORM DRAIN MANHOLE

SEWER MANHOLE

STREET LIGHT

GAS VALVE — GV

PULL BOX — PB

ELECTRICAL RISER

GUY WIRES

POWER POLE

WATER METER — WM

WATER VALVE — WV

FIRE HYDRANT

FIRE DEPARTMENT CONNECTION — FDC

POST INDICATOR VALVE — PIV

BACKFLOW PREVENTER

UTILITY NOTES:

WATER UTILITY NOTES:

1. ALL FITTINGS SUBJECT TO AN UNBALANCED HYDROSTATIC FORCE SHALL BE RESTRAINED WITH 2000 PSI CONCRETE THRUST BLOCKS BEARING AGAINST UNDISTURBED SOIL. IN ADDITION, ALL FLEXIBLE JOINTS SHALL BE RESTRAINED WITH ANCHOR BOXES.
2. THE CONTRACTOR SHALL FURNISH, INSTALL AND TEST ALL PIPING FOR WATER INSIDE THE DEVELOPMENT, INCLUDING FIRE SERVICE AND HYDRANTS, AND THE DOMESTIC WATER SYSTEM. THE CONTRACTOR SHALL ALSO BE RESPONSIBLE FOR ALL THE WATER APPURTENANCES, VALVES WATER METERS (SUB–METERS), FITTINGS, THRUST BLOCKS OR RESTRAINT SYSTEM, AND FINAL CHLORINATION/ DISINFECTION OF THE WHOLE WATER DISTRIBUTION SYSTEM OF THE PROJECT IN ACCORDANCE WITH THE WATER DISTRIBUTION SPEC 02510 REQUIREMENTS.
3. FIRE DEPARTMENT CONNECTION AT REDUCE PRESSURE PRINCIPLE BACKFLOW ASSEMBLY SHALL BE OF AN APPROVED TYPE, PROPERLY SUPPORTED, AND LOCATED WITHOUT INTERFERENCE FROM NEARBY OBSTRUCTIONS AND ON THE STREET SIDE OF THE BUILDING(S) WHERE APPROVED BY THE AUTHORITY HAVING JURISDICTION (AHJ).
4. FIRE DEPARTMENT CONNECTION(S) SHALL BE IDENTIFIED BY A SIGN HAVING RAISED LETTERS AT LEAST 1–INCH IN SIZE, CAST ON A PLATE OF FITTING ("AUTO SPKR", OR "OPEN SPKR", "STANDPIPE"), ETC.
5. PIPING SHALL BE "LISTED" FOR FIRE PROTECTION SERVICE AND COMPLY WITH AWWA STANDARDS, WHERE APPLICABLE. FITTINGS SHALL BE OF AN "APPROVED" TYPE.
6. ALL CONTROL VALVES SHALL BE "LISTED" INDICATING TYPE UNLESS A NON–INDICATING VALVE, SUCH AS AN UNDERGROUND GATE VALVE WITH APPROVED ROADWAY BOX COMPLETE WITH T–WRENCH, IS ACCEPTABLE TO THE AUTHORITY HAVING JURISDICTION (AHJ).
7. DOMESTIC WATER LINE PIPE SIZE 2–1/2" AND SMALLER USE COPPER TUBING, TYPE L HARD. PROVIDE PIPE CORROSION PROTECTION.
8. ALL TEES, PLUGS, CAPS, BENDS, AND HYDRANT BRANCHES ON PIPE INSTALLED UNDERGROUND SHALL BE RESTRAINED (PIPE CLAMPS AND TIE–RODS, THRUST BLOCKS, LOCKED MECHANICAL OR PUSH–ON JOINTS, MECHANICAL JOINTS UTILIZING SET SCREW RETAINER GLANDS, OR OTHER APPROVED METHODS) AGAINST MOVEMENT.
9. CONTRACTOR TO PROVIDE FIRE DEPARTMENT APPROVED SIGN TO INDICATE LOCATION OF FIRE DEPARTMENT CONNECTION TO READ AS:

   1.) "FDC" WHERE THE FIRE DEPARTMENT CONNECTION IS LOCATED.

STORM DRAINAGE UTILITY NOTES:

1. CONTRACTOR TO COORDINATE WITH CITY OF LOS ANGELES FOR CONNECTION TO STREET STORM DRAINAGE LINE.
2. CONTRACTOR TO FIELD VERIFY ACTUAL ELEVATION AND LOCATION OF EXISTING STORM DRAIN LINE AND STRUCTURE PRIOR TO INSTALLATION.
3. CONTRACTOR TO COORDINATE WITH THE OFF–SITE WORKS APPROVED BY THE CITY OF LOS ANGELES AND LOS ANGELES COUNTY FOR THE CONSTRUCTION OF STORM DRAIN LINE OUTLET CONNECTION.
4. ALL CATCH BASINS AND DRAINAGE INLETS SHALL BE STENCILED WITH "NO DUMPING, DRAINS TO OCEAN" LOGO.
5. CONTRACTOR SHALL VERIFY ALL CONDITIONS AND DIMENSIONS AND SHALL REPORT ANY DISCREPANCIES TO THE CITY ENGINEER PRIOR TO THE COMMENCEMENT OF ANY WORK.
6. TRENCH EXCAVATION AND BACKFILLING SHALL BE IN ACCORDANCE WITH APPLICABLE STANDARDS. THE CONTRACTORS SHALL COMPLY WITH ALL APPLICABLE DIVISION OF INDUSTRIAL REGULATIONS (CAL–OSHA) SAFETY STANDARDS.
7. COORDINATE WITH PLUMBING PLAN FOR EXACT LOCATION OF POINT OF CONNECTION BETWEEN PLUMBING AND CIVIL. ADJUST LINE AS REQUIRED.
8. MINIMUM STORM DRAIN LINE PIPE SLOPE AT 0.50%.
9. ALL CONNECTION TO CITY OF LOS ANGELES STORM DRAINAGE LINE TO BE SCHEDULE 80 PVC PIPE OR AS APPROVED BY CITY OF LOS ANGELES PER STORM DRAINAGE CONNECTION PERMIT.
10. DIRECT ROOF DOWNSPOUT TO PLANTER BOX OR CONNECT TO ONSITE STORM DRAINAGE LINE TOWARDS THE BIO–FILTRATION AS INDICATED ON AREA UTILITY PLAN AND DETAILS.

SEWER UTILITY NOTES:

1. CONTRACTOR TO COORDINATE WITH CITY OF LOS ANGELES FOR CONNECTION TO STREET HOUSE CONNECTION.
2. CONTRACTOR TO FIELD VERIFY ACTUAL ELEVATION AND LOCATION OF EXISTING SEWER LINE PRIOR INSTALLATION. CCTV THE LINE AND IF THE EXISTING LATERAL LINE IS BROKEN, CONTRACTOR TO REPLACE WITH NEW.
3. CONTRACTOR TO COORDINATE WITH THE OFF–SITE WORKS DURING INSTALLATION, ADJUST SEWER LINE CONNECTION AS REQUIRED.
4. CONTRACTOR TO VERIFY ALL CONDITIONS AND DIMENSIONS AND SHALL REPORT ANY DISCREPANCIES TO THE ENGINEER PRIOR TO THE COMMENCEMENT OF ANY WORK.
5. TRENCH EXCAVATION AND BACKFILLING SHALL BE IN ACCORDANCE WITH APPLICABLE STANDARD. THE CONTRACTORS SHALL COMPLY WITH ALL APPLICABLE DIVISION OF INDUSTRIAL REGULATIONS (CAL–OSHA) SAFETY STANDARDS.
6. COORDINATE WITH PLUMBING PLAN FOR EXACT LOCATION OF POINT OF CONNECTION BETWEEN PLUMBING AND CIVIL. ADJUST LINE AS REQUIRED.
7. FOR TOP OF RIM, CLEAN OUT COVER ELEVATION, AND MANHOLE COVER ELEVATION, COORDINATE UTILITY PLAN WITH GRADING PLANS; REPORT ANY DISCREPANCIES TO THE CITY ENGINEER PRIOR TO THE COMMENCEMENT OF ANY WORK.
8. TEST SHALL BE CONDUCTED IN ACCORDANCE WITH SECTION 306 – UNDERGROUND CONDUIT CONSTRUCTION OF THE STANDARD SPECIFICATIONS FOR PUBLIC WORKS CONSTRUCTION.
9. CONTRACTOR TO FIELD VERIFY EXISTING SEWER LINE/HOUSE CONNECTION, CONDUCT CCTV TO VERIFY PIPE SIZE, INVERT ELEVATION AND IDENTIFY IF THE EXISTING PIPE ARE DAMAGED OR NOT. DAMAGED EXISTING PIPE NEEDS TO BE REPLACED BASED ON THE FINDINGS.
10. CONTRACTOR TO COORDINATE POINT OF CONNECTION BETWEEN SEWER LATERAL (HOUSE CONNECTION) AND BUILDING PLUMBING SEWER LAY–OUT. CONTRACTOR MAY USE ONE HOUSE CONNECTION ONLY IF THE EXISTING PIPE SIZE IS 6"ø (OR 4"ø WITH GREATER THAN 2% SLOPE AND DEPENDING ON THE REQUIRED PLUMBING OUTLET PIPE SIZE).
11. CONTRACTOR TO INSTALL 6"ø SEWER LATERAL AT 1% MINIMUM SLOPE. FOR OTHER PIPE SIZE SEE PLUMBING.

ABBREVIATIONS:

AC	ASPHALT CONCRETE
AD	AREA DRAIN
APWA	AMERICAN PUBLIC WORKS ASSOCIATION
ARCH	ARCHITECTURAL
ASPH	ASPHALT
BC	BEGINNING OF CURVE
BLDG	BUILDING
BM	BENCHMARK
BW	BACK OF SIDEWALK
BX	BOTTOM OF RAMP
BS	BOTTOM OF STEP
CAB	CRUSHED AGGREGATE BASE
CB	CATCH BASIN
CCTV	CLOSED CIRCUIT TELEVISION
CEFB	CITY ENGINEER FIELD BOOK
CF	CURB FACE
℄	CENTERLINE
CI	CAST IRON
CLF	CHAIN LINK FENCE
CLR	CLEAR
CMB	CRUSHED MISCELLANEOUS BASE
CO	CLEANOUT
CONC	CONCRETE
CPM	CONSTRUCTION PROJECT MANAGER
DIA	DIAMETER
DIP	DUCTILE IRON PIPE
DDSG	DRIVE DOUBLE–LEAF SWING GATE
DMH	DRAIN MAINTENANCE HOLE
DS	DRAIN
DW	DOMESTIC WATER
DWG(S)	DRAWING(S)
DWP	DEPARTMENT OF WATER AND POWER
DWY	DRIVEWAY
E	EAST
EC	END OF CURVE
EDS	EDISON
EG	EDGE OF GUTTER/EXISTING GRADE
ELEC	ELECTRICAL
EL, ELEV	ELEVATION
EJ	EXPANSION JOINT
EP	EDGE OF PAVEMENT
EXIST, EX	EXISTING
EXP	EXPANSION
FB	FIELD BOOK
FD	FRENCH DRAIN
FDC	FIRE DEPARTMENT CONNECTION
FF	FINISH FLOOR ELEVATION
FG	FINISH GRADE
FH	FIRE HYDRANT
FL	FLOW LINE
FND	FOUNDATION
FS	FINISH SURFACE
FT	FEET
FW	FIRE WATER
G	GAS
GB	GRADE BREAK
GM	GAS METER
GVLT	GAS VAULT
GV	GAS VALVE
HP	HIGH POINT
IE	INVERT ELEVATION
IIE	INLET INVERT ELEVATION
INV	INVERT
IRR	IRRIGATION
ITEM NO.	ITEM SHOWN ON PTR
L	LENGTH
MAX	MAXIMUM
MEAS	MEASURED
MH	MAINTENANCE HOLE, MANHOLE
MIN	MINIMUM

ABBREVIATIONS:

N	NORTH
NPR	NEWSPAPER RACK
OC	ON CENTER
OIE	OUTLET INVERT ELEVATION
OAR	OWNERS AGENT REPRESENTITIVE
P	PROPORTIONED
PA	PLANTING AREA
PM	PUNCH MARK ON MANHOLE, PARKING METER
PCC	PORTLAND CONCRETE CEMENT
PIV	POST INDICATOR VALVE
PL	PROPERTY LINE
PP	POWER POLE
PTR	PRELIMINARY TITLE REPORT
PSG	PEDESTRIAN SWING GATE
PVC	POLYVINYL CHLORIDE PIPE
PVMT	PAVEMENT
R	RADIUS (GEOMETRY), RIDGE (GRADING), RECORD (SURVEY)
RCP	REINFORCED CONCRETE PIPE
REF	REFERENCE
RW	RIGHT OF WAY
S	SLOPE, SOUTH, SEWER
SD	STORM DRAIN
SDR	STANDARD PIPE DIMENSION RATIO
SSMH	SANITARY SEWER MANHOLE
SDMH	STORM DRAIN MANHOLE
SLPB	STREET LIGHT PULLBOX
SPK	SPIKE
SPKR	SPRINKLER
SS	SANITARY SEWER
STA	STATION, STD(S), STANDARD(S)
S&W	SPIKE & WASHER
SW	SIDEWALK
T	TANGENT
TA	TREE AREA
TAD	TOP OF AREA DRAIN
TC	TOP OF CONCRETE OR CURB
TCB	TOP OF CATCH BASIN
TCO	TOP OF CLEAN OUT
TE	TOP ELEVATION
TEL	TELEPHONE
TEL VLT	TELEPHONE VAULT
TG	TOP OF GRATE
TMH	TELEPHONE MANHOLE
TMS	TOP OF MOW STRIP
TOS	TOP OF SLOPE, TOP OF SLAB
TOE	TOP OF EMBANKMENT
TSPB	TRAFFIC SIGNAL PULLBOX
TS	TOP OF STEP
TW	TOP OF WALL
TX	TOP OF RAMP
TYP	TYPICAL
U/G	UNDERGROUND
VCP	VITRIFIED CLAY PIPE
VIF	VERIFY IN FIELD
V V	VAULT IN VENTS
W	DOMESTIC WATER, WEST
C	WATER METER
WV	WATER VALVE
WVLT	WATER VAULT
YB	YARD BOX
(W,S,G,E)	(WATER, SEWER, GAS, ELECTRICAL)

BUREAU OF ENGINEERING — OFFICIAL RECORD

DEPARTMENT OF PUBLIC WORKS — BUREAU OF ENGINEERING — CITY OF LOS ANGELES

ENGINEERING — CITY OF LOS ANGELES

NO.	REVISION DESCRIPTION	DATE	BY

BUILDING NO. -

INDEX NO. RP-300106

REGISTERED PROFESSIONAL ENGINEER — TED ALLEN — No. C36079 — Exp. 6/30/20 — CIVIL — STATE OF CALIFORNIA

CITY ENGINEER	
DATE:	1-24-2019
LIC. NO.: C36079	1-24-2019
ENGINEER: VIRGILIO AOANAN	1-24-2019
DESIGNED BY: VIRGILIO AOANAN	1-24-2019
DRAWN BY: A.WAGGONER	
CHECKED BY: VIRGILIO AOANAN	1-24-2019
APPROVED BY:MAHMOOD KARIMZADEH, AIA, DEPUTY CITY ENGINEER	1-24-2019

TED ALLEN, PE
ARCHITECTURAL DIVISION

CLIENT: DEPARTMENT OF RECREATION AND PARKS
GENERAL MANAGER: MICHAEL A. SHULL

SHEET TITLE: GENERAL NOTES, LEGEND, AND ABBREVIATIONS

PROJECT: STUDIO CITY GYMNASIUM

ADDRESS: 12621 RYE STREET, STUDIO CITY, CA 91604

CITY OF LOS ANGELES

MCA ENGINEERS, INC. — 3415 S. Sepulveda Blvd., Suite 250, Los Angeles, CA 90034 — Tel. 310.839.4200 Fax. 310.839.4242

WORK ORDER E170267B

PLAN FILE 860

DRAWING C101

SHEET 29 OF SHEETS 211

PLOTTED: 7/1/2019 11:34:04 AM

THE CITY OF LOS ANGELES OR ITS OFFICERS OR AGENTS SHALL NOT BE RESPONSIBLE FOR THE ACCURACY OR COMPLETENESS OF ELECTRONIC COPIES OF THIS PLAN SHEET.

FILE PATH: A360://Studio City Recreation Center/SCRC-Project Model_Central_Final.rvt

TTLB TEMPLATE REVISION DATE: 09/25/17
SHEET ISSUE

REVISION DATES (DESIGN STAGE ONLY)

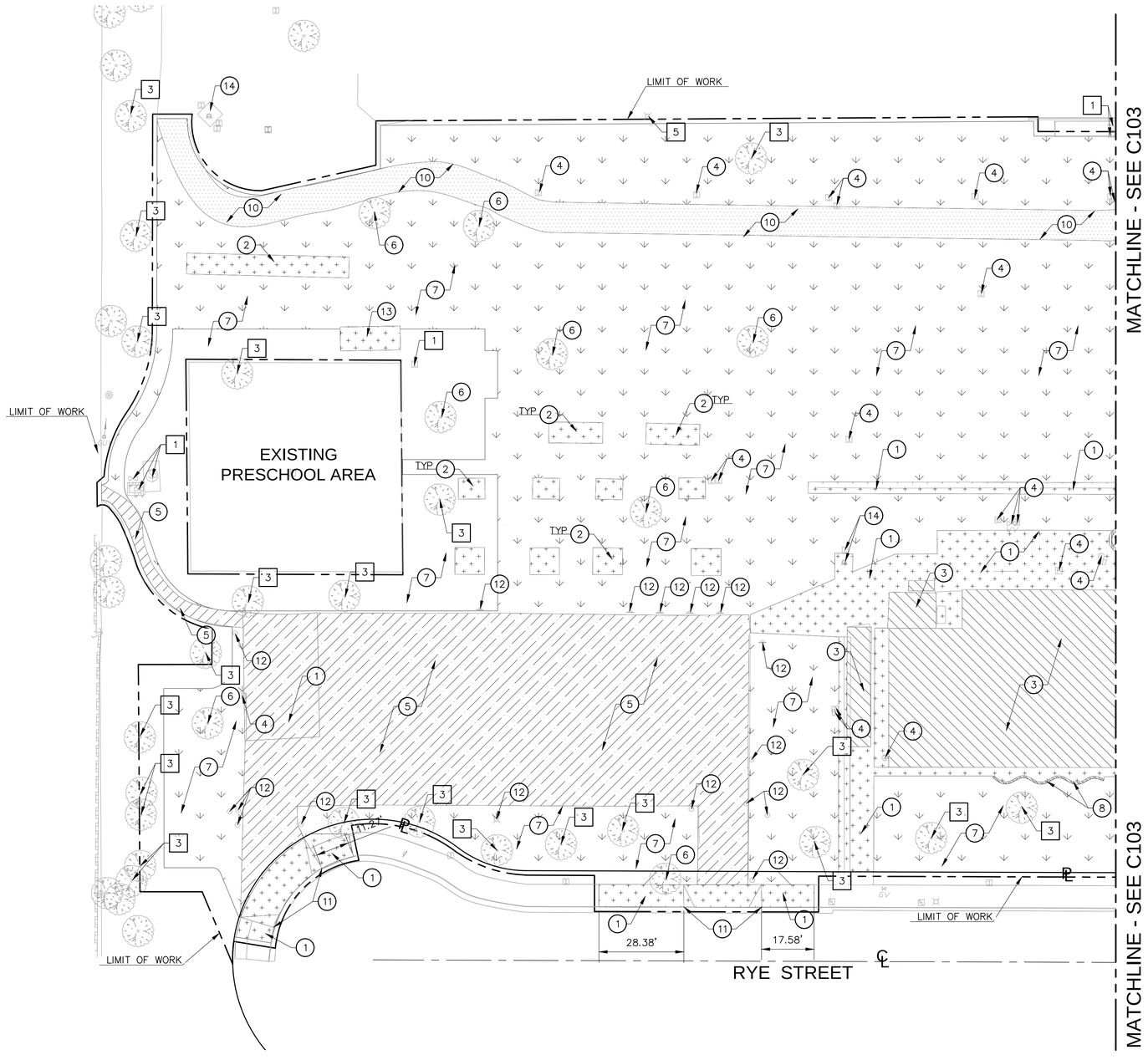

DEMOLITION NOTES:

1. REMOVE EXISTING CONCRETE PAVING AND BASE, FULL DEPTH.
2. REMOVE EXISTING PICNIC TABLES AND THE CONCRETE PAD IN ITS ENTIRETY. COORDINATE REMOVAL WITH RAP STAFF.
3. REMOVE EXISTING STRUCTURE INCLUDING FOOTINGS AND APPURTENANCES.
4. REMOVE AND RELOCATE EXISTING UTILITY/UTILITY BOX/UTILITY CABINET. REFER TO ELECTRICAL/LANDSCAPE PLANS.
5. REMOVE EXISTING AC PAVEMENT AND BASE, FULL DEPTH.
6. REMOVE EXISTING TREE AND ROOTS IN ITS ENTIRETY. REFER TO TREE PROTECTION PLAN, L101/L102.
7. CLEAR, GRUB, AND REMOVE EXISTING TURF/PLANTER/SHRUBS AND ROOTS IN THEIR ENTIRETY.
8. REMOVE EXISTING WALL IN ITS ENTIRETY INCLUDING FOUNDATION AND APPURTENANCES.
9. REMOVE EXISTING STEPS INCLUDING FOUNDATION AND APPURTENANCES.
10. REMOVE EXISTING DIRT/GRAVEL PATH INCLUDING MOWSTRIP, FULL DEPTH.
11. REMOVE EXISTING DRIVEWAY AND BASE, FULL DEPTH.
12. REMOVE EXITING POLE AND FOOTING IN ITS ENTIRETY.
13. RAP TO REMOVE EXISTING STORAGE CONTAINER PRIOR TO DEMOLITION. DEMO THE CONCRETE PAD IN ITS ENTIRETY.
14. REMOVE EXISTING DRINKING FOUNTAIN.

PROTECT-IN-PLACE NOTES:

1. PROTECT IN PLACE EXISTING UTILITY BOX/VALVE, ADJUST TO GRADE. COORDINATE WITH LANDSCAPE AND ELECTRICAL PLANS.
2. PROTECT IN PLACE EXISTING WALL.
3. PROTECT IN PLACE EXISTING TREE. REFER TO TREE PROTECTION PLAN L101/L102.
4. PROTECT IN PLACE EXISTING POWER POLE AND GUY WIRE.
5. PROTECT IN PLACE EXISTING LIGHT POLE.

SITE REMOVAL LEGEND

REMOVE EXISTING STRUCTURE AND ITS APPURTENANCES INCLUDING FOOTING AND FOUNDATION.

REMOVE EXISTING CONCRETE PAVEMENT AND BASE COURSE, FULL DEPTH.

REMOVE EXISTING ASPHALT PAVEMENT AND BASE/ EXPOSED SUBGRADE AREA IN ITS ENTIRETY.

REMOVE EXISTING DIRT/GRAVEL PATH.

CLEAR, GRUB, AND REMOVE EXISTING TURF/PLANTER/SHRUBS AND ROOTS IN THEIR ENTIRETY.

DEMOLITION NOTES:

1. ALL EXISTING STREET IMPROVEMENTS, UNLESS OTHERWISE INDICATED HEREIN TO BE REMOVED, SHALL BE PROTECTED IN PLACE. THESE ITEMS INCLUDE SIDEWALK, DRIVEWAYS, CURB AND GUTTER, LIGHT POLES, POWER POLES, SIGNAL POLES AND APPURTENANCES.
2. CONTRACTOR SHALL NOTIFY ALL UTILITY OWNERS BOTH IN PRIVATE PROPERTY AND IN PUBLIC RIGHT OF WAY FOR EXISTING LATERALS TO BE REMOVED OR CAPPED.
3. VERIFY IN FIELD AND POTHOLE TO REMOVE ALL EXISTING ON-SITE SEWER LINES, CLEANOUTS, MANHOLES, UNLESS OTHERWISE INDICATED. CUT PIPE AND CAP PIPE ENDS AT LIMIT OF WORK LINE.
4. VERIFY IN FIELD AND POTHOLE TO REMOVE EXISTING ON-SITE ABANDONED WATER LINES, UNLESS OTHERWISE INDICATED. TURN OFF WATER AT SOURCE, CUT AND CAP PIPE AT LIMIT OF WORK LINE.
5. VERIFY IN FIELD AND POTHOLE TO REMOVE EXISTING ON-SITE STORM DRAIN LINES, CLEANOUTS, MANHOLES, UNLESS OTHERWISE INDICATED. CUT PIPE AND CAP PIPE ENDS AT LIMIT OF WORK.
6. FOR REMOVAL OF EXISTING ON-SITE IRRIGATION LINES AND SPRINKLERS COORDINATE WITH LANDSCAPE DRAWINGS.
7. FOR REMOVAL OF EXISTING ELECTRICAL, POWER, TELEPHONE, AND COMMUNICATIONS SYSTEMS ON SITE, COORDINATE WITH ELECTRICAL DRAWINGS.
8. FOR REMOVAL OF EXISTING GAS SYSTEM COORDINATE WITH MEP DRAWINGS.
9. REMOVE EXISTING ONSITE TREES WITHIN LIMIT OF WORK AS INDICATED. COORDINATE WITH LANDSCAPING. IN CASE OF CONFLICT, LANDSCAPE WILL GOVERN.
10. CONTRACTOR SHOULD VISUALLY VERIFY IN FIELD ALL EXISTING FEATURE TO BE REMOVED WITHIN LIMIT OF WORK BEFORE BIDDING. ALL SURFACE AND UNDERGROUND FEATURES WITH LIMIT OF WORK ARE A PART OF DEMOLITION PLAN UNLESS OTHERWISE INDICATED TO PROTECT.
11. CONTRACTOR TO REMOVE AND REPLACE EXISTING SIDEWALK/CURB/GUTTER IF DAMAGED OR DETERMINED AS NOT IN GOOD ORDER BY THE CITY ENGINEER

DEMOLITION PLAN

20 10 0 20 40

SCALE: 1" = 20'

KEY MAP

SCALE: 1" = 400'

BUREAU OF ENGINEERING
OFFICIAL RECORD

MCA ENGINEERS INC
3211 Nebraska Ave. Ste. 210, Alhambra, CA 91803
Tel: 323.728.5848 Fax: 323.728.5842

THE CITY OF LOS ANGELES OR ITS OFFICERS OR AGENTS SHALL NOT BE RESPONSIBLE FOR THE ACCURACY OR COMPLETENESS OF ELECTRONIC COPIES OF THIS PLAN SHEET.

FILE PATH: A360://Studio City Recreation Center/SCRC-Project Model_Central_Final.rvt

TTLB TEMPLATE REVISION DATE: 09/25/17
SHEET ISSUE

REVISION DATES: (DESIGN STAGE ONLY)

BUREAU OF ENGINEERING
ENGINEERING
CITY OF LOS ANGELES

NO.	REVISION DESCRIPTION	DATE	BY

BUILDING NO. -

INDEX NO. RP-300106

DEPARTMENT OF PUBLIC WORKS
CITY OF LOS ANGELES

CITY ENGINEER	TED ALLEN, PE	DATE: 1-24-2019
ARCHITECTURAL DIVISION	LIC. NO.: C36079	
ENGINEER: VIRGILIO AOANAN		1-24-2019
DESIGNED BY: VIRGILIO AOANAN		1-24-2019
DRAWN BY: A.WAGGONER		1-24-2019
CHECKED BY: VIRGILIO AOANAN		1-24-2019
APPROVED BY:MAHMOOD KARIMZADEH, AIA, DEPUTY CITY ENGINEER		1-24-2019

CLIENT: DEPARTMENT OF RECREATION AND PARKS
GENERAL MANAGER: MICHAEL A. SHULL

SHEET TITLE: DEMOLITION PLAN

PROJECT: STUDIO CITY GYMNASIUM

ADDRESS: 12621 RYE STREET. STUDIO CITY, CA 91604

WORK ORDER E170267B

PLAN FILE 860

DRAWING C102

SHEET 30 OF SHEETS 211

PLOTTED: 7/1/2019 11:34:04 AM

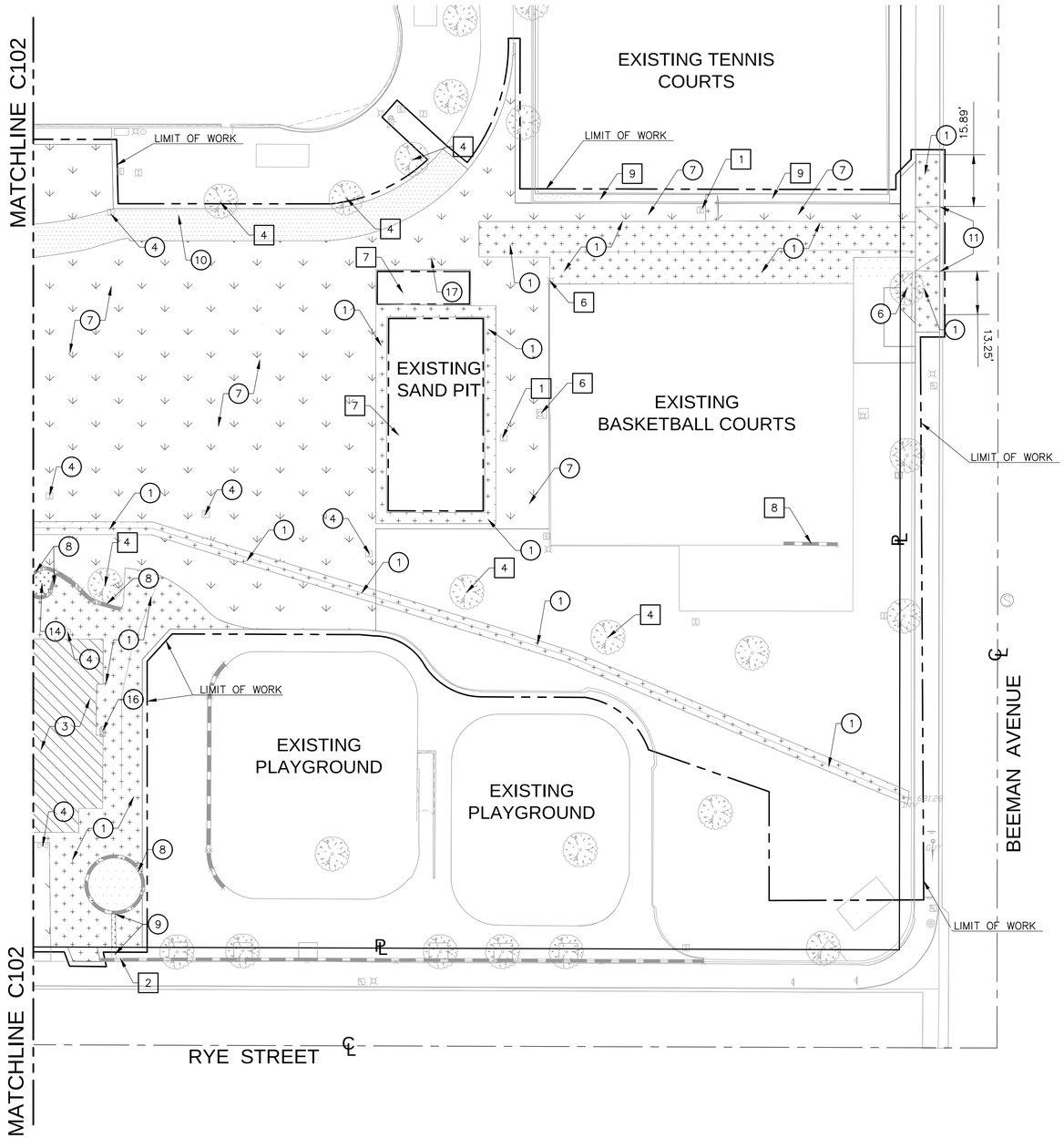

DEMOLITION NOTES:

1. REMOVE EXISTING CONCRETE PAVING AND BASE, FULL DEPTH.
2. REMOVE EXISTING PICNIC TABLES. COORDINATE WITH ARCHITECTURAL DEMOLITION PLAN.
3. REMOVE EXISTING STRUCTURE INCLUDING FOOTINGS AND APPURTENANCES. COORDINATE WITH ARCHITECTURAL DEMOLITION PLAN.
4. REMOVE AND RELOCATE EXISTING UTILITY/UTILITY BOX/UTILITY CABINET. REFER TO ELECTRICAL/LANDSCAPE PLANS.
5. REMOVE EXISTING AC PAVEMENT AND BASE, FULL DEPTH.
6. REMOVE EXISTING TREE AND ROOTS IN ITS ENTIRETY, COORDINATE WITH ARCHITECTURAL DEMOLITION PLAN.
7. CLEAR, GRUB, AND REMOVE EXISTING TURF/PLANTER/SHRUBS AND ROOTS IN THEIR ENTIRETY.
8. REMOVE EXISTING WALL IN ITS ENTIRETY INCLUDING FOUNDATION AND APPURTENANCES.
9. REMOVE EXISTING STEPS INCLUDING FOUNDATION AND APPURTENANCES.
10. REMOVE EXISTING DIRT/GRAVEL PATH INCLUDING MOWSTRIP, FULL DEPTH.
11. REMOVE EXISTING DRIVEWAY AND BASE, FULL DEPTH.
12. REMOVE EXITING POLE AND FOOTING IN ITS ENTIRETY, COORDINATE WITH ARCHITECTURAL DEMOLITION PLAN.
13. REMOVE EXITING LIGHT POST AND FOOTING IN ITS ENTIRETY, COORDINATE WITH ARCHITECTURAL DEMOLITION PLAN.
14. REMOVE EXISTING SUMP PUMP.
15. REMOVE EXISTING BASKETBALL HOOPS. COMPLETE AND DISPOSE PER RAP DIRECTION.
16. REMOVE EXISTING MAILBOX.
17. REMOVE EXITING AND RELOCATE EXISTING SIGN PER LANDSCAPE PLANS.

PROTECT-IN-PLACE NOTES:

1. PROTECT IN PLACE EXISTING UTILITY BOX/VALVE, ADJUST TO GRADE COORDINATE WITH LANDSCAPE AND ELECTRICAL PLANS.
2. PROTECT IN PLACE EXISTING WALL.
3. PROTECT IN PLACE EXISTING STRUCTURE.
4. PROTECT IN PLACE EXISTING TREE.
5. PROTECT IN PLACE EXISTING POWER POLE AND GUY WIRE.
6. PROTECT IN PLACE EXISTING LIGHT POLE.
7. PROTECT IN PLACE EXISTING CURB/FENCE/EQUIPMENT/SANDPIT.
8. PROTECT IN PLACE EXISTING CONCRETE HEADER/FENCE.
9. PROTECT IN PLACE EXISTING LANDSCAPE.

SITE REMOVAL LEGEND

REMOVE EXISTING STRUCTURE AND ITS APPURTENANCES INCLUDING FOOTING AND FOUNDATION.

REMOVE EXISTING PAVEMENT AND BASE COURSE, FULL DEPTH.

REMOVE EXISTING ASPHALT PAVEMENT AND BASE/ EXPOSED SUBGRADE AREA IN ITS ENTIRETY.

REMOVE EXISTING DIRT/GRAVEL PATH.

REMOVE EXISTING TURF/PLANTER AREA.

DEMOLITION NOTES:

1. ALL EXISTING STREET IMPROVEMENTS, UNLESS OTHERWISE INDICATED HEREIN TO BE REMOVED, SHALL BE PROTECTED IN PLACE. THESE ITEMS INCLUDE SIDEWALK, DRIVEWAYS, CURB AND GUTTER, LIGHT POLES, POWER POLES, SIGNAL POLES AND APPURTENANCES.
2. CONTRACTOR SHALL NOTIFY ALL UTILITY OWNERS BOTH IN PRIVATE PROPERTY AND IN PUBLIC RIGHT OF WAY FOR EXISTING LATERALS TO BE REMOVED OR CAPPED.
3. VERIFY IN FIELD AND POTHOLE TO REMOVE ALL EXISTING ON-SITE SEWER LINES, CLEANOUTS, MANHOLES, UNLESS OTHERWISE INDICATED. CUT PIPE AND CAP PIPE ENDS AT LIMIT OF WORK LINE.
4. VERIFY IN FIELD AND POTHOLE TO REMOVE EXISTING ON-SITE ABANDONED WATER LINES, UNLESS OTHERWISE INDICATED. TURN OFF WATER AT SOURCE, CUT AND CAP PIPE AT LIMIT OF WORK LINE.
5. VERIFY IN FIELD AND POTHOLE TO REMOVE EXISTING ON-SITE STORM DRAIN LINES, CLEANOUTS, MANHOLES, UNLESS OTHERWISE INDICATED. CUT PIPE AND CAP PIPE ENDS AT LIMIT OF WORK.
6. FOR REMOVAL OF EXISTING ON-SITE IRRIGATION LINES AND SPRINKLERS COORDINATE WITH LANDSCAPE DRAWINGS.
7. FOR REMOVAL OF EXISTING ELECTRICAL, POWER, TELEPHONE, AND COMMUNICATIONS SYSTEMS ON SITE, COORDINATE WITH ELECTRICAL DRAWINGS.
8. FOR REMOVAL OF EXISTING GAS SYSTEM COORDINATE WITH MEP DRAWINGS.
9. REMOVE EXISTING ONSITE TREES WITHIN LIMIT OF WORK AS INDICATED. COORDINATE WITH LANDSCAPING. IN CASE OF CONFLICT, LANDSCAPE WILL GOVERN.
10. CONTRACTOR SHOULD VISUALLY VERIFY IN FIELD ALL EXISTING FEATURE TO BE REMOVED WITHIN LIMIT OF WORK BEFORE BIDDING. ALL SURFACE AND UNDERGROUND FEATURES WITH LIMIT OF WORK ARE A PART OF DEMOLITION PLAN UNLESS OTHERWISE INDICATED TO PROTECT.
11. CONTRACTOR TO REMOVE AND REPLACE EXISTING SIDEWALK/CURB/GUTTER IF DAMAGED OR DETERMINED AS NOT IN GOOD ORDER BY THE CITY ENGINEER

DEMOLITION PLAN

20 10 0 20 40

SCALE: 1" = 20'

KEY MAP

SCALE: 1" = 400'

MCA ENGINEERS INC. 1901 S. Bascom Avenue, Suite 220, Campbell, CA 95008 Tel: 323.728.8300 Fax: 323.728.8422

BUREAU OF ENGINEERING

ENGINEERING

CITY OF LOS ANGELES

BUREAU OF ENGINEERING

DEPARTMENT OF PUBLIC WORKS

CITY OF LOS ANGELES

NO.	REVISION DESCRIPTION	DATE	BY

BUILDING NO. -

INDEX NO. RP-300106

BUREAU OF ENGINEERING OFFICIAL RECORD

PROFESSIONAL ENGINEER TED C. ALLEN No. C36079 Exp. 6/30/20 CIVIL STATE OF CALIFORNIA

CITY ENGINEER	DATE:	
ARCHITECTURAL DIVISION		
ENGINEER: VIRGILIO AOANAN	LIC. NO.: C36079	1-24-2019
DESIGNED BY: VIRGILIO AOANAN		1-24-2019
DRAWN BY: A.WAGGONER		1-24-2019
CHECKED BY: VIRGILIO AOANAN		1-24-2019
APPROVED BY:MAHMOOD KARIMZADEH, AIA, DEPUTY CITY ENGINEER		1-24-2019

TED ALLEN, PE

CLIENT: DEPARTMENT OF RECREATION AND PARKS

GENERAL MANAGER: MICHAEL A. SHULL

SHEET TITLE: DEMOLITION PLAN

PROJECT: STUDIO CITY GYMNASIUM

ADDRESS: 12621 RYE STREET, STUDIO CITY, CA 91604

WORK ORDER E170267B

PLAN FILE 860

DRAWING C103

SHEET 31 OF SHEETS 211

PLOTTED: 7/1/2019 11:34:04 AM

THE CITY OF LOS ANGELES OR ITS OFFICERS OR AGENTS SHALL NOT BE RESPONSIBLE FOR THE ACCURACY OR COMPLETENESS OF ELECTRONIC COPIES OF THIS PLAN SHEET.

FILE PATH: A360://Studio City Recreation Center/ISCRC-Project Model_Central_Final.rvt

TTLB TEMPLATE REVISION DATE: 09/25/17

SHEET ISSUE

REVISION DATES (DESIGN STAGE ONLY)

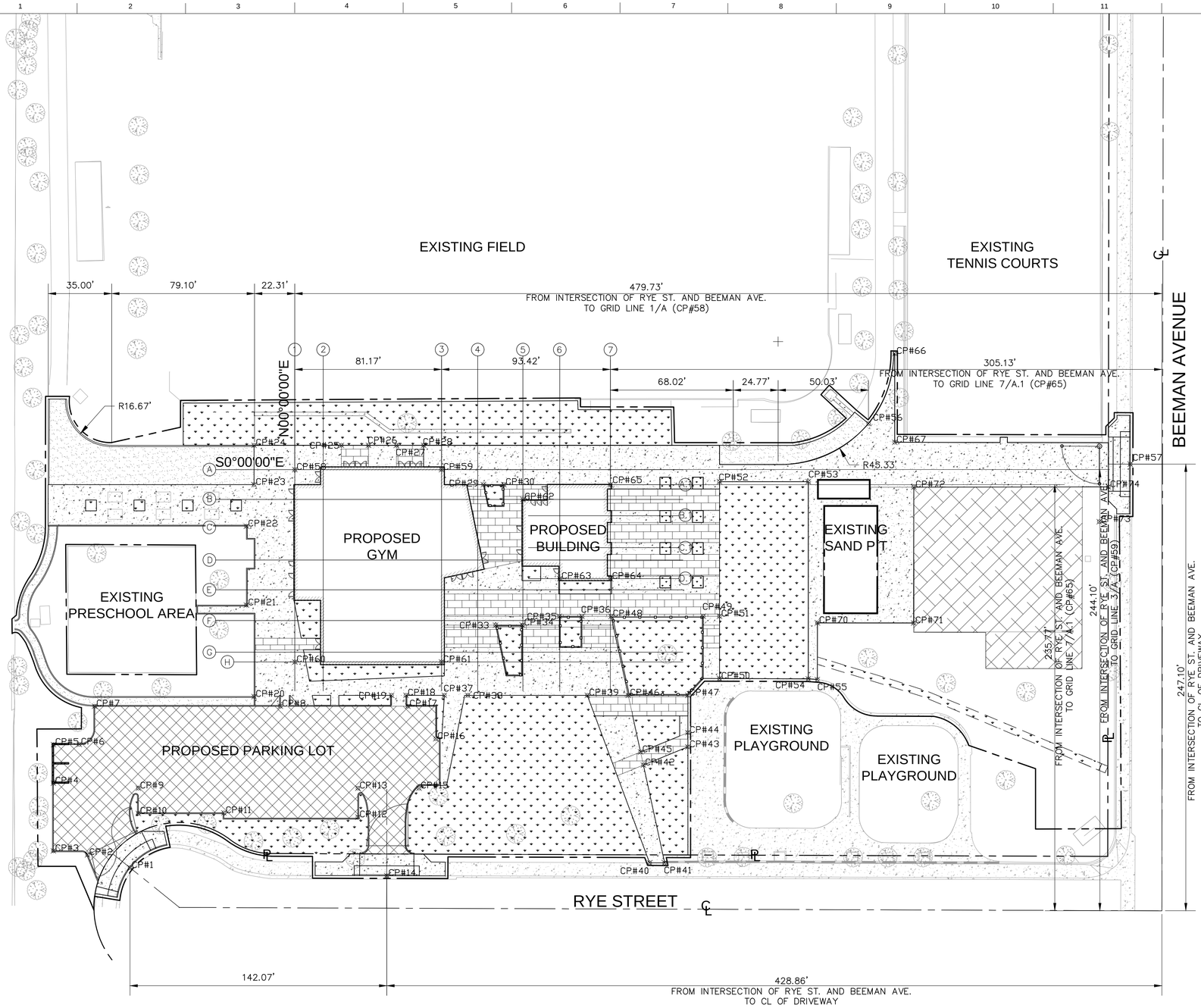

COORDINATE DATA			
LAYOUT CONTROL POINTS	N	E	REMARKS
CP# 1	156477.6717	536488.6102	CL OF DRIVEWAY ON RYE ST
CP# 2	156478.4561	536486.8996	EDGE OF ASPHALT AT PARKING
CP# 3	156478.4561	536485.0688	EDGE OF ASPHALT AT PARKING
CP# 4	156481.5670	536485.0685	EDGE OF RETAINING WALL AT PARKING
CP# 5	156483.3453	536485.0829	EDGE OF RETAINING WALL AT PARKING
CP# 6	156483.5640	536486.7710	EDGE OF ASPHALT AT PARKING
CP# 7	156485.1174	536486.9785	EDGE OF ASPHALT AT PARKING
CP# 8	156485.1174	536495.0201	EDGE OF ASPHALT AT PARKING
CP# 9	156481.3385	536488.9926	EDGE OF ASPHALT AT PARKING
CP# 10	156480.1732	536488.9926	EDGE OF ASPHALT AT PARKING
CP# 11	156480.1732	536494.9510	EDGE OF ASPHALT AT PARKING
CP# 12	156480.0066	536499.1168	EDGE OF ASPHALT AT PARKING
CP# 13	156481.3385	536499.1168	EDGE OF ASPHALT AT PARKING
CP# 14	156477.3025	536500.4492	CL OF DRIVEWAY ON RYE ST
CP# 15	156481.3382	536501.9360	EDGE OF ASPHALT AT PARKING
CP# 16	156483.6174	536501.9360	EDGE OF ASPHALT AT PARKING
CP# 17	156485.1176	536501.6796	EDGE OF ASPHALT AT PARKING
CP# 18	156485.6191	536500.9360	EDGE OF PLANTER
CP# 19	156485.6191	536500.2693	EDGE OF CURB RAMP
CP# 20	156487.6599	536494.3993	AT CONCRETE AND PAVING STONE
CP# 21	156489.7392	536494.0363	AT CONCRETE
CP# 22	156493.4509	536494.3993	AT CONCRETE
CP# 23	156495.3336	536494.3504	EDGE OF CONCRETE AND DECOMPOSED GRANITE
CP# 24	156497.1468	536494.3504	EDGE OF DECOMPOSED GRANITE AND PLANTER
CP# 25	156497.1466	536498.3567	AT CONCRETE AND PAVING STONE
CP# 26	156497.1466	536499.6068	AT CONCRETE AND PAVING STONE
CP# 27	156497.1466	536500.8985	AT CONCRETE AND PAVING STONE
CP# 28	156497.1466	536502.1485	EDGE OF PLANTER
CP# 29	156495.3329	536504.9030	EDGE OF PLANTER
CP# 30	156495.3329	536505.8488	EDGE OF PLANTER
CP# 31			
CP# 32			
CP# 33	156488.8554	536505.4676	EDGE OF PLANTER
CP# 34	156488.8554	536506.7035	EDGE OF PLANTER
CP# 35	156489.2645	536508.4051	EDGE OF PLANTER
CP# 36	156489.2645	536509.4468	EDGE OF PLANTER
CP# 37	156485.6191	536503.1043	EDGE OF PLANTER
CP# 38	156485.6191	536504.1876	EDGE OF PLANTER
CP# 39	156485.6191	536509.6968	EDGE OF PLANTER
CP# 40	156477.8978	536512.5650	EDGE OF CONCRETE @ WORK LIMIT
CP# 41	156477.8944	536513.2570	EDGE OF CONCRETE @ WORK LIMIT
CP# 42	156482.4042	536512.2823	EDGE OF PLANTER
CP# 43	156483.2412	536514.3296	EDGE OF CONCRETE @ WORK LIMIT
CP# 44	156483.9010	536514.3296	EDGE OF CONCRETE @ WORK LIMIT
CP# 45	156483.0102	536512.1507	EDGE OF PLANTER
CP# 46	156485.6192	536511.5844	EDGE OF PLANTER
CP# 47	156485.6192	536514.3296	EDGE OF CONCRETE @ WORK LIMIT
CP# 48	156489.2645	536510.7931	EDGE OF PAVING STONE AND CONCRETE
CP# 49	156489.2645	536515.0389	EDGE OF PAVING STONE AND CONCRETE
CP# 50	156486.3942	536515.7889	EDGE OF CONCRETE @ WORK LIMIT
CP# 51	156489.2645	536515.7889	EDGE OF PAVING STONE AND CONCRETE
CP# 52	156495.4725	536515.7889	EDGE OF PLANTER
CP# 53	156495.4725	536519.8819	EDGE OF PLANTER
CP# 54	156486.3797	536519.8839	EDGE OF CONCRETE @ WORK LIMIT
CP# 55	156486.3449	536520.3006	EDGE OF CONCRETE @ WORK LIMIT
CP# 56	156498.1501	536522.6607	EDGE OF CONCRETE AND DECOMPOSED GRANITE
CP# 57	156496.2774	536534.7296	CL OF DRIVEWAY ON BEEMAN AVE
CP# 58	156496.0274	536496.2101	AT ARCHITECTURAL GRIDLINE A/1
CP# 59	156496.0274	536502.9746	AT ARCHITECTURAL GRIDLINE A/3
CP# 60	156487.1578	536496.2101	AT ARCHITECTURAL GRIDLINE 1/1
CP# 61	156487.1592	536502.9746	AT ARCHITECTURAL GRIDLINE 1/3
CP# 62	156494.6526	536506.7246	AT ARCHITECTURAL GRIDLINE B/5
CP# 63	156490.9993	536508.4263	AT ARCHITECTURAL GRIDLINE D.1/6
CP# 64	156490.9993	536510.7596	AT ARCHITECTURAL GRIDLINE D.1/7
CP# 65	156495.3334	536510.7596	AT ARCHITECTURAL GRIDLINE A.1/7
CP# 66	156501.3735	536523.8708	EDGE OF CONCRETE
CP# 67	156497.2870	536523.8712	EDGE OF CONCRETE
CP# 68			
CP# 69			
CP# 70	156488.9604	536520.3055	EDGE OF CONCRETE
CP# 71	156488.9556	536524.7413	EDGE OF CONCRETE @ BASKETBALL
CP# 72	156495.2186	536524.7491	EDGE OF CONCRETE @ BASKETBALL
CP# 73	156493.2071	536533.3124	EDGE OF CONCRETE @ WORK LIMIT
CP# 74	156495.2298	536533.7239	CORNER OF CONCRETE

SHEET NOTES:

1. FOR GENERAL NOTES, LEGEND AND ABBREVIATIONS, SEE SHEETS C100 AND C101.
2. SEE ARCHITECTURAL AND LANDSCAPE DRAWINGS FOR OTHER SITE RELATED DIMENSIONS NOT SHOWN ON THIS DRAWING.
3. FOR PAVEMENT MARKINGS AND STRIPING, RAMP WITH HANDRAILS, PLANTER AREA, TRASH ENCLOSURE AND TRANSFORMER ENCLOSURE, SEE ARCHITECTURAL DRAWINGS. FOR LANDSCAPING AND IRRIGATION FEATURES, CONCRETE PAVEMENT PATTERN, TEXTURE AND COLOR INTEGRATION, SEE LANDSCAPE DRAWINGS. FOR GAS, SEWER, ROOF DRAINS, FIRE & DOMESTIC WATER LINES POINTS OF CONNECTION AT BUILDING, SEE MECHANICAL AND PLUMBING DRAWINGS OF THE BUILDING. FOR TRANSFORMER ENCLOSURE AND CONCRETE PAD, SEE ELECTRICAL DRAWINGS.
4. PROVIDE EXPANSION JOINTS WHERE NEW CONCRETE WALK/PAVEMENT ABUTS ANOTHER RIGID STRUCTURE. FOR TYPICAL CONTROL AND EXPANSION JOINTS DETAIL, SEE SHEET C501.
5. GRAY LINES, SYMBOLS, FEATURES INDICATED ON PLAN ARE TO REMAIN OR PROTECT IN PLACE. SEE OFFSITE IMPROVEMENT DRAWINGS FOR OTHER REFERENCES AND INFORMATION.
6. ALL WORK IS NEW UNLESS OTHERWISE NOTED.

BUREAU OF ENGINEERING
OFFICIAL RECORD

COMPOSITE SITE CONTROL PLAN

30 15 0 30 60

SCALE: 1" = 30'

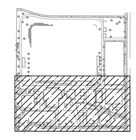

KEY MAP

SCALE: 1" = 400'

MCA ENGINEERS, INC.
CIVIL & STRUCTURAL
2401 E. Katella Avenue, Suite 220, Anaheim, CA 92806
Tel: 323.728.8080 Fax: 323.728.8082

BUREAU OF ENGINEERING
CITY OF LOS ANGELES
DEPARTMENT OF PUBLIC WORKS

ENGINEERING
CITY OF LOS ANGELES

NO.	REVISION DESCRIPTION	DATE	BY

BUILDING NO. -

INDEX NO. RP-300106

PROFESSIONAL ENGINEER — TED ALLEN — No. C36079 — Exp. 6/30/20 — CIVIL — STATE OF CALIFORNIA

CITY ENGINEER — DATE: 1-24-2019
LIC. NO.: C36079

TED ALLEN, PE
ARCHITECTURAL DIVISION

ENGINEER: VIRGILIO AOANAN — 1-24-2019
DESIGNED BY: VIRGILIO AOANAN — 1-24-2019
DRAWN BY: A.WAGGONER — 1-24-2019
CHECKED BY: VIRGILIO AOANAN — 1-24-2019
APPROVED BY: MAHMOOD KARIMZADEH, AIA, DEPUTY CITY ENGINEER — 1-24-2019

CITY OF LOS ANGELES

CLIENT: DEPARTMENT OF RECREATION AND PARKS
GENERAL MANAGER: MICHAEL A. SHULL

SHEET TITLE: COMPOSITE SITE CONTROL PLAN

PROJECT: STUDIO CITY GYMNASIUM

ADDRESS: 12621 RYE STREET, STUDIO CITY, CA 91604

WORK ORDER
E170267B

PLAN FILE
860

DRAWING
C200

SHEET 32 OF SHEETS 211

PLOTTED: 7/1/2019 11:34:04 AM

THE CITY OF LOS ANGELES OR ITS OFFICERS OR AGENTS SHALL NOT BE RESPONSIBLE FOR THE ACCURACY OR COMPLETENESS OF ELECTRONIC COPIES OF THIS PLAN SHEET.

FILE PATH: A360://Studio City Recreation Center/SCRC-Project Model_Central_Final.rvt

TTLB TEMPLATE REVISION DATE: 09/25/17
SHEET ISSUE

REVISION DATES (DESIGN STAGE ONLY)

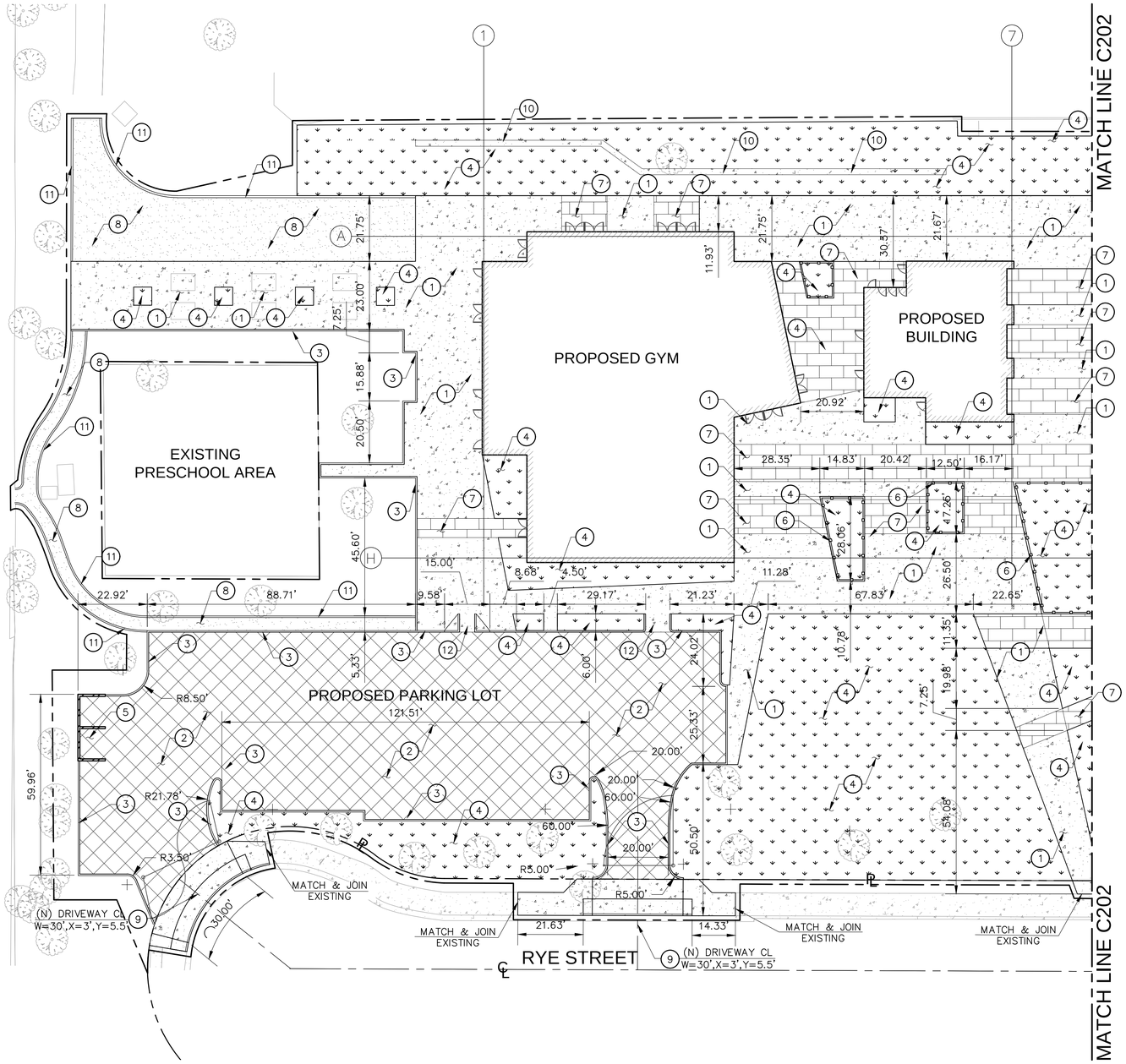

CONSTRUCTION NOTES:

1. CONSTRUCT CONCRETE PAVEMENT PER DETAIL 1 ON SHEET C500.
2. CONSTRUCT 3.5" THICK AC SURFACING OVER 6" THICK CRUSHED AGGREGATE BASE (CAB) PER DETAIL 2 ON SHEET C500.
3. CONSTRUCT CONCRETE CURB PER DETAIL 3 ON SHEET C500.
4. NEW LANDSCAPE AREA PER LANDSCAPE DRAWINGS.
5. CONSTRUCT TRASH ENCLOSURE PER ARCHITECTURAL AND STRUCTURAL DRAWINGS.
6. FENCE PER LANDSCAPE DRAWINGS.
7. INSTALL COLORED/SCORED CONCRETE PER LANDSCAPE DRAWINGS.
8. INSTALL DECOMPOSED GRANITE PER LANDSCAPE DRAWINGS.
9. CONSTRUCT DRIVEWAY TYPE 2 PER CITY OF LOS ANGELES S-440-3 W,Y,X PER PLAN.
10. CONSTRUCT CONCRETE V-GUTTER PER DETAIL 1 ON SHEET C503.
11. INSTALL MOWSTRIP PER DETAIL 2 ON SHEET C503.
12. ADA RAMP PER ARCHITECTURAL DRAWINGS.

LEGEND:

- CONCRETE PAVEMENT
- ASPHALT CONCRETE
- LANDSCAPE AREA
- WALL
- DECOMPOSED GRANITE

SHEET NOTES:

1. FOR GENERAL NOTES, LEGEND AND ABBREVIATIONS, SEE SHEETS C100 AND C101.
2. SEE ARCHITECTURAL AND LANDSCAPE DRAWINGS FOR OTHER SITE RELATED DIMENSIONS NOT SHOWN ON THIS DRAWING.
3. FOR PAVEMENT MARKINGS AND STRIPING, RAMP WITH HANDRAILS, PLANTER AREA, TRASH ENCLOSURE AND TRANSFORMER ENCLOSURE, SEE ARCHITECTURAL DRAWINGS. FOR LANDSCAPING AND IRRIGATION FEATURES, CONCRETE PAVEMENT PATTERN, TEXTURE AND COLOR INTEGRATION, SEE LANDSCAPE DRAWINGS. FOR GAS, SEWER, ROOF DRAINS, FIRE & DOMESTIC WATER LINES POINTS OF CONNECTION AT BUILDING, SEE MECHANICAL AND PLUMBING DRAWINGS OF THE BUILDING. FOR TRANSFORMER ENCLOSURE AND CONCRETE PAD, SEE ELECTRICAL DRAWINGS.
4. PROVIDE EXPANSION JOINTS WHERE NEW CONCRETE WALK/PAVEMENT ABUTS ANOTHER RIGID STRUCTURE. FOR TYPICAL CONTROL AND EXPANSION JOINTS DETAIL, SEE SHEET C502.
5. GRAY LINES, SYMBOLS, FEATURES INDICATED ON PLAN ARE TO REMAIN OR PROTECT IN PLACE. SEE OFFSITE IMPROVEMENT DRAWINGS FOR OTHER REFERENCES AND INFORMATION.
6. ALL WORK IS NEW UNLESS OTHERWISE NOTED.

SITE PLAN

20 10 0 20 40

SCALE: 1" = 20'

KEY MAP

SCALE: 1" = 400'

BUREAU OF ENGINEERING
OFFICIAL RECORD

BUREAU OF ENGINEERING
DEPARTMENT OF PUBLIC WORKS
CITY OF LOS ANGELES

ENGINEERING
CITY OF LOS ANGELES

NO.	REVISION DESCRIPTION	DATE	BY

BUILDING NO. -

INDEX NO. RP-300106

PROFESSIONAL ENGINEER — CIVIL — No. C36079 Exp. 6/30/20 — STATE OF CALIFORNIA

CITY ENGINEER	DATE:
TED ALLEN, PE	
ARCHITECTURAL DIVISION	
ENGINEER: VIRGILIO AOANAN — LIC. NO.: C36079	1-24-2019
DESIGNED BY: VIRGILIO AOANAN	1-24-2019
DRAWN BY: A.WAGGONER	1-24-2019
CHECKED BY: VIRGILIO AOANAN	1-24-2019
APPROVED BY:MAHMOOD KARIMZADEH, AIA, DEPUTY CITY ENGINEER	1-24-2019

CLIENT: DEPARTMENT OF RECREATION AND PARKS
GENERAL MANAGER: MICHAEL A. SHULL

SHEET TITLE: SITE CONTROL PLAN

PROJECT: STUDIO CITY GYMNASIUM

ADDRESS: 12621 RYE STREET, STUDIO CITY, CA 91604

MC A ENGINEERS, INC.
3111 S. Alameda Avenue, Suite 250, Alhambra, CA 91803
Tel. 323.728.8300 Fax 323.728.8423

WORK ORDER E170267B

PLAN FILE 860

DRAWING C201

SHEET 33 OF SHEETS 211

PLOTTED: 7/1/2019 11:34:04 AM

THE CITY OF LOS ANGELES OR ITS OFFICERS OR AGENTS SHALL NOT BE RESPONSIBLE FOR THE ACCURACY OR COMPLETENESS OF ELECTRONIC COPIES OF THIS PLAN SHEET.

FILE PATH: A360://Studio City Recreation Center/SCRC-Project Model_Central_Final.rvt

TTLB TEMPLATE REVISION DATE: 09/25/17
SHEET ISSUE

REVISION DATES (DESIGN STAGE ONLY)

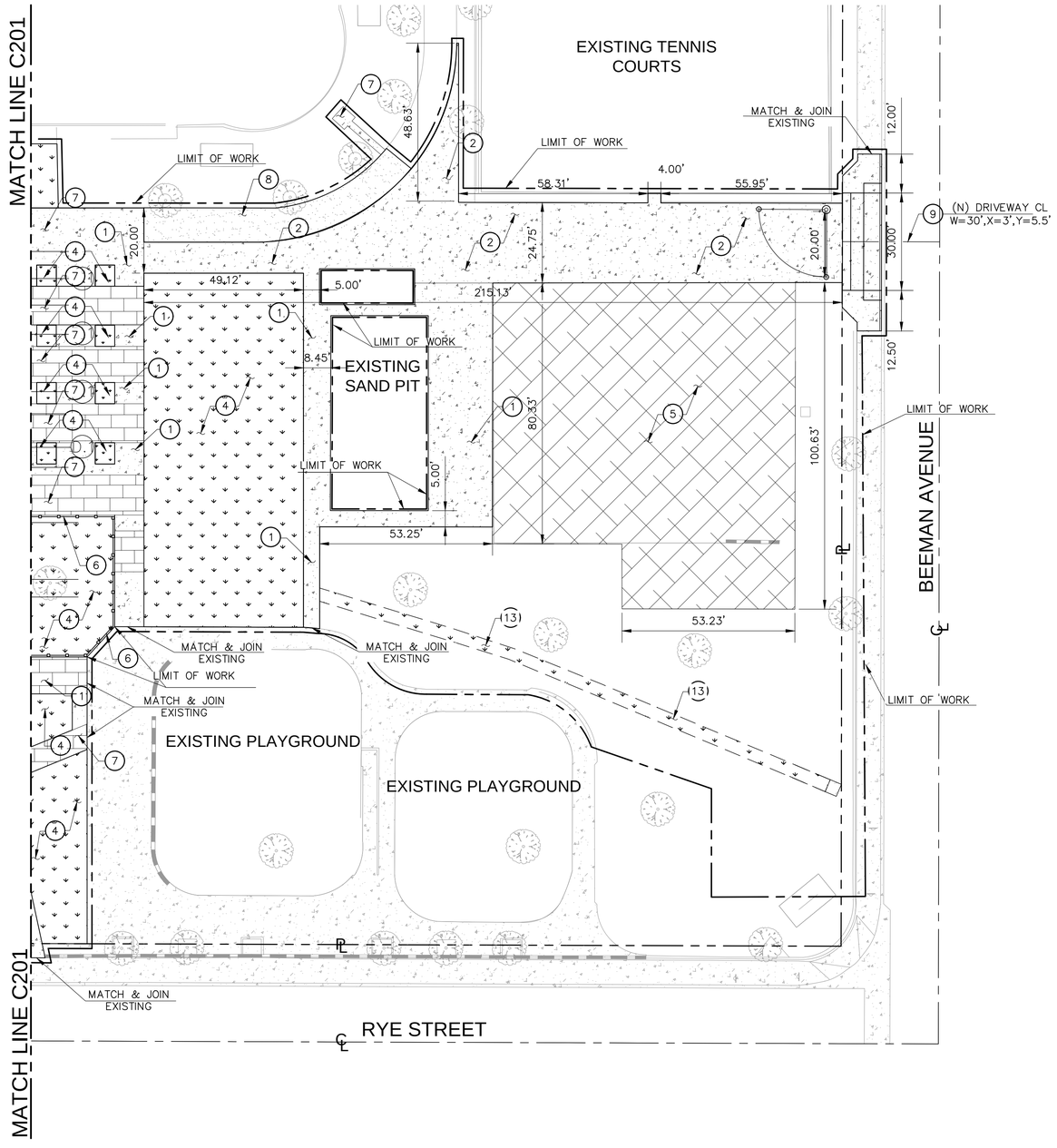

CONSTRUCTION NOTES:

1. CONSTRUCT CONCRETE PAVEMENT PER DETAIL 1 ON SHEET C500.
2. CONSTRUCT TRAFFIC RATED CONCRETE PAVEMENT PER DETAIL 1 ON SHEET C500.
3. NOT USED
4. NEW LANDSCAPE AREA PER LANDSCAPE DRAWINGS.
5. GRIND AND RESURFACE CONCRETE BASKETBALL COURT PER LANDSCAPE DRAWINGS.
6. FENCE PER LANDSCAPE DRAWINGS.
7. INSTALL COLORED/SCORED CONCRETE PER LANDSCAPE DRAWINGS.
8. INSTALL DECOMPOSED GRANITE PER ARCHITECTURAL DRAWINGS.
9. CONSTRUCT DRIVEWAY TYPE 2 PER CITY OF LOS ANGELES S-440-3 W,Y,X PER PLAN.
10. NOT USED
11. NOT USED
12. NOT USED
13. EXISTING SWALE AREA NEW LANSCAPE PER LANDSCAPE DRAWINGS.

LEGEND:

- CONCRETE PAVEMENT
- ASPHALT CONCRETE
- LANDSCAPE AREA
- WALL
- DECOMPOSED GRANITE
- CONCRETE GRINDING

SHEET NOTES:

1. FOR GENERAL NOTES, LEGEND AND ABBREVIATIONS, SEE SHEETS C100 AND C101.
2. SEE ARCHITECTURAL AND LANDSCAPE DRAWINGS FOR OTHER SITE RELATED DIMENSIONS NOT SHOWN ON THIS DRAWING.
3. FOR PAVEMENT MARKINGS AND STRIPING, RAMP WITH HANDRAILS, PLANTER AREA, TRASH ENCLOSURE AND TRANSFORMER ENCLOSURE, SEE ARCHITECTURAL DRAWINGS. FOR LANDSCAPING AND IRRIGATION FEATURES, CONCRETE PAVEMENT PATTERN, TEXTURE AND COLOR INTEGRATION, SEE LANDSCAPE DRAWINGS. FOR GAS, SEWER, ROOF DRAINS, FIRE & DOMESTIC WATER LINES POINTS OF CONNECTION AT BUILDING, SEE MECHANICAL AND PLUMBING DRAWINGS OF THE BUILDING. FOR TRANSFORMER ENCLOSURE AND CONCRETE PAD, SEE ELECTRICAL DRAWINGS.
4. PROVIDE EXPANSION JOINTS WHERE NEW CONCRETE WALK/PAVEMENT ABUTS ANOTHER RIGID STRUCTURE. FOR TYPICAL CONTROL AND EXPANSION JOINTS DETAIL, SEE SHEET C502.
5. GRAY LINES, SYMBOLS, FEATURES INDICATED ON PLAN ARE TO REMAIN OR PROTECT IN PLACE. SEE OFFSITE IMPROVEMENT DRAWINGS FOR OTHER REFERENCES AND INFORMATION.
6. ALL WORK IS NEW UNLESS OTHERWISE NOTED.

SITE PLAN

20 10 0 20 40

SCALE: 1" = 20'

KEY MAP

SCALE: 1" = 400'

BUREAU OF ENGINEERING
OFFICIAL RECORD

CITY OF LOS ANGELES DEPARTMENT OF PUBLIC WORKS
BUREAU OF ENGINEERING

ENGINEERING
CITY OF LOS ANGELES

NO.	REVISION DESCRIPTION	DATE	BY

BUILDING NO. -

INDEX NO. RP-300106

PROFESSIONAL ENGINEER REGISTERED CIVIL ENGINEER No. C36079 Exp. 6/30/20 STATE OF CALIFORNIA

CITY ENGINEER — DATE: 1-24-2019
LIC. NO.: C36079

ARCHITECTURAL DIVISION — DATE: 1-24-2019

TED ALLEN, PE — DATE: 1-24-2019

ENGINEER: VIRGILIO AOANAN
DESIGNED BY: VIRGILIO AOANAN
DRAWN BY: A.WAGGONER
CHECKED BY: VIRGILIO AOANAN
APPROVED BY: MAHMOOD KARIMZADEH, AIA, DEPUTY CITY ENGINEER — DATE: 1-24-2019

CLIENT: DEPARTMENT OF RECREATION AND PARKS
GENERAL MANAGER: MICHAEL A. SHULL

SHEET TITLE: SITE CONTROL PLAN

PROJECT: STUDIO CITY GYMNASIUM

ADDRESS: 12621 RYE STREET, STUDIO CITY, CA 91604

MCA ENGINEERS INC
CIVIL & STRUCTURAL
2411 E. Katella Avenue, Suite 210, Anaheim, CA 92806
Tel: 323.728.5888 Fax: 323.728.5810

WORK ORDER E170267B
PLAN FILE 860
DRAWING C202
SHEET 34 OF SHEETS 211

PLOTTED: 7/1/2019 11:34:04 AM

THE CITY OF LOS ANGELES OR ITS OFFICERS OR AGENTS SHALL NOT BE RESPONSIBLE FOR THE ACCURACY OR COMPLETENESS OF ELECTRONIC COPIES OF THIS PLAN SHEET.

FILE PATH: A360://Studio City Recreation Center/SCRC-Project Model_Central_Final.rvt

TTLB TEMPLATE REVISION DATE: 09/25/17
SHEET ISSUE

REVISION DATES (DESIGN STAGE ONLY)

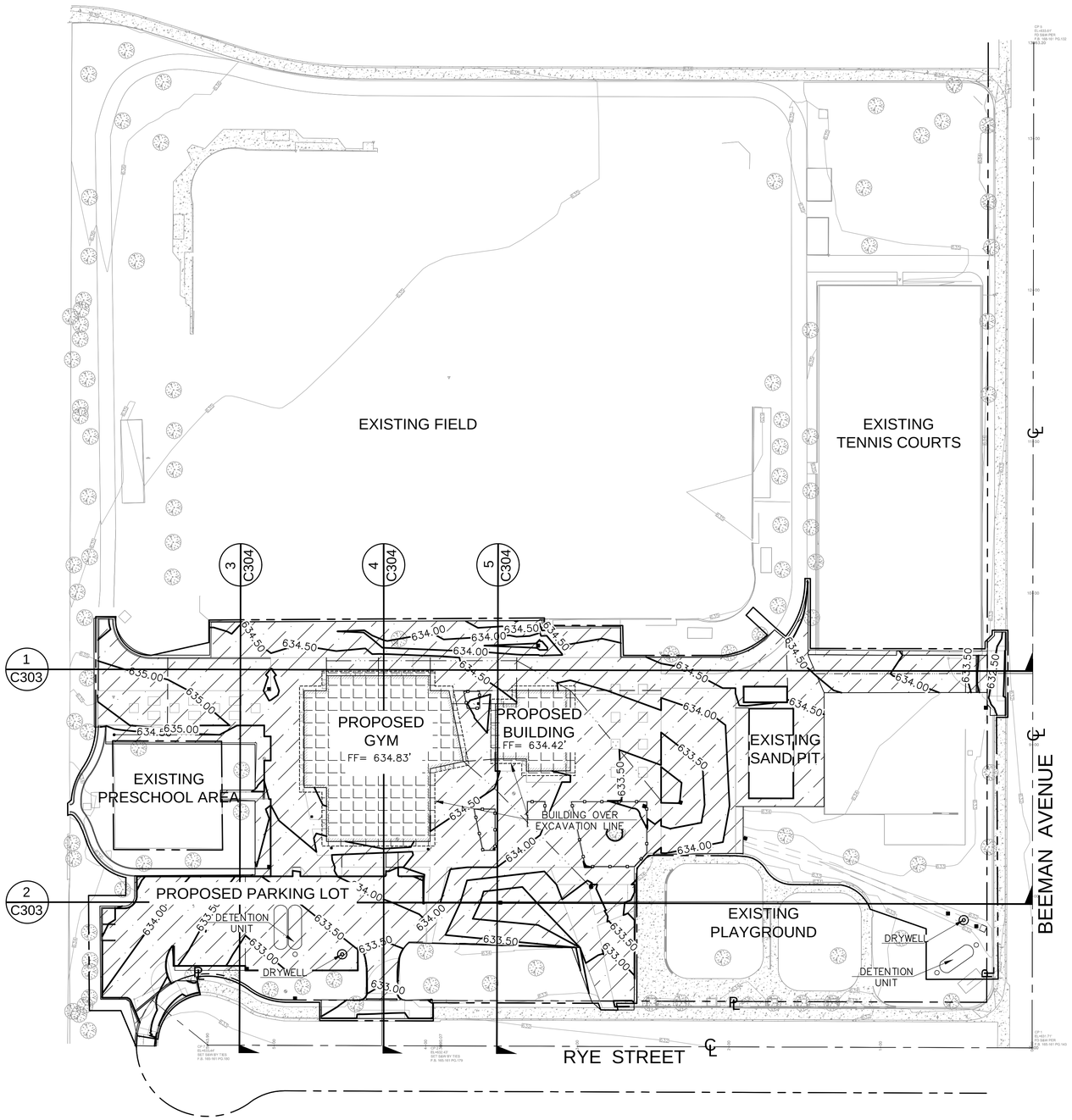

FINAL GRADING NOTES:

1. ALL GRADING SHALL BE PERFORMED UNDER THE SUPERVISION OF THE CITY INSPECTOR AND/OR GEOTECHNICAL ENGINEER.
2. FOR EXCAVATION, FILL, BACKFILL, AND COMPACTION, THE CONTRACTOR SHALL FOLLOW THE RECOMMENDATIONS AS INDICATED WITHIN THE GEOTECHNICAL REPORT.
3. NO GRADING WORK SHALL BE PERFORMED AT ANY TIME WITHOUT AN EROSION CONTROL SYSTEM APPROVED BY THE DISTRICT ENGINEER AND JURISDICTIONAL AGENCY. ANY GRADING WORK SHALL BE PERFORMED WITH AN EROSION CONTROL SYSTEM APPROVED BY THE DISTRICT ENGINEER AND THE JURISDICTIONAL AGENCIES. EROSION CONTROL PLAN SHALL BE PROVIDED BY THE CONTRACTOR.
4. CONTRACTOR SHALL PROVIDE A STORM WATER POLLUTION PREVENTION PLAN (SWPPP) AND EROSION AND SEDIMENTATION CONTROL FOR REVIEW AND APPROVAL BY THE JURISDICTIONAL AGENCIES. USE RECOMMENDATIONS BY THE BEST MANAGEMENT PRACTICES (BMP'S) TO IMPLEMENT CONTROL. USE MINIMUM OF TWO STACKED SANDBAGS AROUND THE PERIPHERY OF THE WORK LIMITS TO AUGMENT THE SYSTEM REQUIRED BY THE AGENCIES HAVING JURISDICTION OVER THE PROJECT.
5. CONSTRUCT DESIGN GRADES SHOWN ON PLAN. CONSTRUCT STRAIGHT GRADES BETWEEN INDICATED ELEVATIONS UNLESS INTERRUPTED BY A GRADE CHANGE LINE.
6. THE CONTRACTOR SHALL NOT BEGIN THE PAVING OPERATION UNTIL THE SUBGRADE HAS BEEN APPROVED BY THE GRADING INSPECTOR AND SOIL ENGINEER.
7. THE CONTRACTOR IS ADVISED THAT THE APPROVAL OF THIS PLAN DOES NOT WAIVE THE REQUIREMENTS FOR EXCAVATIONS CONTAINED IN THE STATE CONSTRUCTION SAFETY ORDERS ENFORCED BY THE STATE DIVISION OF INDUSTRIAL SAFETY.
8. ALL FILL OR BACK FILL SHALL BE COMPACTED IN 6" TO 8" LOOSE LAYERS BY MECHANICAL MEANS TO A MINIMUM 90% RELATIVE COMPACTION AS DETERMINED BY THE ASTM D-1557. THE TOP 12" OF FILL OR BACKFILL SHALL BE COMPACTED TO A MINIMUM 95% RELATIVE COMPACTION.
9. ALL IMPORTED FILL SHALL BE APPROVED AT THE SOURCE PRIOR TO DELIVERY TO THE SITE.
10. SEE ARCHITECTURAL PLAN FOR TOP OF WALL ELEVATION AND SECTION.
11. ALL GRADING SLOPES SHALL BE PLANTED AND SPRINKLERED. (7012.1)
12. STANDARD 12 INCH HIGH BERM IS REQUIRED AT TOP OF ALL GRADED SLOPES. (7013.3)
13. NO FILL TO BE PLACED, UNTIL THE GEOTECHNICAL ENGINEER AND INSPECTOR HAVE INSPECTED AND APPROVED THE BOTTOM OF EXCAVATION.
14. MAN-MADE FILL SHALL BE COMPACTED TO A MINIMUM RELATIVE COMPACTION OF 90% MAX, DRY DENSITY WITHIN 40 FEET BELOW FINISH GRADE, AND 93% OF MAX. DRY DENSITY DEEPER THAN 40 FEET BELOW FINISH GRADE, UNLESS A LOWER RELATIVE COMPACTION (NOT LESS THAN 90% MAX, DRY DENSITY) IS JUSTIFIED BY THE SOILS ENGINEER.
15. TEMPORARY EROSION CONTROL TO BE INSTALLED BETWEEN OCTOBER 1 AND APRIL 15. OBTAIN GRADING INSPECTOR'S AND DEPATMENT OF PUBLIC WORKS APPROVAL OF PROPOSED PROCEDURES. [>200 CY] (7007.1)
16. ALL TEMPORARY EXCAVATIONS SHALL CONFORM TO CALOSHA STANDARDS.
17. EXCAVATION IS NOT PERMITTED WITHIN THE TREE PROTECTION ZONE. CONTRACTOR TO PROVIDE SHORING AS REQUIRED. SEE LANDSCAPE DRAWINGS FOR TREE PROTECTION ZONE LIMITS.

ESTIMATED EARTHWORK QUANTITY

ESTIMATED CUT = 600 CY
ESTIMATED FILL = 500 CY
BUILDING AREA OVER EXC. = 2,800 CY
ESTIMATED EXPORT = 2,900 CY

SITE CUT/FILL

BUILDING OVER-EXCAVATION

NOTES:

1. THE ESTIMATED QUANTITIES PROVIDED ABOVE ARE FOR REFERENCE ONLY TO BE USED FOR JURISDICTIONAL PLAN CHECKING AND PERMITTING PURPOSES ONLY.
2. ESTIMATED EARTHWORK ABOVE IS BASED ON DESIGN FINISH GRADES TO EXISTING GRADES IN SURVEY. THE ESTIMATED EARTHWORK DOES NOT CONSIDER THE THICKNESS OF EACH PAVEMENT MATERIAL, FOUNDATION AND SLAB ON GRADE VOLUMES, THE REMOVAL OF ANY UNSUITABLE MATERIAL, AND THE REMOVAL OF EXISTING BASEMENTS, PITS, VAULTS, TOP SOIL OR VEGETATION.
3. THE ESTIMATED EARTHWORK QUANTITIES DO NOT INCLUDE SHRINKAGE FACTORS DUE TO COMPACTION OR ANY OVER EXCAVATION QUANTITIES.
4. THE CONTRACTOR SHALL CALCULATE HIS OWN EARTHWORK QUANTITIES NECESSARY FOR HIS BID AND WORK. VCA IS NOT RESPONSIBLE AND LIABLE FOR THE CONTRACTOR'S EARTHWORK CALCULATIONS.
5. ESTIMATED EARTHWORK QUANTITIES ABOVE ASSUME THAT ALL ON-SITE MATERIALS ARE SUITABLE FOR BACKFILLING. HOWEVER, ACTUAL EXISTING ON-SITE MATERIALS AND IMPORTED MATERIALS MUST FIRST BE APPROVED BY THE GEOTECHNICAL ENGINEER PRIOR TO INSTALLATION, REMOVAL, OR REPLACEMENT.
6. THE ESTIMATED QUANTITIES WERE CALCULATED AND LIMITED ON ON-SITE AREA ONLY. SEE OFF-SITE IMPROVEMENT FOR SEPARATE EARTHWORK QUANTITY CALCULATIONS.

SHEET NOTES:

1. FOR GENERAL NOTES, LEGEND AND ABBREVIATIONS, SEE SHEETS C100 AND C101.
2. SEE ARCHITECTURAL AND LANDSCAPE DRAWINGS FOR OTHER SITE RELATIVE DIMENSIONS NOT SHOWN ON THIS DRAWING.
3. FOR FINAL GRADING PLAN NOTES, SEE THIS SHEET.
4. FOR ELEVATION SHOWN ON GRADING PLAN SUCH AS TOP OF GRATE, CLEAN OUT, MANHOLE COVER, TOP OF DRAINAGE GRATES, TOP OF RIM CONTRACTOR TO COORDINATE ELEVATION SHOWN ON UTILITY PLANS. REPORT/NOTIFY ENGINEER FOR ANY CONFLICT/DISCREPANCY IN ELEVATION PRIOR TO COMMENCEMENT OF WORK.
5. CONTRACTOR SHALL VERIFY ALL CONDITIONS AND DIMENSIONS AND SHALL REPORT ANY DISCREPANCIES TO THE CPM OR IOR PRIOR TO THE COMMENCEMENT OF ANY WORK.
6. CONTRACTOR SHALL VERIFY JOINING OF NEW IMPROVEMENT TO ADJACENT FEATURES, EXISTING/ MATCH TO EXISTING FEATURES WITH SURVEY INFORMATION, CURRENT SITE CONDITION AND WITH THE DESIGN GRADE & ELEVATIONS AND SHALL REPORT ANY DISCREPANCIES TO THE CPM OR IOR PRIOR TO THE COMMENCEMENT OF WORK.

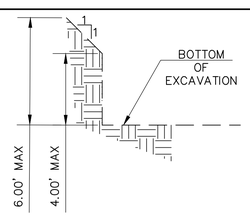

NOTE:

APPLIES TO EXCAVATIONS OUTSIDE THE TREE PROTECTION ZONE (SEE GRADING NOTE 17, THIS PAGE), CONTRACTOR TO PROVIDE SHORING FOR EXCAVATIONS WITHIN THE TREE PROTECTION ZONE AS REQUIRED. SEE LANDSCAPE DRAWINGS FOR TREE PROTECTION ZONE.

1 TEMPORARY EXCAVATION DETAIL
NOT TO SCALE

THE FOLLOWING STATEMENT SIGNED BY BOTH THE SOILS ENGINEER AND GEOLOGIST, SHALL BE ON THE FINAL PLANS:
"THIS PLAN HAS BEEN REVIEWED AND CONFOMRS TO RECCOMEENDATIONS OF SOILS ENGINEEGING/GEOLOGIC REPORTS DATED _____ SIGNATURE AND DATE
_____"

COMPOSITE GRADING PLAN

40 20 0 40 80
SCALE: 1" = 40'

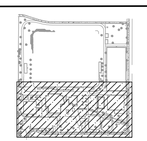

KEY MAP
SCALE: 1" = 400'

BUREAU OF ENGINEERING
OFFICIAL RECORD

ENGINEERING
CITY OF LOS ANGELES

BUREAU OF ENGINEERING

NO.	REVISION DESCRIPTION	DATE	BY

BUILDING NO. -
INDEX NO. RP-300106

PROFESSIONAL ENGINEER · CIVIL · STATE OF CALIFORNIA · No. C36079 · Exp. 6/30/20

DEPARTMENT OF PUBLIC WORKS

		DATE:
CITY ENGINEER		
ARCHITECTURAL DIVISION	LIC. NO. C36079	1-24-2019
ENGINEER: VIRGILIO ADANAN		1-24-2019
DESIGNED BY: VIRGILIO ADANAN		1-24-2019
DRAWN BY: A.WAGGONER		1-24-2019
CHECKED BY: VIRGILIO ADANAN		1-24-2019
APPROVED BY:MAHMOOD KARIMZADEH, AIA, DEPUTY CITY ENGINEER		1-24-2019

TED ALLEN, PE

CITY OF LOS ANGELES

CLIENT: DEPARTMENT OF RECREATION AND PARKS
GENERAL MANAGER: MICHAEL A. SHULL

SHEET TITLE: GRADING PLAN

PROJECT: STUDIO CITY GYMNASIUM

ADDRESS: 12621 RYE STREET, STUDIO CITY, CA 91604

VCA ENGINEERS, INC.
3111 S. Alameda Avenue, Suite 250, Alhambra, CA 91803
Tel. 323.728.8008 Fax 323.728.8422

WORK ORDER
E170267B

PLAN FILE
860

DRAWING
C300

SHEET 35 OF SHEETS 211

PLOTTED: 7/1/2019 11:34:04 AM

THE CITY OF LOS ANGELES OR ITS OFFICERS OR AGENTS SHALL NOT BE RESPONSIBLE FOR THE ACCURACY OR COMPLETENESS OF ELECTRONIC COPIES OF THIS PLAN SHEET.

FILE PATH: A360://Studio City Recreation Center/SCRC-Project Model_Central_Final.rvt

TTLB TEMPLATE REVISION DATE: 09/25/17
SHEET ISSUE

REVISION DATES (DESIGN STAGE ONLY)

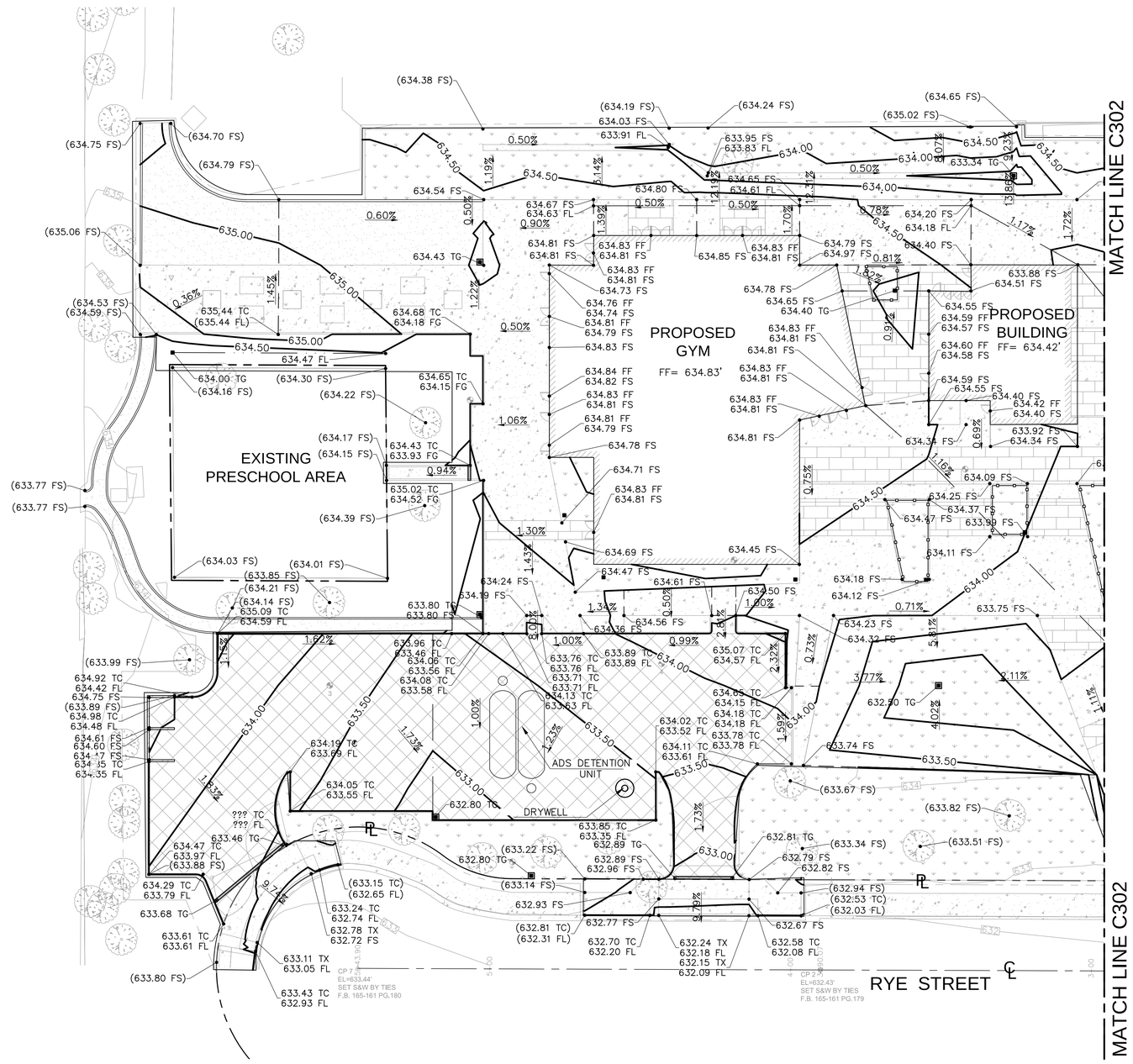

FINAL GRADING NOTES:

1. ALL GRADING SHALL BE PERFORMED UNDER THE SUPERVISION OF THE CITY INSPECTOR AND/OR GEOTECHNICAL ENGINEER.
2. FOR EXCAVATION, FILL, BACKFILL, AND COMPACTION, THE CONTRACTOR SHALL FOLLOW THE RECOMMENDATIONS AS INDICATED WITHIN THE GEOTECHNICAL REPORT.
3. NO GRADING WORK SHALL BE PERFORMED AT ANY TIME WITHOUT AN EROSION CONTROL SYSTEM APPROVED BY THE DISTRICT ENGINEER AND JURISDICTIONAL AGENCY. ANY GRADING WORK SHALL BE PERFORMED WITH AN EROSION CONTROL SYSTEM APPROVED BY THE DISTRICT ENGINEER AND THE JURISDICTIONAL AGENCIES. EROSION CONTROL PLAN SHALL BE PROVIDED BY THE CONTRACTOR.
4. CONTRACTOR SHALL PROVIDE A STORM WATER POLLUTION PREVENTION PLAN (SWPPP) AND EROSION AND SEDIMENTATION CONTROL FOR REVIEW AND APPROVAL BY THE JURISDICTIONAL AGENCIES. USE RECOMMENDATIONS BY THE BEST MANAGEMENT PRACTICES (BMP'S) TO IMPLEMENT CONTROL. USE MINIMUM OF TWO STACKED SANDBAGS AROUND THE PERIPHERY OF THE WORK LIMITS TO AUGMENT THE SYSTEM REQUIRED BY THE AGENCIES HAVING JURISDICTION OVER THE PROJECT.
5. CONSTRUCT DESIGN GRADES SHOWN ON PLAN. CONSTRUCT STRAIGHT GRADES BETWEEN INDICATED ELEVATIONS UNLESS INTERRUPTED BY A GRADE CHANGE LINE.
6. THE CONTRACTOR SHALL NOT BEGIN THE PAVING OPERATION UNTIL THE SUBGRADE HAS BEEN APPROVED BY THE GRADING INSPECTOR AND SOIL ENGINEER.
7. THE CONTRACTOR IS ADVISED THAT THE APPROVAL OF THIS PLAN DOES NOT WAIVE THE REQUIREMENTS FOR EXCAVATIONS CONTAINED IN THE STATE CONSTRUCTION SAFETY ORDERS ENFORCED BY THE STATE DIVISION OF INDUSTRIAL SAFETY.
8. ALL FILL OR BACK FILL SHALL BE COMPACTED IN 6" TO 8" LOOSE LAYERS BY MECHANICAL MEANS TO A MINIMUM 90% RELATIVE COMPACTION AS DETERMINED BY THE ASTM D-1557. THE TOP 12" OF FILL OR BACKFILL SHALL BE COMPACTED TO A MINIMUM 95% RELATIVE COMPACTION.
9. ALL IMPORTED FILL SHALL BE APPROVED AT THE SOURCE PRIOR TO DELIVERY TO THE SITE.
10. SEE ARCHITECTURAL PLAN FOR TOP OF WALL ELEVATION AND SECTION.
11. ALL GRADING SLOPES SHALL BE PLANTED AND SPRINKLERED. (7012.1)
12. STANDARD 12 INCH HIGH BERM IS REQUIRED AT TOP OF ALL GRADED SLOPES. (7013.3)
13. NO FILL TO BE PLACED, UNTIL THE GEOTECHNICAL ENGINEER AND INSPECTOR HAVE INSPECTED AND APPROVED THE BOTTOM OF EXCAVATION.
14. MAN-MADE FILL SHALL BE COMPACTED TO A MINIMUM RELATIVE COMPACTION OF 90% MAX, DRY DENSITY WITHIN 40 FEET BELOW FINISH GRADE, AND 93% OF MAX. DRY DENSITY DEEPER THAN 40 FEET BELOW FINISH GRADE, UNLESS A LOWER RELATIVE COMPACTION (NOT LESS THAN 90% MAX, DRY DENSITY) IS JUSTIFIED BY THE SOILS ENGINEER.
15. TEMPORARY EROSION CONTROL TO BE INSTALLED BETWEEN OCTOBER 1 AND APRIL 15. OBTAIN GRADING INSPECTOR'S AND DEPARTMENT OF PUBLIC WORKS APPROVAL OF PROPOSED PROCEDURES. [>200 CY] (7007.1)
16. ALL TEMPORARY EXCAVATIONS SHALL CONFORM TO CALOSHA STANDARDS.
17. EXCAVATION IS NOT PERMITTED WITHIN THE TREE PROTECTION ZONE. CONTRACTOR TO PROVIDE SHORING AS REQUIRED. SEE LANDSCAPE DRAWINGS FOR TREE PROTECTION ZONE LIMITS.

SHEET NOTES:

1. FOR GENERAL NOTES, LEGEND AND ABBREVIATIONS, SEE SHEETS C100 AND C101.
2. SEE ARCHITECTURAL AND LANDSCAPE DRAWINGS FOR OTHER SITE RELATIVE DIMENSIONS NOT SHOWN ON THIS DRAWING.
3. FOR FINAL GRADING PLAN NOTES, SEE THIS SHEET.
4. FOR ELEVATION SHOWN ON THIS PLAN SUCH AS TOP OF GRATE, CLEAN OUT, MANHOLE COVER, TOP OF DRAINAGE GRATES, TOP OF RIM CONTRACTOR TO COORDINATE ELEVATION SHOWN ON UTILITY PLANS. REPORT/NOTIFY ENGINEER FOR ANY CONFLICT/DISCREPANCY IN ELEVATION PRIOR TO COMMENCEMENT OF WORK.
5. CONTRACTOR SHALL VERIFY ALL CONDITIONS AND DIMENSIONS AND SHALL REPORT ANY DISCREPANCIES TO THE CPM OR IOR PRIOR TO THE COMMENCEMENT OF ANY WORK.
6. CONTRACTOR SHALL VERIFY JOINING OF NEW IMPROVEMENT TO ADJACENT FEATURES, EXISTING/ MATCH TO EXISTING FEATURES WITH SURVEY INFORMATION, CURRENT SITE CONDITION AND WITH THE DESIGN GRADE & ELEVATIONS AND SHALL REPORT ANY DISCREPANCIES TO THE CPM OR IOR PRIOR TO THE COMMENCEMENT OF WORK.

BUREAU OF ENGINEERING OFFICIAL RECORD

GRADING PLAN

20 10 0 20 40

SCALE: 1" = 20'

KEY MAP

SCALE: 1" = 400'

MCA ENGINEERS, INC. 2411 E. Katella Avenue, Suite 210, Anaheim, CA 92806 Tel: 323.728.5588 Fax: 323.728.5543

CITY OF LOS ANGELES
DEPARTMENT OF PUBLIC WORKS
BUREAU OF ENGINEERING

ENGINEERING
CITY OF LOS ANGELES

NO.	REVISION DESCRIPTION	DATE	BY

BUILDING NO. -

INDEX NO. RP-300106

PROFESSIONAL ENGINEER — CIVIL — No. C36079 — Exp. 6/30/20 — STATE OF CALIFORNIA

CITY ENGINEER	DATE:
TED ALLEN, PE	
ARCHITECTURAL DIVISION	
ENGINEER: VIRGILIO AOANAN — LIC. NO.: C36079	1-24-2019
DESIGNED BY: VIRGILIO AOANAN	1-24-2019
DRAWN BY: A.WAGGONER	1-24-2019
CHECKED BY: VIRGILIO AOANAN	1-24-2019
APPROVED BY:MAHMOOD KARIMZADEH, AIA, DEPUTY CITY ENGINEER	1-24-2019

CLIENT: DEPARTMENT OF RECREATION AND PARKS
GENERAL MANAGER: MICHAEL A. SHULL

SHEET TITLE: GRADING PLAN

PROJECT: STUDIO CITY GYMNASIUM

ADDRESS: 12621 RYE STREET, STUDIO CITY, CA 91604

WORK ORDER E170267B

PLAN FILE 860

DRAWING C301

SHEET 36 OF SHEETS 211

PLOTTED: 7/1/2019 11:34:04 AM

THE CITY OF LOS ANGELES OR ITS OFFICERS OR AGENTS SHALL NOT BE RESPONSIBLE FOR THE ACCURACY OR COMPLETENESS OF ELECTRONIC COPIES OF THIS PLAN SHEET.

FILE PATH: A360://Studio City Recreation Center/SCRC-Project Model_Central_Final.rvt

TTLB TEMPLATE REVISION DATE: 09/25/17
SHEET ISSUE

REVISION DATES (DESIGN STAGE ONLY)

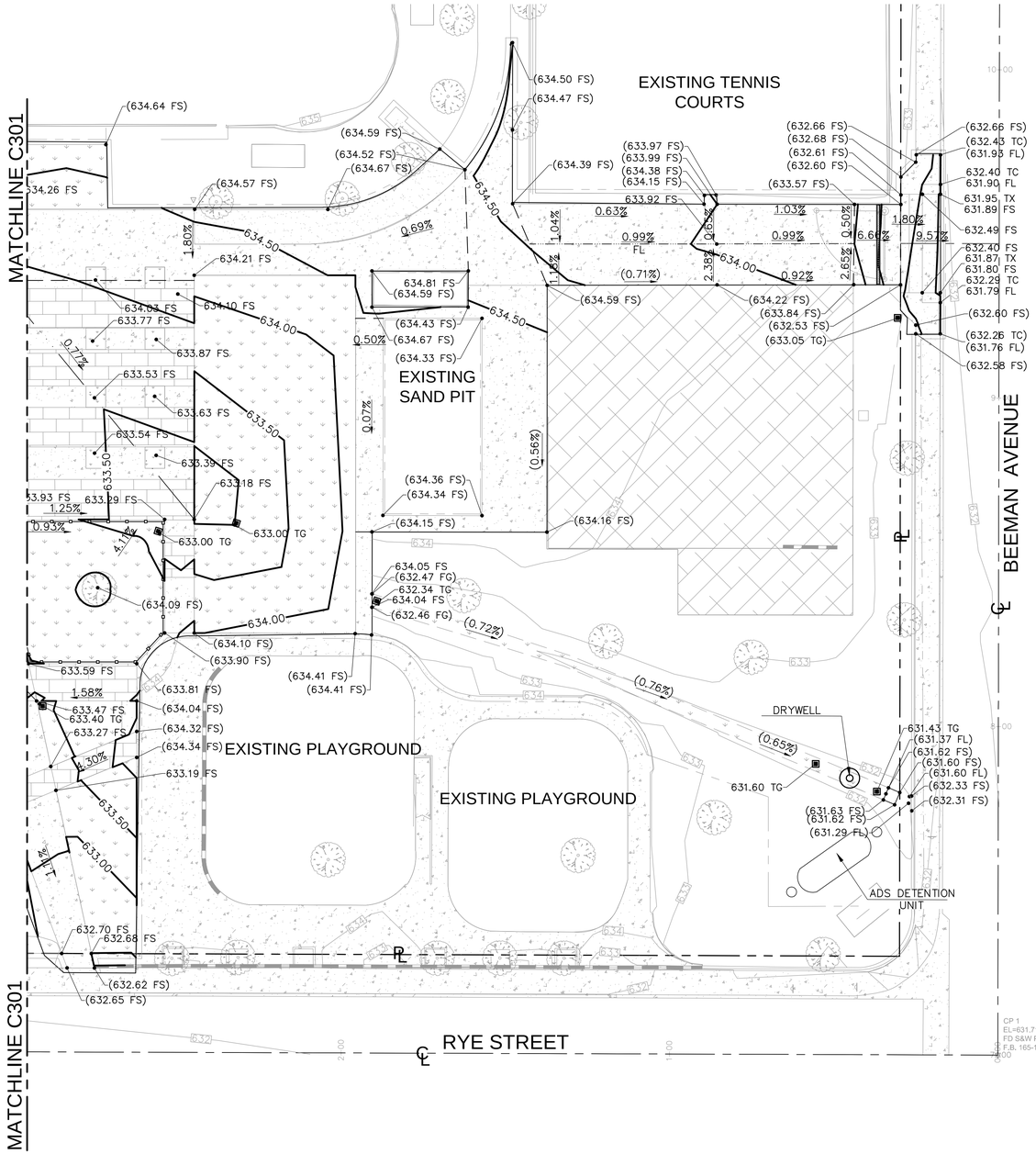

FINAL GRADING NOTES:

1. ALL GRADING SHALL BE PERFORMED UNDER THE SUPERVISION OF THE CITY INSPECTOR AND/OR GEOTECHNICAL ENGINEER.
2. FOR EXCAVATION, FILL, BACKFILL, AND COMPACTION, THE CONTRACTOR SHALL FOLLOW THE RECOMMENDATIONS AS INDICATED WITHIN THE GEOTECHNICAL REPORT.
3. NO GRADING WORK SHALL BE PERFORMED AT ANY TIME WITHOUT AN EROSION CONTROL SYSTEM APPROVED BY THE DISTRICT ENGINEER AND JURISDICTIONAL AGENCY. ANY GRADING WORK SHALL BE PERFORMED WITH AN EROSION CONTROL SYSTEM APPROVED BY THE DISTRICT ENGINEER AND THE JURISDICTIONAL AGENCIES. EROSION CONTROL PLAN SHALL BE PROVIDED BY THE CONTRACTOR.
4. CONTRACTOR SHALL PROVIDE A STORM WATER POLLUTION PREVENTION PLAN (SWPPP) AND EROSION AND SEDIMENTATION CONTROL FOR REVIEW AND APPROVAL BY THE JURISDICTIONAL AGENCIES. USE RECOMMENDATIONS BY THE BEST MANAGEMENT PRACTICES (BMP'S) TO IMPLEMENT CONTROL. USE MINIMUM OF TWO STACKED SANDBAGS AROUND THE PERIPHERY OF THE WORK LIMITS TO AUGMENT THE SYSTEM REQUIRED BY THE AGENCIES HAVING JURISDICTION OVER THE PROJECT.
5. CONSTRUCT DESIGN GRADES SHOWN ON PLAN. CONSTRUCT STRAIGHT GRADES BETWEEN INDICATED ELEVATIONS UNLESS INTERRUPTED BY A GRADE CHANGE LINE.
6. THE CONTRACTOR SHALL NOT BEGIN THE PAVING OPERATION UNTIL THE SUBGRADE HAS BEEN APPROVED BY THE GRADING INSPECTOR AND SOIL ENGINEER.
7. THE CONTRACTOR IS ADVISED THAT THE APPROVAL OF THIS PLAN DOES NOT WAIVE THE REQUIREMENTS FOR EXCAVATIONS CONTAINED IN THE STATE CONSTRUCTION SAFETY ORDERS ENFORCED BY THE STATE DIVISION OF INDUSTRIAL SAFETY.
8. ALL FILL OR BACK FILL SHALL BE COMPACTED IN 6" TO 8" LOOSE LAYERS BY MECHANICAL MEANS TO A MINIMUM 90% RELATIVE COMPACTION AS DETERMINED BY THE ASTM D-1557. THE TOP 12" OF FILL OR BACKFILL SHALL BE COMPACTED TO A MINIMUM 95% RELATIVE COMPACTION.
9. ALL IMPORTED FILL SHALL BE APPROVED AT THE SOURCE PRIOR TO DELIVERY TO THE SITE.
10. SEE ARCHITECTURAL PLAN FOR TOP OF WALL ELEVATION AND SECTION.
11. ALL GRADING SLOPES SHALL BE PLANTED AND SPRINKLERED. (7012.1)
12. STANDARD 12 INCH HIGH BERM IS REQUIRED AT TOP OF ALL GRADED SLOPES. (7013.3)
13. NO FILL TO BE PLACED, UNTIL THE GEOTECHNICAL ENGINEER AND INSPECTOR HAVE INSPECTED AND APPROVED THE BOTTOM OF EXCAVATION.
14. MAN-MADE FILL SHALL BE COMPACTED TO A MINIMUM RELATIVE COMPACTION OF 90% MAX, DRY DENSITY WITHIN 40 FEET BELOW FINISH GRADE, AND 93% OF MAX. DRY DENSITY DEEPER THAN 40 FEET BELOW FINISH GRADE, UNLESS A LOWER RELATIVE COMPACTION (NOT LESS THAN 90% MAX, DRY DENSITY) IS JUSTIFIED BY THE SOILS ENGINEER.
15. TEMPORARY EROSION CONTROL TO BE INSTALLED BETWEEN OCTOBER 1 AND APRIL 15. OBTAIN GRADING INSPECTOR'S AND DEPARTMENT OF PUBLIC WORKS APPROVAL OF PROPOSED PROCEDURES. [>200 CY] (7007.1)
16. ALL TEMPORARY EXCAVATIONS SHALL CONFORM TO CALOSHA STANDARDS.
17. EXCAVATION IS NOT PERMITTED WITHIN THE TREE PROTECTION ZONE. CONTRACTOR TO PROVIDE SHORING AS REQUIRED. SEE LANDSCAPE DRAWINGS FOR TREE PROTECTION ZONE LIMITS.

SHEET NOTES:

1. FOR GENERAL NOTES, LEGEND AND ABBREVIATIONS, SEE SHEETS C100 AND C101.
2. SEE ARCHITECTURAL AND LANDSCAPE DRAWINGS FOR OTHER SITE RELATIVE DIMENSIONS NOT SHOWN ON THIS DRAWING.
3. FOR FINAL GRADING PLAN NOTES, SEE THIS SHEET.
4. FOR ELEVATION SHOWN ON THIS PLAN SUCH AS TOP OF GRATE, CLEAN OUT, MANHOLE COVER, TOP OF DRAINAGE GRATES, TOP OF RIM CONTRACTOR TO COORDINATE ELEVATION SHOWN ON UTILITY PLANS. REPORT/NOTIFY ENGINEER FOR ANY CONFLICT/DISCREPANCY IN ELEVATION PRIOR TO COMMENCEMENT OF WORK.
5. CONTRACTOR SHALL VERIFY ALL CONDITIONS AND DIMENSIONS AND SHALL REPORT ANY DISCREPANCIES TO THE CPM OR IOR PRIOR TO THE COMMENCEMENT OF ANY WORK.
6. CONTRACTOR SHALL VERIFY JOINING OF NEW IMPROVEMENT TO ADJACENT FEATURES, EXISTING/ MATCH TO EXISTING FEATURES WITH SURVEY INFORMATION, CURRENT SITE CONDITION AND WITH THE DESIGN GRADE & ELEVATIONS AND SHALL REPORT ANY DISCREPANCIES TO THE CPM OR IOR PRIOR TO THE COMMENCEMENT OF WORK.

BUREAU OF ENGINEERING
OFFICIAL RECORD

GRADING PLAN

20 10 0 20 40
SCALE: 1" = 20'

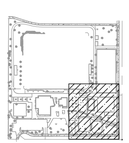

KEY MAP
SCALE: 1" = 400'

MCA ENGINEERS INC
3451 E. Anaheim Street, Suite 220, Anaheim, CA 92806
Tel: 323.728.5848 Fax: 323.728.5842

CITY OF LOS ANGELES
DEPARTMENT OF PUBLIC WORKS
BUREAU OF ENGINEERING
ENGINEERING
CITY OF LOS ANGELES

NO.	REVISION DESCRIPTION	DATE	BY

BUILDING NO. -
INDEX NO. RP-300106

PROFESSIONAL ENGINEER — REGISTERED CIVIL ENGINEER — No. C36079 — Exp. 6/30/20 — STATE OF CALIFORNIA

CITY ENGINEER	DATE:
TED ALLEN, PE	1-24-2019
ARCHITECTURAL DIVISION	
ENGINEER: VIRGILIO ADANAN LIC. NO.: C36079	1-24-2019
DESIGNED BY: VIRGILIO ADANAN	1-24-2019
DRAWN BY: A WAGGONER	1-24-2019
CHECKED BY: VIRGILIO ADANAN	1-24-2019
APPROVED BY:MAHMOOD KARIMZADEH, AIA, DEPUTY CITY ENGINEER	1-24-2019

CLIENT: DEPARTMENT OF RECREATION AND PARKS
GENERAL MANAGER: MICHAEL A. SHULL
SHEET TITLE: GRADING PLAN
PROJECT: STUDIO CITY GYMNASIUM
ADDRESS: 12621 RYE STREET, STUDIO CITY, CA 91604

WORK ORDER E170267B
PLAN FILE 860
DRAWING C302
SHEET 37 OF SHEETS 211

PLOTTED: 7/1/2019 11:34:04 AM

THE CITY OF LOS ANGELES OR ITS OFFICERS OR AGENTS SHALL NOT BE RESPONSIBLE FOR THE ACCURACY OR COMPLETENESS OF ELECTRONIC COPIES OF THIS PLAN SHEET.

FILE PATH: A360://Studio City Recreation Center/SCRC-Project Model_Central_Final.rvt

TTLB TEMPLATE REVISION DATE: 09/25/17
SHEET ISSUE

REVISION DATES (DESIGN STAGE ONLY)

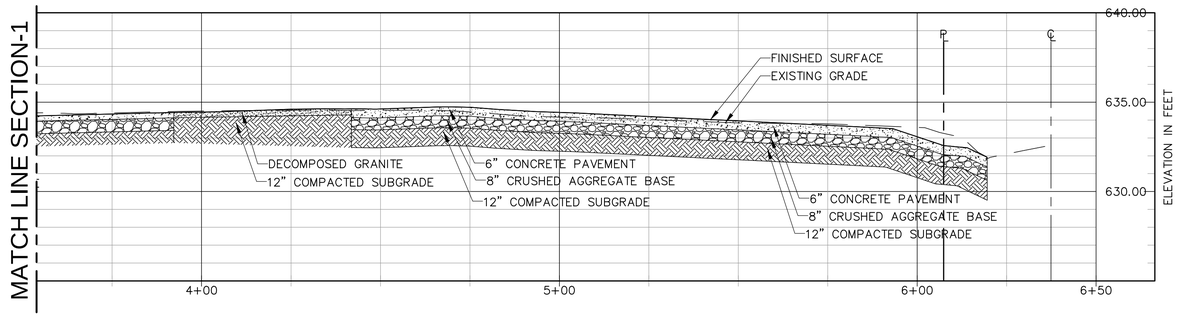

GRADING SECTION-1 (1 / C300)
SCALE HOR 1"=20' VER 1"=4'

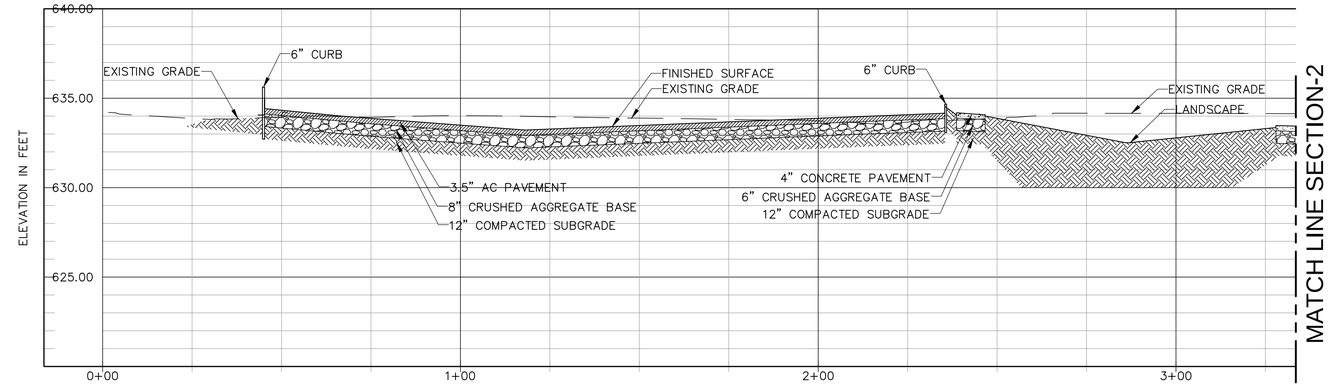

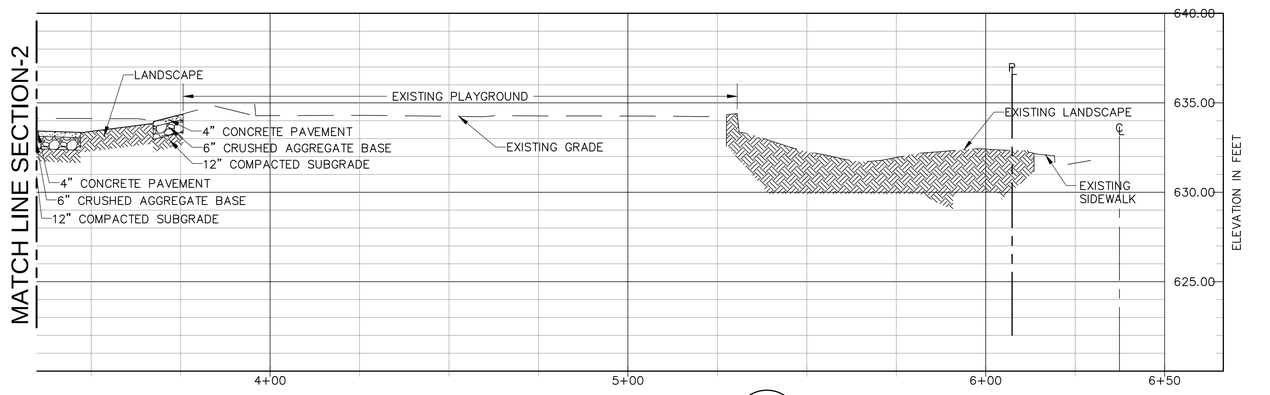

GRADING SECTION-2 (2 / C300)
SCALE HOR 1"=20' VER 1"=4'

BUREAU OF ENGINEERING
OFFICIAL RECORD

MCA ENGINEERS, INC.
2151 E. Katella Avenue, Suite 220, Anaheim, CA 92806
Tel: 323.278.9588 Fax: 323.728.9043

BUREAU OF ENGINEERING
DEPARTMENT OF PUBLIC WORKS
CITY OF LOS ANGELES

ENGINEERING
CITY OF LOS ANGELES

NO.	REVISION DESCRIPTION	DATE	BY

BUILDING NO. -

INDEX NO. RP-300106

PROFESSIONAL ENGINEER — REGISTERED — TED C. ALLEN — No. C36079 Exp. 6/30/20 — CIVIL — STATE OF CALIFORNIA

CITY ENGINEER

	DATE:
ARCHITECTURAL DIVISION	
ENGINEER: VIRGILIO AOANAN LIC. NO.: C36079	1-24-2019
DESIGNED BY: VIRGILIO AOANAN	1-24-2019
DRAWN BY: A.WAGGONER	1-24-2019
CHECKED BY: VIRGILIO AOANAN	1-24-2019
APPROVED BY:MAHMOOD KARIMZADEH, AIA, DEPUTY CITY ENGINEER	1-24-2019

TED ALLEN, PE

CLIENT: DEPARTMENT OF RECREATION AND PARKS
GENERAL MANAGER: MICHAEL A. SHULL

SHEET TITLE: GRADING SECTIONS

PROJECT: STUDIO CITY GYMNASIUM

ADDRESS: 12621 RYE STREET, STUDIO CITY, CA 91604

WORK ORDER E170267B
PLAN FILE 860
DRAWING C303
SHEET 38 OF SHEETS 211

PLOTTED: 7/1/2019 11:34:04 AM

THE CITY OF LOS ANGELES OR ITS OFFICERS OR AGENTS SHALL NOT BE RESPONSIBLE FOR THE ACCURACY OR COMPLETENESS OF ELECTRONIC COPIES OF THIS PLAN SHEET.

FILE PATH: A360://Studio City Recreation Center/SCRC-Project Model_Central_Final.rvt

TTLB TEMPLATE REVISION DATE: 09/25/17
SHEET ISSUE

REVISION DATES (DESIGN STAGE ONLY)

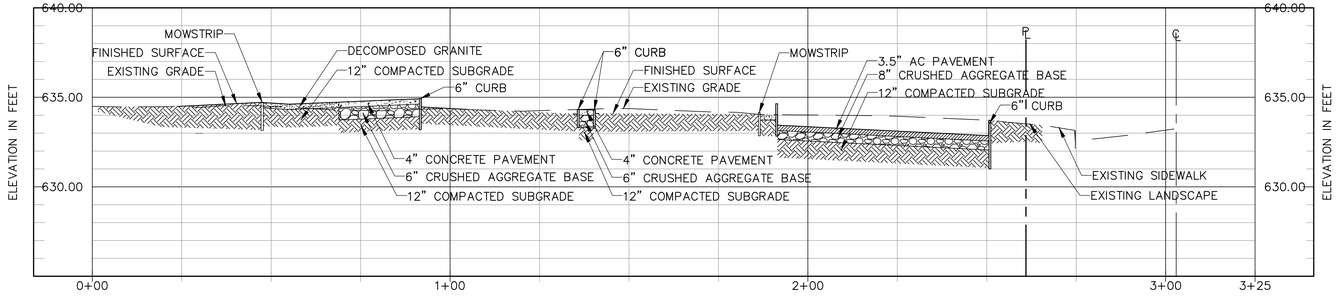

GRADING SECTION-3 (3 / C300)
SCALE HOR 1"=20' VER 1"=4'

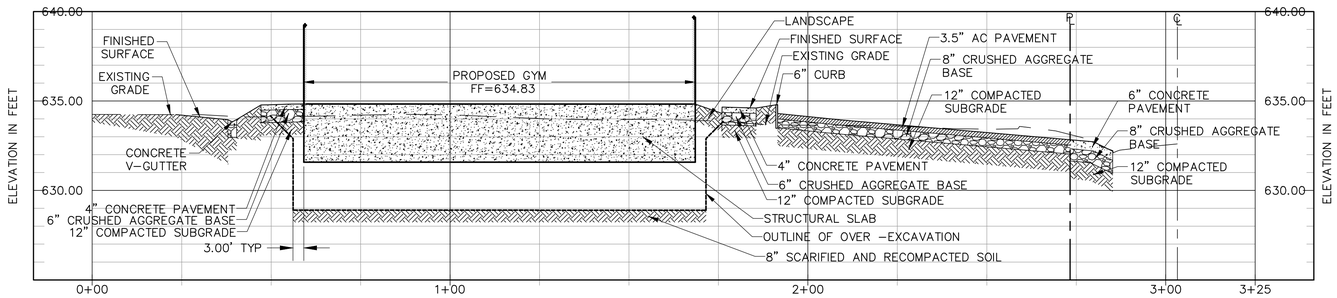

GRADING SECTION-4 (4 / C300)
SCALE HOR 1"=20' VER 1"=4'

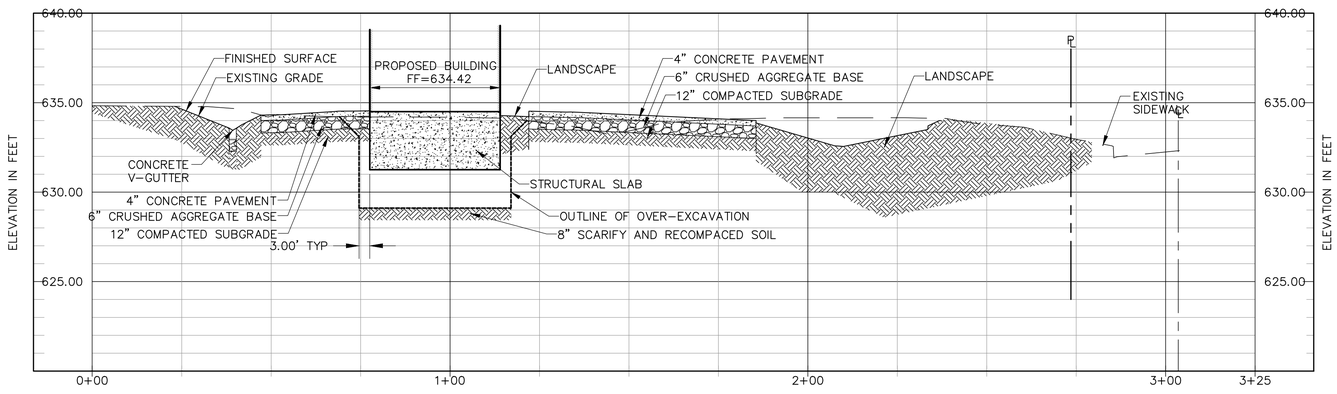

GRADING SECTION-5 (5 / C300)
SCALE HOR 1"=20' VER 1"=4'

THE CITY OF LOS ANGELES OR ITS OFFICERS OR AGENTS SHALL NOT BE RESPONSIBLE FOR THE ACCURACY OR COMPLETENESS OF ELECTRONIC COPIES OF THIS PLAN SHEET.

FILE PATH: A360://Studio City Recreation Center/SCRC-Project Model_Central_Final.rvt

TTLB TEMPLATE REVISION DATE: 09/25/17
SHEET ISSUE

REVISION DATES (DESIGN STAGE ONLY)

BUREAU OF ENGINEERING
CITY OF LOS ANGELES

BUILDING NO. -
INDEX NO. RP-300106

NO.	REVISION DESCRIPTION	DATE	BY

DEPARTMENT OF PUBLIC WORKS

TED ALLEN, PE
CITY ENGINEER

ARCHITECTURAL DIVISION

ENGINEER: VIRGILIO AOANAN LIC. NO.: C36079 DATE: 1-24-2019
DESIGNED BY: VIRGILIO AOANAN 1-24-2019
DRAWN BY: A.WAGGONER 1-24-2019
CHECKED BY: VIRGILIO AOANAN 1-24-2019
APPROVED BY: MAHMOOD KARIMZADEH, AIA, DEPUTY CITY ENGINEER 1-24-2019

CITY OF LOS ANGELES
CLIENT: DEPARTMENT OF RECREATION AND PARKS
GENERAL MANAGER: MICHAEL A. SHULL

SHEET TITLE: GRADING SECTIONS
PROJECT: STUDIO CITY GYMNASIUM
ADDRESS: 12621 RYE STREET, STUDIO CITY, CA 91604

MCA ENGINEERS, INC.
2411 E. Katella Avenue, Suite 210, Anaheim, CA 92806
Tel: 323.728.5588 Fax: 323.728.5543

BUREAU OF ENGINEERING OFFICIAL RECORD

WORK ORDER E170267B
PLAN FILE 860
DRAWING C304
SHEET 39 OF SHEETS 211

PLOTTED: 7/1/2019 11:34:04 AM

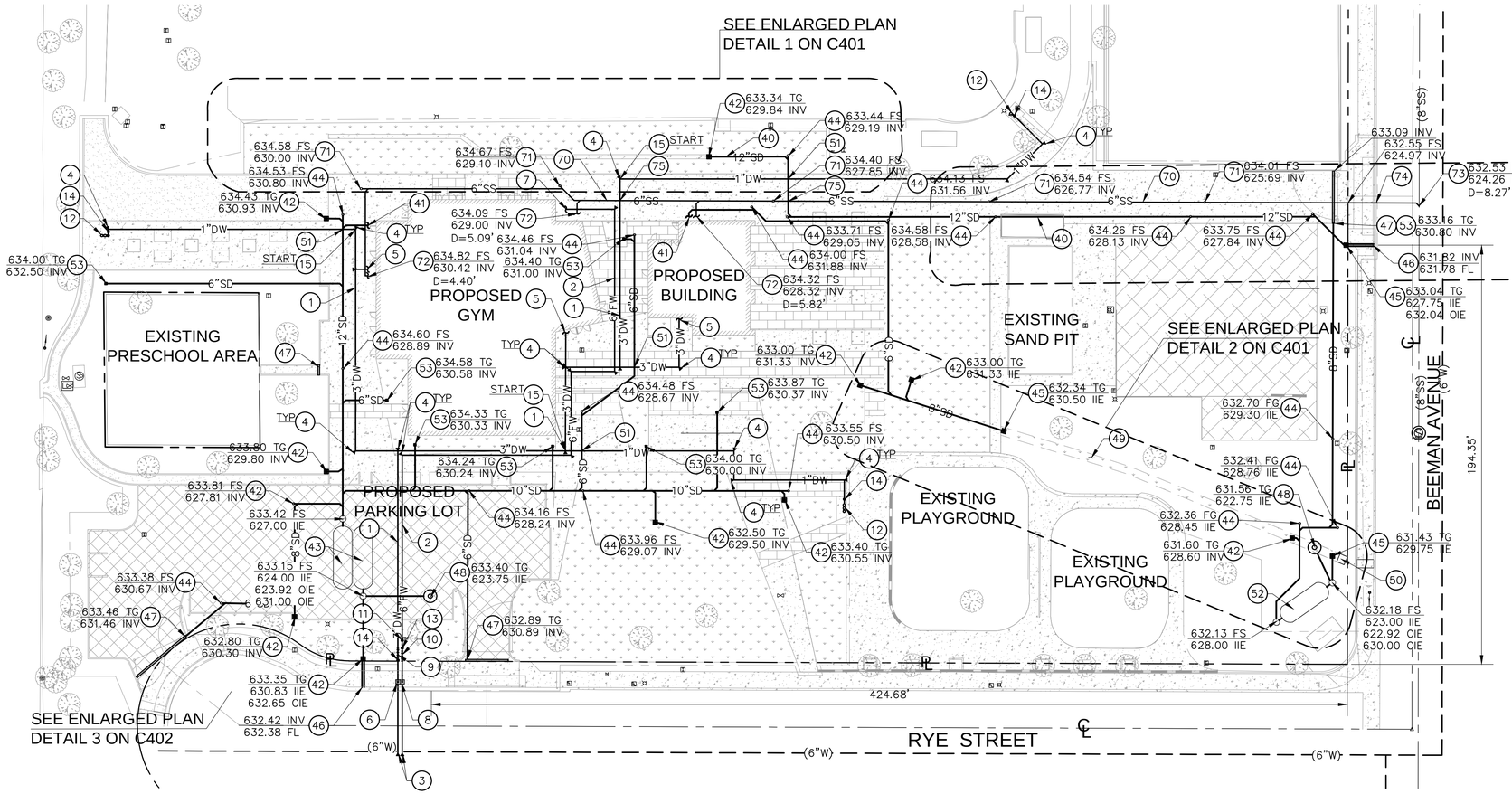

SHEET NOTES:

1. FOR LEGEND AND ABBREVIATIONS AND OTHER NOTES, SEE SHEET C100 AND C101.
2. SEE SHEET C200 AND ARCHITECTURAL DRAWINGS FOR OTHER SITE RELATIVE DIMENSIONS NOT SHOWN ON THIS DRAWING.
3. EXISTING UTILITY INFORMATION IS BASED ON THE FIELD SURVEY INFORMATION PROVIDED BY THE CITY.
4. WATER PURVEYOR WILL INSTALL/PROVIDE FROM MAIN WATERLINE TO WATER METER. THE CONTRACTOR SHALL CONTACT THE UTILITY PURVEYOR SERVICES REPRESENTATIVE TO ARRANGE FOR A PRECONSTRUCTION MEETING TO BE HELD AT LEAST TWO WEEKS PRIOR TO THE ANTICIPATED START OF CONSTRUCTION.
5. THE CONTRACTOR SHALL COMPLY WITH ALL CONDITIONS OR REQUIREMENTS OF PERMITS APPLICABLE TO THIS PROJECT.
6. THE CONTRACTOR SHALL BE RESPONSIBLE FOR IDENTIFYING AND LOCATING ALL SUBSTRUCTURES THAT MAY AFFECT THIS INSTALLATION, PRIOR TO INSTALLATION AND TRENCHING.
7. THE CONTRACTOR SHALL FURNISH, INSTALL AND TEST ALL PIPING FOR WATER IN A SITE, INCLUDING FIRE SERVICE AND HYDRANTS, AND THE DOMESTIC WATER SYSTEM. THE CONTRACTOR SHALL ALSO BE RESPONSIBLE FOR ALL THE WATER APPURTENANCES, VALVES WATER METERS (SUB–METERS), FITTINGS, THRUST BLOCKS OR RESTRAINT SYSTEM, AND FINAL CHLORINATION/ DISINFECTION OF THE WHOLE WATER DISTRIBUTION SYSTEM IN THE PROJECT.
8. FIRE DEPARTMENT CONNECTION HOSE CONNECTIONS SHALL BE OF AN APPROVED TYPE, PROPERLY SUPPORTED, AND LOCATED WITHOUT INTERFERENCE FROM NEARBY OBSTRUCTIONS AND ON THE STREET SIDE OF THE BUILDING(S) WHERE APPROVED BY THE AUTHORITY HAVING JURISDICTION (AHJ'S).
9. FIRE DEPARTMENT CONNECTION(S) SHALL BE IDENTIFIED BY A SIGN HAVING RAISED LETTERS AT LEAST 1–INCH IN SIZE, CAST ON A PLATE OF FITTING ("AUTO SPKR", OR "OPEN SPKR", "STANDPIPE"), ETC.
10. PIPING SHALL BE "LISTED" FOR FIRE PROTECTION SERVICE AND COMPLY WITH AWWA STANDARDS, WHERE APPLICABLE. FITTINGS SHALL BE OF AN "APPROVED" TYPE.
11. ALL CONTROL VALVES SHALL BE "LISTED" INDICATING TYPE UNLESS A NON–INDICATING VALVE, SUCH AS AN UNDERGROUND GATE VALVE WITH APPROVED ROADWAY BOX COMPLETE WITH T–WRENCH, IS ACCEPTABLE TO THE AUTHORITY HAVING JURISDICTION (AHJ'S).
12. FOR DOMESTIC WATER LINE PIPE SIZE 2 1/2" AND SMALLER USE COPPER TUBING, TYPE L HARD. PROVIDE PIPE CORROSION PROTECTION.
13. ALL TEES, PLUGS, CAPS, BENDS, AND HYDRANT BRANCHES ON PIPE INSTALLED UNDERGROUND SHALL BE RESTRAINED (PIPE CLAMPS AND TIE–RODS, THRUST BLOCKS, LOCKED MECHANICAL OR PUSH–ON JOINTS, MECHANICAL JOINTS UTILIZING SET SCREW RETAINER GLANDS, OR OTHER APPROVED METHODS) AGAINST MOVEMENT.
14. DEPTH OF COVER FOR DOMESTIC AND FIRE PIPES SHALL BE 36–INCHES (MINIMUM).
15. THE TRENCH SHALL BE BACKFILLED BETWEEN JOINTS BEFORE PRESSURE TESTING TO PREVENT MOVEMENT OF PIPE.
16. ALL UNDERGROUND PIPING SHALL BE FLUSHED AT THE MINIMUM WATER DEMAND RATE OF THE SYSTEM, OR WHEN SUCH RATE IS NOT VERIFIED OR MET, PIPING SHALL BE FLUSHED AT THE MAXIMUM FLOW RATE AVAILABLE TO THE SYSTEM UNDER FIRE CONDITIONS.
17. ALL NEW PRIVATE FIRE SERVICE MAINS SHALL BE HYDROSTATICALLY TESTED AT NOT LESS THAN 20–PSI PRESSURE FOR TWO HOURS, AT 1500 GPM.
18. ALL UNDERGROUND PIPE UNDER 18" OF COVER SHALL BE PROVIDED WITH CONCRETE ENCASEMENT, REFER GRADING AND UTILITY PLAN INDICATED FINISH SURFACE AND INVERT ELEVATION.
19. ALL CATCH BASINS AND DRAINAGE INLETS SHALL BE STENCILED WITH "NO DUMPING, DRAINS TO OCEAN" LOGO.
20. CONTRACTOR SHALL VERIFY ALL CONDITIONS AND DIMENSIONS AND SHALL REPORT ANY DISCREPANCIES TO THE ENGINEER PRIOR TO THE COMMENCEMENT OF ANY WORK.
21. COORDINATE WITH PLUMBING PLAN FOR EXACT LOCATION OF POINT OF CONNECTION BETWEEN PLUMBING AND CIVIL. ADJUST LINE AS REQUIRED.
22. MINIMUM STORM DRAIN LINE PIPE SLOPE AT 0.50%.
23. DIRECT ROOF DOWNSPOUT TO ONSITE STORM DRAINAGE LINE TOWARDS THE INFILTRATION SYSTEM AS INDICATED ON STORM DRAINAGE UTILITY PLAN AND DETAILS.
24. CONTRACTOR TO FIELD VERIFY ACTUAL ELEVATION AND LOCATION OF EXISTING SEWER LINE PRIOR INSTALLATION.
25. CONTRACTOR TO VERIFY ALL CONDITIONS AND DIMENSIONS AND SHALL REPORT ANY DISCREPANCIES TO THE ENGINEER PRIOR TO THE COMMENCEMENT OF ANY WORK.
26. FOR TOP OF RIM, CLEAN OUT COVER ELEVATION, AND MANHOLE COVER ELEVATION, COORDINATE UTILITY PLAN WITH GRADING PLANS; REPORT ANY DISCREPANCIES TO THE ENGINEER PRIOR TO THE COMMENCEMENT OF ANY WORK.

CONSTRUCTION NOTES:

WATER:

1. INSTALL 3"ø PIPE AWWA C900 DOMESTIC WATER LINE. PRESSURE CLASS 200 (DR14). FOR BEDDING DETAIL, SEE DETAIL 5 ON SHEET C500.
2. INSTALL 4"ø AWWA C900 FIRE WATER LINE. PRESSURE CLASS 200 (DR14). FOR BEDDING DETAIL, SEE DETAIL 5 ON SHEET C500.
3. POINT OF CONNECTION TO EXISTING WATER MAINLINE (FOR 3" ø DOMESTIC, 4"ø FOR FIRE WATER). COORDINATE WITH THE UTILITY PURVEYOR FOR CONNECTION REQUIREMENT, PERMIT AND FEES.
4. INSTALL THRUST BLOCK PER DETAIL 6 ON SHEET C500.
5. CONNECT TO BUILDING DOMESTIC WATER LINE. COORDINATE AND MATCH LOCATION WITH BUILDING PLUMBING.
6. 3"ø DOMESTIC WATER METER. COORDINATE WITH WATER PURVEYOR.
7. CONNECT TO BUILDING FIRE WATER LINE. COORDINATE AND MATCH LOCATION WITH BUILDING PLUMBING. PROVIDE REDUCER FITTINGS AS REQUIRED TO MATCH AND JOIN WITH BUILDING PLUMBING.
8. 4"ø FIREWATER CONNECTION VAULT/METER. COORDINATE WITH WATER PURVEYOR.
9. INSTALL 3"ø REDUCED PRESSURE BACKFLOW PREVENTER ASSEMBLY CLA–VAL MODEL RP–4, OR APPROVED EQUAL. COORDINATE WITH WATER PURVEYOR FOR AN APPROVED BACKFLOW DEVICE PRIOR ORDERING.
10. INSTALL 4" DOUBLE CHECK DETECTOR ASSEMBLY WATTS 350ADA OR APPROVED EQUAL. COORDINATE WITH WATER PURVEYOR FOR AN APPROVED BACKFLOW DEVICE PRIOR ORDERING.
11. FIRE DEPARTMENT CONNECTION PER DETAIL 4 ON SHEET C500.
12. CONNECT TO DRINKING WATER FOUNTAIN PER ARCHITECTURAL PLAN. PROVIDE REDUCER FITTINGS AS REQUIRED.
13. INSTALL PIV PER DETAIL 3 ON SHEET C503.
14. INSTALL GATE VALVE WITH YARD BOX.
15. INSTALL COPPER TUBING, TYPE L HARD FOR 1"ø PIPES SEE PLAN FOR LOCATION. PROVIDE PIPE EROSION PROTECTION. FOR BEDDING DETAIL, SEE DETAIL 5 ON SHEET C500.

STORM DRAIN

40. INSTALL SCH 80 STORM DRAIN PIPE. SEE PLAN FOR SIZES. FOR BEDDING DETAIL, SEE DETAIL 5 ON SHEET C500. PROVIDE ENCASEMENT IF COVER IS UNDER 18" OR USE CAST IRON PIPE.
41. CONNECT TO BUILDING DOWNSPOUT. COORDINATE AND MATCH LOCATION WITH THE BUILDING PLUMBING AND ARCHITECTURAL DRAWINGS. PROVIDE REDUCING FITTINGS AS REQUIRED TO MATCH SIZE OF BUILDING LINE.
42. CONSTRUCT 18"X18" CATCH BASIN PER DETAIL 2 ON SHEET C501. INSTALL STENCIL IN BLUE PAINT NEAR CATCH BASIN TO READ "NO DUMPING, DRAINS TO OCEAN" PER DETAIL 3 ON SHEET C501.
43. INSTALL ADS DETENTION STRUCTURE PER DETAIL 1 ON SHEETS C504 AND C505.
44. INSTALL STORM DRAIN CLEANOUT PER DETAIL 1 ON SHEET 502.
45. BUBBLER CATCH BASIN PER DETAIL 4 ON SHEET C501. INSTALL STENCIL IN BLUE PAINT NEAR CATCH BASIN TO READ "NO DUMPING, DRAINS TO OCEAN" PER DETAIL 3 ON SHEET C501.
46. INSTALL 12" PARKWAY DRAIN PER APWA S–151–2.
47. TRENCH DRAIN PER DETAIL 4 ON SHEET C502.
48. MAXWELL DRYWELL PER DETAIL 2 ON SHEET C505. COORDINATE WITH MANUFACTURER FOR INSTALLATION.
49. EXISTING SWALE AREA.
50. CONCRETE DESILTING AREA PER DETAIL 1 ON C501.
51. AT CROSSING BETWEEN STORM DRAIN LINE AND WATER LINE, CONTRACTOR TO PROVIDE 12" MINIMUM CLEARANCE FROM INVERT OF WATER LINE TO TOP OF STORM DRAIN LINE.
52. INSTALL ADS DETENTION STRUCTURE PER DETAIL 1 ON SHEET C504 AND C505.
53. INSTALL 9" NDS CATCH BASIN MODEL 900GRKIT OR APPROVED EQUAL. INSTALL STENCIL IN BLUE PAINT NEAR CATCH BASIN TO READ "NO DUMPING, DRAINS TO OCEAN" PER DETAIL 3 ON SHEET C501.

SEWER

70. INSTALL 6" ABS SEWER LINE.
71. INSTALL SEWER CLEAN OUT PER DETAIL 1 ON SHEET C502.
72. CONNECT TO BUILDING/SITE SEWER LINE. COORDINATE AND MATCH LOCATION WITH THE BUILDING PLUMBING DRAWINGS. PROVIDE REDUCING FITTING AS REQUIRED TO MATCH SIZE OF BUILDING SEWER.
73. CONNECT TO EXISTING 8" SEWER MAIN LINE.
74. INSTALL VCP SEWER LINE HOUSE CONNECTION FROM STREET MAIN SEWER LINE TO PROPERTY LINE PER CITY.
75. AT CROSSING BETWEEN STORM DRAIN LINE OR WATER LINE AND SANITARY SEWER LINE, CONTRACTOR TO PROVIDE 12" MINIMUM CLEARANCE FROM INVERT OF DW OR SD LINE TO TOP OF SEWER PIPE.

BUREAU OF ENGINEERING
OFFICIAL RECORD

COMPOSITE UTILITY PLAN
30 15 0 30 60
SCALE: 1" = 30'

KEY MAP
SCALE: 1" = 400'

MCA ENGINEERS, INC.
3451 S. Bradford Avenue, Suite 200, Altadena, CA 91006
Tel: 323.258.6688 Fax: 323.726.8042

CITY OF LOS ANGELES
DEPARTMENT OF PUBLIC WORKS
BUREAU OF ENGINEERING

ENGINEERING
CITY OF LOS ANGELES

NO.	REVISION DESCRIPTION	DATE	BY

BUILDING NO. -
INDEX NO. RP-300106

PROFESSIONAL ENGINEER — CIVIL — No. C36079 — Exp. 6/30/20 — STATE OF CALIFORNIA

CITY ENGINEER	DATE:	1-24-2019
TED ALLEN, PE		
ARCHITECTURAL DIVISION		1-24-2019
ENGINEER: VIRGILIO AOANAN	LIC. NO.: C36079	1-24-2019
DESIGNED BY: VIRGILIO AOANAN		1-24-2019
DRAWN BY: A.WAGGONER		
CHECKED BY: VIRGILIO AOANAN		1-24-2019
APPROVED BY:MAHMOOD KARIMZADEH, AIA, DEPUTY CITY ENGINEER		1-24-2019

CITY OF LOS ANGELES
CLIENT: DEPARTMENT OF RECREATION AND PARKS
GENERAL MANAGER: MICHAEL A. SHULL

SHEET TITLE: COMPOSITE UTILITY PLAN

PROJECT: STUDIO CITY GYMNASIUM

ADDRESS: 12621 RYE STREET, STUDIO CITY, CA 91604

WORK ORDER E170267B
PLAN FILE 860
DRAWING C400
SHEET 40 OF SHEETS 211

PLOTTED: 7/1/2019 11:34:04 AM

THE CITY OF LOS ANGELES OR ITS OFFICERS OR AGENTS SHALL NOT BE RESPONSIBLE FOR THE ACCURACY OR COMPLETENESS OF ELECTRONIC COPIES OF THIS PLAN SHEET.

FILE PATH: A360://Studio City Recreation Center/SCRC-Project Model_Central_Final.rvt

TTLB TEMPLATE REVISION DATE: 09/25/17
SHEET ISSUE

REVISION DATES (DESIGN STAGE ONLY)

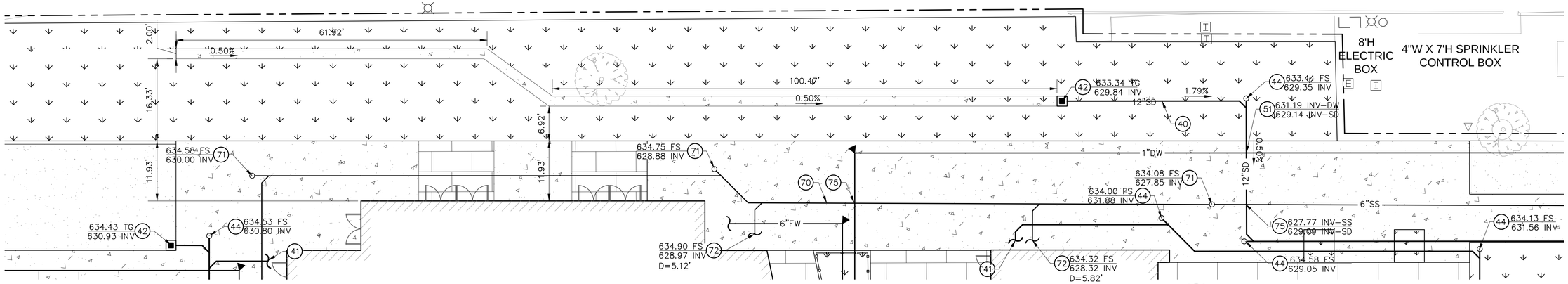

1 / C401 NORTH SIDE OF PROPOSED GYM ENLARGED SECTION

SCALE=1"=10'

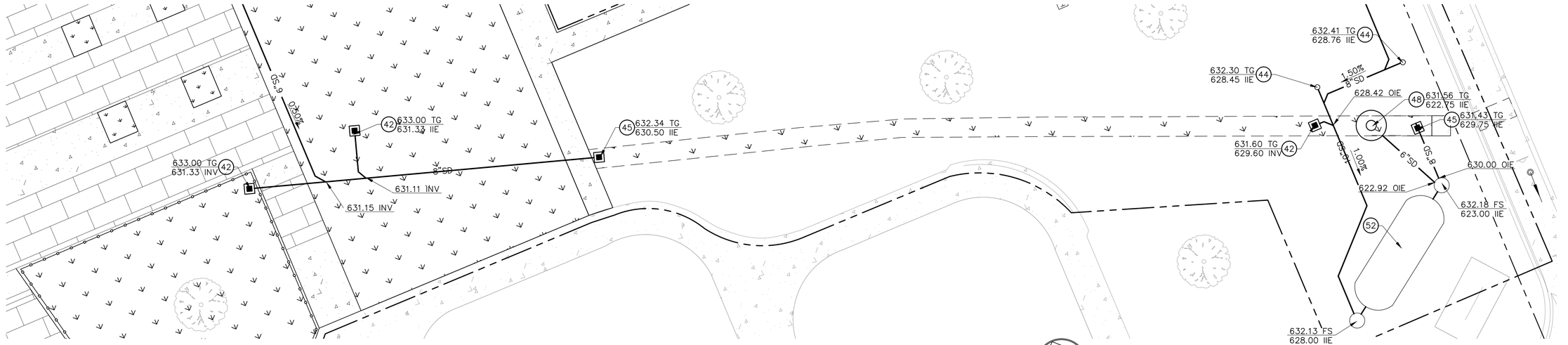

2 / C401 BIOSWALE ADJACENT TO BEEMAN AVE.

SCALE=1"=10'

CONSTRUCTION NOTES:

STORM DRAIN

(40) INSTALL SCH 80 STORM DRAIN PIPE. SEE PLAN FOR SIZES. FOR BEDDING DETAIL, SEE DETAIL 5 ON SHEET C500. PROVIDE ENCASEMENT IF COVER IS UNDER 18" OR USE CAST IRON PIPE.

(41) CONNECT TO BUILDING DOWNSPOUT. COORDINATE AND MATCH LOCATION WITH THE BUILDING PLUMBING AND ARCHITECTURAL DRAWINGS. PROVIDE REDUCING FITTINGS AS REQUIRED TO MATCH SIZE OF BUILDING LINE.

(42) CONSTRUCT 18"X18" CATCH BASIN PER DETAIL 2 ON SHEET C501. INSTALL STENCIL IN BLUE PAINT NEAR CATCH BASIN TO READ "NO DUMPING, DRAINS TO OCEAN" PER DETAIL 3 ON SHEET C501.

(43) INSTALL ADS DETENTION STRUCTURE PER DETAIL 1 ON SHEETS C504 AND C505.

(44) INSTALL STORM DRAIN CLEANOUT PER DETAIL 1 ON SHEET 502.

(45) BUBBLER CATCH BASIN PER DETAIL 4 ON SHEET C501. INSTALL STENCIL IN BLUE PAINT NEAR CATCH BASIN TO READ "NO DUMPING, DRAINS TO OCEAN" PER DETAIL 3 ON SHEET C501.

(46) INSTALL 12" PARKWAY DRAIN PER APWA S-151-2.

(47) TRENCH DRAIN PER DETAIL 4 ON SHEET C502.

(48) MAXWELL DRYWELL PER DETAIL 2 ON SHEET C505. COORDINATE WITH MANUFACTURER FOR INSTALLATION.

(49) EXISTING SWALE AREA.

(50) CONCRETE DESILTING AREA PER DETAIL 1 ON C501.

(51) AT CROSSING BETWEEN STORM DRAIN LINE AND WATER LINE, CONTRACTOR TO PROVIDE 12" MINIMUM CLEARANCE FROM INVERT OF WATER LINE TO TOP OF STORM DRAIN LINE.

(52) INSTALL ADS DETENTION STRUCTURE PER DETAIL 1 ON SHEET C504 AND C505.

(53) INSTALL 9" NDS CATCH BASIN MODEL 900GRKIT OR APPROVED EQUAL. INSTALL STENCIL IN BLUE PAINT NEAR CATCH BASIN TO READ "NO DUMPING, DRAINS TO OCEAN" PER DETAIL 3 ON SHEET C501.

SEWER

(70) INSTALL 6" ABS SEWER LINE.

(71) INSTALL SEWER CLEAN OUT PER DETAIL 1 ON SHEET C502.

(72) CONNECT TO BUILDING/SITE SEWER LINE. COORDINATE AND MATCH LOCATION WITH THE BUILDING PLUMBING DRAWINGS. PROVIDE REDUCING FITTING AS REQUIRED TO MATCH SIZE OF BUILDING SEWER.

(73) CONNECT TO EXISTING 8" SEWER MAIN LINE.

(74) INSTALL VCP SEWER LINE HOUSE CONNECTION FROM STREET MAIN SEWER LINE TO PROPERTY LINE PER CITY.

(75) AT CROSSING BETWEEN STORM DRAIN LINE OR WATER LINE AND SANITARY SEWER LINE, CONTRACTOR TO PROVIDE 12" MINIMUM CLEARANCE FROM INVERT OF DW OR SD LINE TO TOP OF SEWER PIPE.

BUREAU OF ENGINEERING
OFFICIAL RECORD

KEY MAP
SCALE: 1" = 400'

MCA ENGINEERS INC.
3411 S. Bentley Avenue, Suite 203, Alhambra, CA 91803
Tel: 323.939.6848 Fax: 323.735.6042

BUREAU OF ENGINEERING
CITY OF LOS ANGELES
DEPARTMENT OF PUBLIC WORKS

ENGINEERING
CITY OF LOS ANGELES

NO.	REVISION DESCRIPTION	DATE	BY

BUILDING NO. -

INDEX NO. RP-300106

PROFESSIONAL ENGINEER - CIVIL - STATE OF CALIFORNIA - No. C36079 - Exp. 6/30/20

CITY ENGINEER	DATE:
TED ALLEN, PE	1-24-2019
ARCHITECTURAL DIVISION	
ENGINEER: VIRGILIO ADANAN	LIC. NO.: C36079
DESIGNED BY: VIRGILIO ADANAN	1-24-2019
DRAWN BY: A.WAGGONER	1-24-2019
CHECKED BY: VIRGILIO ADANAN	1-24-2019
APPROVED BY:MAHMOOD KARIMZADEH, AIA, DEPUTY CITY ENGINEER	1-24-2019

CLIENT: DEPARTMENT OF RECREATION AND PARKS
GENERAL MANAGER: MICHAEL A. SHULL

SHEET TITLE: ENLARGED UTILITY PLAN

PROJECT: STUDIO CITY GYMNASIUM

ADDRESS: 12621 RYE STREET, STUDIO CITY, CA 91604

WORK ORDER E170267B

PLAN FILE 860

DRAWING C401

SHEET 41 OF SHEETS 211

PLOTTED: 7/1/2019 11:34:04 AM

THE CITY OF LOS ANGELES OR ITS OFFICERS OR AGENTS SHALL NOT BE RESPONSIBLE FOR THE ACCURACY OR COMPLETENESS OF ELECTRONIC COPIES OF THIS PLAN SHEET.

FILE PATH: A360://Studio City Recreation Center/SCRC-Project Model_Central_Final.rvt

TTLB TEMPLATE REVISION DATE: 09/25/17
SHEET ISSUE

REVISION DATES (DESIGN STAGE ONLY)

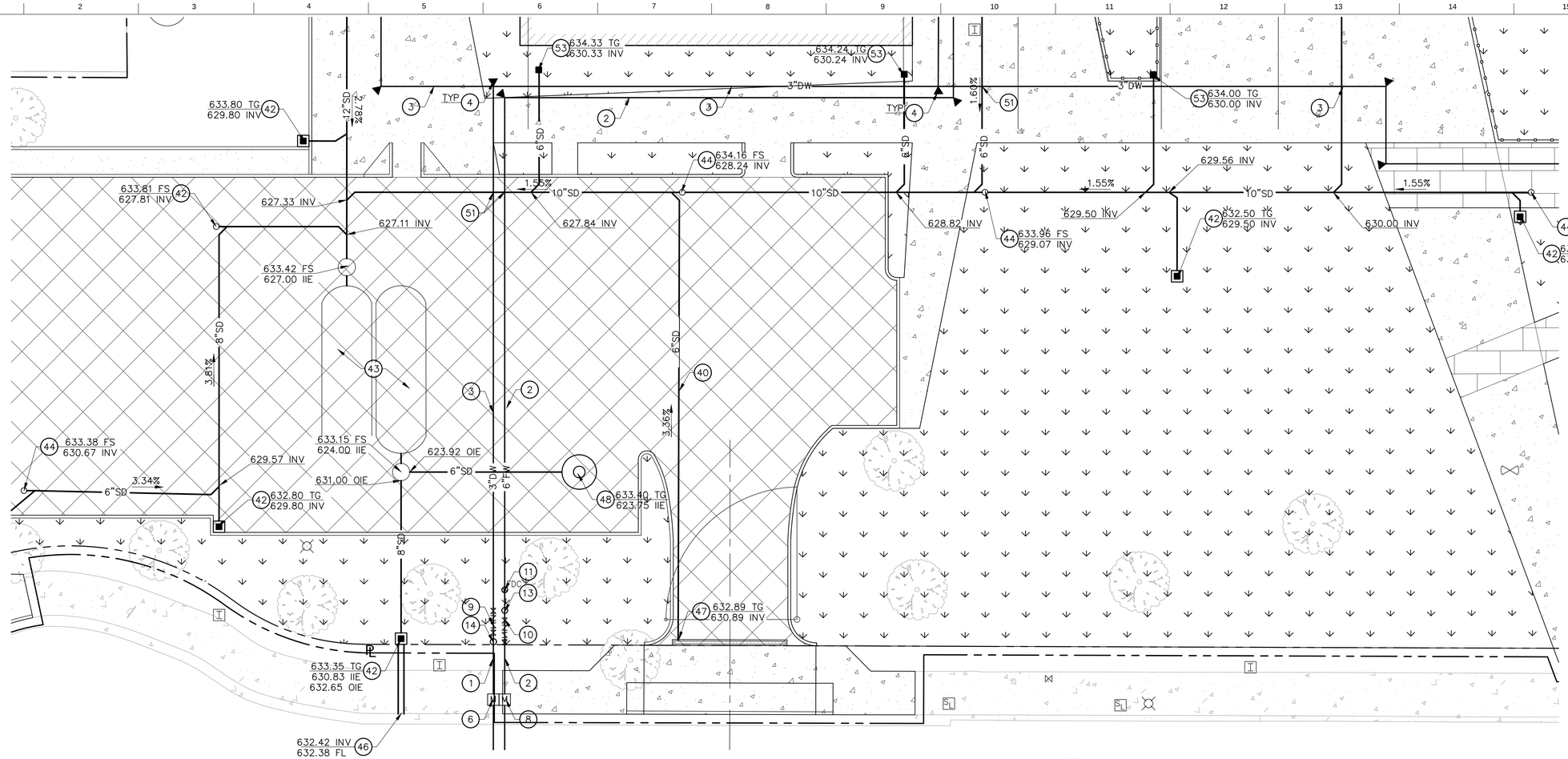

3 C402 WEST PARKING LOT ENLARGED SECTION

SCALE=1"=10'

WATER:

1. INSTALL 3"ø PIPE AWWA C900 DOMESTIC WATER LINE.PRESSURE CLASS 200 (DR14). FOR BEDDING DETAIL, SEE DETAIL 5 ON SHEET C500.
2. INSTALL 4"ø AWWA C900 FIRE WATER LINE. PRESSURE CLASS 200 (DR14). FOR BEDDING DETAIL, SEE DETAIL 5 ON SHEET C500.
3. POINT OF CONNECTION TO EXISTING WATER MAINLINE (FOR 3" ø DOMESTIC, 4"ø FOR FIRE WATER). COORDINATE WITH THE UTILITY PURVEYOR FOR CONNECTION REQUIREMENT, PERMIT AND FEES.
4. INSTALL THRUST BLOCK PER DETAIL 6 ON SHEET C500.
5. CONNECT TO BUILDING DOMESTIC WATER LINE. COORDINATE AND MATCH LOCATION WITH BUILDING PLUMBING.
6. 3"ø DOMESTIC WATER METER. COORDINATE WITH WATER PURVEYOR.
7. CONNECT TO BUILDING FIRE WATER LINE. COORDINATE AND MATCH LOCATION WITH BUILDING PLUMBING. PROVIDE REDUCER FITTINGS AS REQUIRED TO MATCH AND JOIN WITH BUILDING PLUMBING.
8. 4"ø FIREWATER CONNECTION VAULT/METER. COORDINATE WITH WATER PURVEYOR.
9. INSTALL 3"ø REDUCED PRESSURE BACKFLOW PREVENTER ASSEMBLY CLA-VAL MODEL RP-4, OR APPROVED EQUAL. COORDINATE WITH WATER PURVEYOR FOR AN APPROVED BACKFLOW DEVICE PRIOR ORDERING.
10. INSTALL 4" DOUBLE CHECK DETECTOR ASSEMBLY WATTS 350ADA OR APPROVED EQUAL. COORDINATE WITH WATER PURVEYOR FOR AN APPROVED BACKFLOW DEVICE PRIOR ORDERING.
11. FIRE DEPARTMENT CONNECTION PER DETAIL 4 ON SHEET C500.
12. CONNECT TO DRINKING WATER FOUNTAIN PER ARCHITECTURAL PLAN. PROVIDE REDUCER FITTINGS AS REQUIRED.
13. INSTALL PIV PER DETAIL 3 ON SHEET C503.
14. INSTALL GATE VALVE WITH YARD BOX.
15. INSTALL COPPER TUBING, TYPE L HARD FOR 1"ø PIPES SEE PLAN FOR LOCATION. PROVIDE PIPE EROSION PROTECTION. FOR BEDDING DETAIL, SEE DETAIL 5 ON SHEET C500.

STORM DRAIN

40. INSTALL SCH 80 STORM DRAIN PIPE. SEE PLAN FOR SIZES. FOR BEDDING DETAIL, SEE DETAIL 5 ON SHEET C500. PROVIDE ENCASEMENT IF COVER IS UNDER 18" OR USE CAST IRON PIPE.
41. CONNECT TO BUILDING DOWNSPOUT. COORDINATE AND MATCH LOCATION WITH THE BUILDING PLUMBING AND ARCHITECTURAL DRAWINGS. PROVIDE REDUCING FITTINGS AS REQUIRED TO MATCH SIZE OF BUILDING LINE.
42. CONSTRUCT 18"X18" CATCH BASIN PER DETAIL 2 ON SHEET C501. INSTALL STENCIL IN BLUE PAINT NEAR CATCH BASIN TO READ "NO DUMPING, DRAINS TO OCEAN" PER DETAIL 3 ON SHEET C501.
43. INSTALL ADS DETENTION STRUCTURE PER DETAIL 1 ON SHEETS C504 AND C505.
44. INSTALL STORM DRAIN CLEANOUT PER DETAIL 1 ON SHEET 502.
45. BUBBLER CATCH BASIN PER DETAIL 4 ON SHEET C501. INSTALL STENCIL IN BLUE PAINT NEAR CATCH BASIN TO READ "NO DUMPING, DRAINS TO OCEAN" PER DETAIL 3 ON SHEET C501.
46. INSTALL 12" PARKWAY DRAIN PER APWA S-151-2.
47. TRENCH DRAIN PER DETAIL 4 ON SHEET C502.
48. MAXWELL DRYWELL PER DETAIL 2 ON SHEET C505. COORDINATE WITH MANUFACTURER FOR INSTALLATION.
49. EXISTING SWALE AREA.
50. CONCRETE DESILTING AREA PER DETAIL 1 ON C501.
51. AT CROSSING BETWEEN STORM DRAIN LINE AND WATER LINE, CONTRACTOR TO PROVIDE 12" MINIMUM CLEARANCE FROM INVERT OF WATER LINE TO TOP OF STORM DRAIN LINE.
52. INSTALL ADS DETENTION STRUCTURE PER DETAIL 1 ON SHEET C504 AND C505.
53. INSTALL 9" NDS CATCH BASIN MODEL 900GRKIT OR APPROVED EQUAL. INSTALL STENCIL IN BLUE PAINT NEAR CATCH BASIN TO READ "NO DUMPING, DRAINS TO OCEAN" PER DETAIL 3 ON SHEET C501.

ENLARGED GRADING PLAN

20 10 0 20 40

SCALE: 1" = 20'

KEY MAP

SCALE: 1" = 400'

BUREAU OF ENGINEERING
OFFICIAL RECORD

THE CITY OF LOS ANGELES OFFICERS OR AGENTS SHALL NOT BE RESPONSIBLE FOR THE ACCURACY OR COMPLETENESS OF ELECTRONIC COPIES OF THIS PLAN SHEET.

FILE PATH: A360://Studio City Recreation Center/SCRC-Project Model_Central_Final.rvt

TTLB TEMPLATE REVISION DATE: 09/25/17
SHEET ISSUE

REVISION DATES (DESIGN STAGE ONLY)

BUREAU OF ENGINEERING
CITY OF LOS ANGELES
DEPARTMENT OF PUBLIC WORKS

NO.	REVISION DESCRIPTION	DATE	BY

BUILDING NO. -

INDEX NO. RP-300106

PROFESSIONAL ENGINEER — CIVIL — No. C36079 Exp. 6/30/20 — STATE OF CALIFORNIA

CITY ENGINEER	DATE:
TED ALLEN, PE	
ARCHITECTURAL DIVISION	1-24-2019
LIC. NO.: C36079	1-24-2019
ENGINEER: VIRGILIO AOANAN	1-24-2019
DESIGNED BY: VIRGILIO AOANAN	1-24-2019
DRAWN BY: A.WAGGONER	1-24-2019
CHECKED BY: VIRGILIO AOANAN	1-24-2019
APPROVED BY:MAHMOOD KARIMZADEH, AIA, DEPUTY CITY ENGINEER	1-24-2019

CLIENT: DEPARTMENT OF RECREATION AND PARKS
GENERAL MANAGER: MICHAEL A. SHULL

SHEET TITLE: ENLARGED UTILITY PLAN

PROJECT: STUDIO CITY GYMNASIUM

ADDRESS: 12621 RYE STREET, STUDIO CITY, CA 91604

MCA ENGINEERS, INC. — 2411 E. Katella Avenue, Suite 210, Anaheim, CA 92806 — Tel: 323.728.5588 Fax: 323.728.5543

WORK ORDER E170267B
PLAN FILE 860
DRAWING C402
SHEET 42 OF SHEETS 211

PLOTTED: 7/1/2019 11:34:04 AM

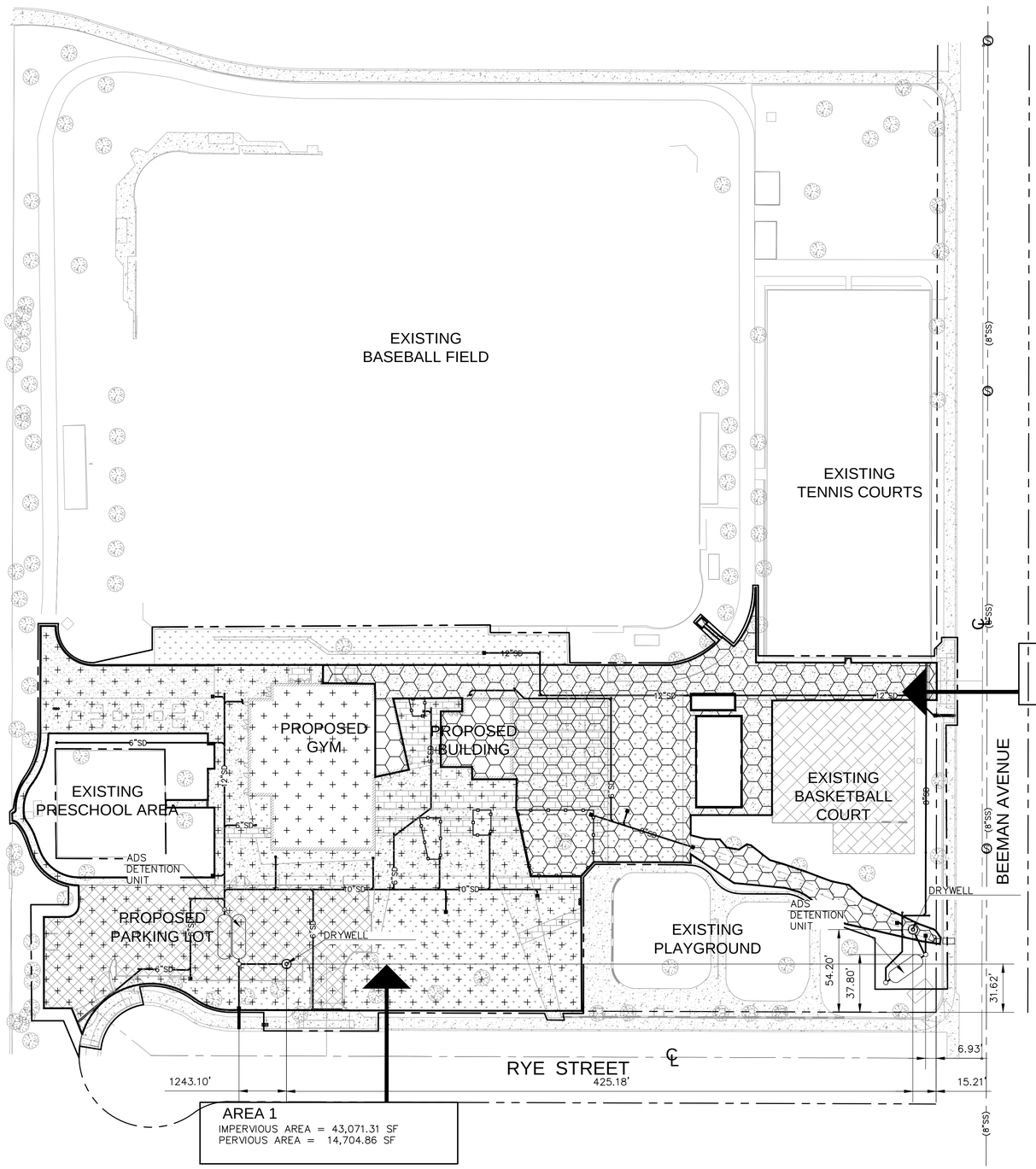

LID SUMMARY TABLE

AREA	HARDSCAPE AND ROOF AREA (ACRE)	V_M	BMP	VOLUME REQUIRED(CF)	VOLUME PROVIDED (CF)
1	0.99	3,856	3,123 CF ADS DETENTION UNIT AND 905 CF DRYWELL	3,856	4,028
2	0.53	2,028	1,522 CF ADS DETENTION UNIT AND 905 DRYWELL	2,028	2,427
TOTAL	1.52	5,884	4,564 CF ADS DETENTION UNIT AND (2) 6'ø 45' DEEP DRYWELL	5,884	6,455

NOTES:

ANY CHANGES (TYPE, SIZE, LOCATION) TO APPROVED STORMWATER BEST MANAGEMENT PRACTICE(S) (BMPS) MUST OBTAIN WRITTEN APPROVAL FROM LOS ANGELES DEPARTMENT OF PUBLIC WORKS, BUREAU OF SANITATION PRIOR TO CONSTRUCTION OF BMP(S).

LID PLAN

30 15 0 30 60

SCALE: 1" = 30'

KEY MAP

SCALE: 1" = 400'

BUREAU OF ENGINEERING
OFFICIAL RECORD

DEPARTMENT OF PUBLIC WORKS
CITY OF LOS ANGELES
BUREAU OF ENGINEERING
ENGINEERING
CITY OF LOS ANGELES

NO.	REVISION DESCRIPTION	DATE	BY

INDEX NO. RP-300106
BUILDING NO. -

PROFESSIONAL ENGINEER — REGISTERED CIVIL ENGINEER — STATE OF CALIFORNIA — No. C36079 Exp. 6/30/20 CIVIL

CITY ENGINEER	DATE:
TED ALLEN, PE	1-24-2019
ARCHITECTURAL DIVISION	1-24-2019
ENGINEER: VIRGILIO AOANAN LIC. NO.: C36079	1-24-2019
DESIGNED BY: VIRGILIO AOANAN	1-24-2019
DRAWN BY: A.WAGGONER	1-24-2019
CHECKED BY: VIRGILIO AOANAN	1-24-2019
APPROVED BY:MAHMOOD KARIMZADEH, AIA, DEPUTY CITY ENGINEER	1-24-2019

CLIENT: DEPARTMENT OF RECREATION AND PARKS
GENERAL MANAGER: MICHAEL A. SHULL

SHEET TITLE: LID PLAN

PROJECT: STUDIO CITY GYMNASIUM

ADDRESS: 12621 RYE STREET, STUDIO CITY, CA 91604

MCA ENGINEERS, INC.

2101 E. Katella Avenue, Suite 220, Anaheim, CA 92806
Tel: 323.278.9588 Fax: 323.278.9427

WORK ORDER E170267B
PLAN FILE 860
DRAWING C403
SHEET 43 OF SHEETS 211

PLOTTED: 7/1/2019 11:34:04 AM

THE CITY OF LOS ANGELES OR ITS OFFICERS OR AGENTS SHALL NOT BE RESPONSIBLE FOR THE ACCURACY OR COMPLETENESS OF ELECTRONIC COPIES OF THIS PLAN SHEET.

FILE PATH: A360://Studio City Recreation Center/SCRC-Project Model_Central_Final.rvt

TTLB TEMPLATE REVISION DATE: 09/25/17
SHEET ISSUE

REVISION DATES (DESIGN STAGE ONLY)

1 CONCRETE PAVEMENT SECTION
NOT TO SCALE

NOTES:

1. CONCRETE, fc'=4000 psi @ 28 DAYS, FOR TRAFFIC ONLY.
2. REBARS, fy=60,000 psi ASTM A615.
3. FOR CONSTRUCTION AND EXPANSION JOINTS REFER TO DETAILS 2 AND 3 ON SHEET C502
4. FOR PAVING FINISHES, COLOR INTEGRATION, REFER LANDSCAPE DRAWINGS
5. CONCRETE, fc'=3,000 PSI @ 28 DAYS, FOR NON TRAFFIC.
6. CRACK CONTROL JOINTS SHOULD BE SPACED @ INTERVALS NOT GREATER THAN 10' USING SAWCUTS AND EXTEND MINIMUM OF 1/4 THE SLAB THICKNESS.
7. FOR FINISH SURFACES, COLOR INTEGRATION, EXPANSION JOINTS AND OTHER PAVEMENT SURFACE FEATURES, SEE LANDSCAPE DRAWINGS.

LOCATION	CONCRETE PAVEMENT	TYPE OF BASE
	THICKNESS "A"	THICKNESS "B"
TRAFFIC	6"	8" CRUSHED AGGREGATE BASE
NON TRAFFIC	5"	5" CRUSHED AGGREGATE BASE

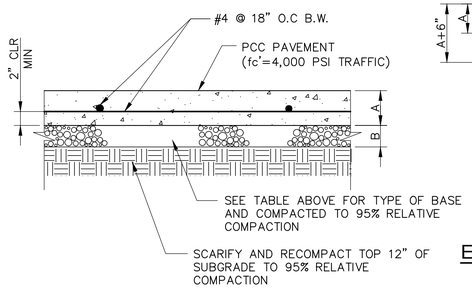

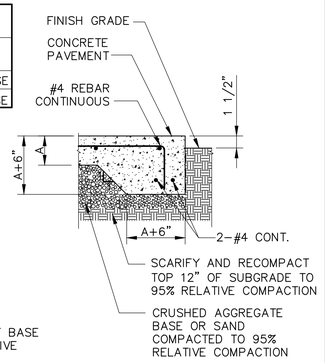

EDGE OF RIGID PAVEMENT

2 ASPHALT PAVEMENT SECTION
NOT TO SCALE

LOCATION	ASPHALT CONCRETE		BASE COURSE		
	THICKNESS	CLASS	THICKNESS	TYPE	GRADE
TRAFFIC AREA	3.5"	C2	6"	CAB	FINE

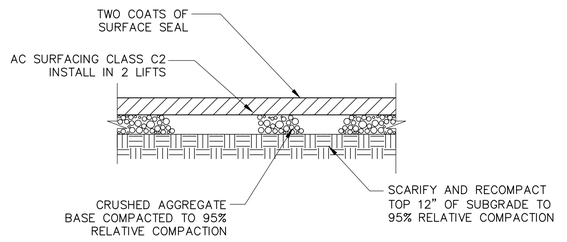

3 CONCRETE CURB DETAIL
NOT TO SCALE

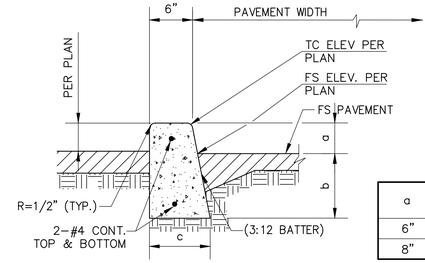

a	b	c
6"	8"	9-1/2"
8"	8"	11"

NOTES:

1. PROVIDE 1/4" EXPANSION JOINT WITH PREFORMED JOINT FILLER AT ALL ANGLE POINTS AND THE BEGINNING AND END OF ALL CURVES.
2. PROVIDE CONTRACTION JOINTS CONSISTING OF ONE INCH DEEP CUT SCORES AT 10' O.C. MAX.
3. WHERE A WALK IS ADJACENT TO THE CURB, THE JOINTS SHALL LINE WITH JOINTS IN THE WALK.

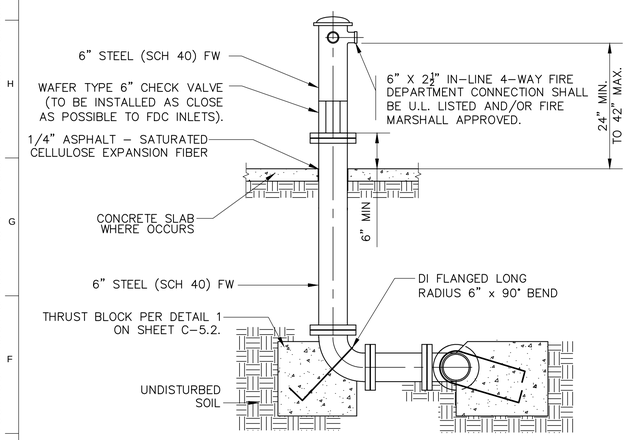

NOTES:

1. THE FDC SHALL BE VISIBLE, ACCESSIBLE (THREE FEET CLEAR ABOVE AND ON BOTH SIDES) AND INSTALLED WITH THE INLETS NOT LESS THAN 24 INCHES AND NOT MORE THAN 42 INCHES ABOVE THE LEVEL OF GRADE, WITH THE FDC FACING THE STREET. WHEN A FENCE OR OTHER OBSTRUCTION IS PROVIDED, THE FDC SHALL BE ACESSIBLE FROM THE PUBLIC SIDE OF THE OBSTRUCTION. LACoFD REGULATION 7.
2. CLASS I STANDPIPE SYSTEMS SHALL BE EQUIPPED WITH A LISTED 4-WAY FDC, CLAPPERED BODY FDC, HAVING FOUR 2 1/2" INLETS SIAMESES INTO A MINIMUM 6" PIPE WITH A 6" CHECK VALVE. (CHECK VALVE HAS TO BE INSTALLED AS CLOSE AS POSSIBLE TO THE FDC).
3. FIRE DEPARTMENT CONNECTION SHALL BE PAINTED RED ON ANY EXPOSED SURFACES SUBJECT TO RUST OR CORROSION. COUPLING THREADS, OPERATION MECHANISMS, ANY COMPONENTS OR PORTION OF THE VALVE WHERE THE APPLICATION OF PAINT WOULD VIOLATE THE LISTING OR HINDER ITS OPERATION SHALL NOT BE PAINTED. 2011 FC, SECTION 912.7.
4. FDCs SHALL HAVE A PERMANENT SIGN IDENTIFYING AREAS OR SYSTEMS CONTROLLED. SIGNS SHALL BE METAL, PAINTED WHITE WITH MINIMUM RED LETTERS 1" HIGH WITH 3/16" STROKE AND SHALL BE PERMANENTLY BANDED TO THE VALVE OR PERMANENTLY AFFIXED TO A WALL. INDICATE THE TYPE OF SYSTEM, ADDRESS, AND BUILDINGS SERVED BY THE FDC, AND SYSTEM PUMPING PRESSURE (IF OVER 150 PSI). SIGNS SHALL BE PROVIDED AS OUTLINED IN LACoFD REGULATION 7 AND 2011 FIRE CODE, SECTION 912.4.

4 FIRE DEPARTMENT CONNECTION
NOT TO SCALE

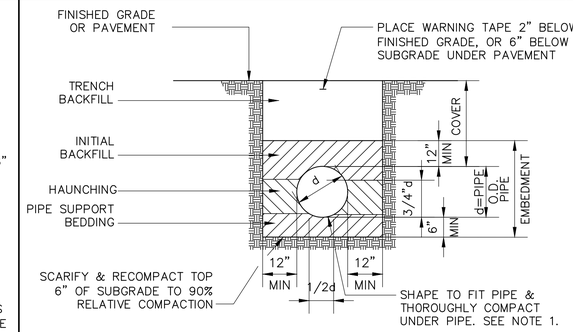

BEDDING CLEAN COARSE SAND EQUIVALENT (SE) OF 30 OR GREATER.
*INITIAL BACKFILL APPROVED GRANULAR SOIL MATERIAL - MAXIMUM SIZE NOT TO EXCEED 8" TRENCH BACKFILL APPROVED GRANULAR SOIL MATERIAL 90% COMPACTION

*BACKFILL BEDDING MATERIAL SHOULD BE EXTENT 12" ABOVE THE PIPE.

LOAD CONDITION	COVER	BEDDING MATERIAL
NON-TRAFFIC/TRAFFIC	1.0' MIN TO 3.0'	APPROVED GRANULAR SOIL MATERIAL-MAX SIZE NOT TO EXCEED 1/2", EXCEPT WHERE NOTED.
NON-TRAFFIC	5.1' TO 18.0'	CLEAN COARSE SAND
TRAFFIC	3.0' MIN TO 18.0'	CLEAN COARSE SAND

CLEAN COURSE SAND: SHALL CONFORM TO THE REQUIREMENTS OF SAND FOR PORTLAND CEMENT CONCRETE AS SPECIFIED IN SECTION 200-1.5.5 OF THE STANDARD SPECIFICATIONS FOR PUBLIC WORKS CONSTRUCTION, LATEST EDITION.

NATIVE MATERIAL: UP TO CLASS IV SOILS, TYPE ML, CL, FINE GRAINED, LL < 50, MEDIUM TO NO PLASTICITY TO NO PLASTICITY

* NOTE: FOR CLASS IV SOIL, TYPE MH OR ALL CLASS V SOILS, USE CLEAN COARSE SAND.

COMPACTION: PIPE EMBEDMENT AND TRENCH BACKFILL SHALL BE COMPACTED IN ACCORDANCE WITH SECTION 306-1.3 OF THE STANDARD SPECIFICATIONS FOR PUBLIC WORKS CONSTRUCTION, LATEST EDITION. WATER DENSIFIED BACKFILL SHALL NOT BE USED UNLESS APPROVED BY THE SOILS ENGINEER.

NOTES:

1. EXCAVATE FOR BELLS OR HUBS SO FULL LOAD IS CARRIED BY PIPE BARREL
2. HAUNCHING MATERIAL SHALL BE PLACED IN A MANNER SUCH AS SLICING SHOVEL-SPADING OR SHOVEL RODDING TO INSURE COMPLETE FILLING OF THE "HAUNCH AREAS" BELOW THE PIPE. (JETTING OF SAND MATERIAL IS NOT REQUIRED).

5 BEDDING DETAIL
NOT TO SCALE

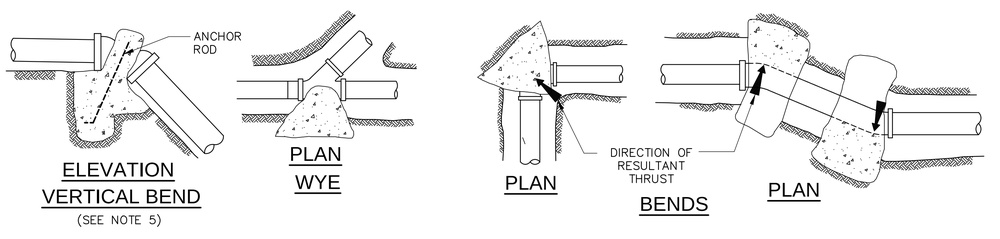

TABLE II

SOIL TYPE	MAX. ALLOWABLE SOIL BEARING VALUES	FACTORS FOR INCREASING AREAS IN TABLE 1
LOOSE SAND	500 PSF	4
SOFT SANDY CLAY	1000 PSF	2
ADOBE	1000 PSF	2
COMPACT FINE SAND	2000 PSF	1
COMPACT COARSE SAND	2000 PSF	1
MEDIUM STIFF CLAY	2000 PSF	1

THE CONTRACTOR SHALL BE RESPONSIBLE FOR DETERMINING THE SAFE SOIL BEARING VALUES AND SIZE OF BEARING AREAS.
BASED ON 2 FEET MINIMUM DEPTH OF COVER OVER THE PIPE.

TABLE 1

MINIMUM BEARING AREAS IN SQ.FT.				
MAIN SIZE	TEE	90° BEND	45° BEND	22 1/2 BEND
6"	4	4	4	3
8"	5	7	4	3
10"	9	12	6	4
12"	12	16	9	

BASED ON 200 PSI W.W.R. PRESSURE & SOIL BEARING LOADS OF 1500 PSF THE RATIO OF WIDTH TO HEIGHT SHALL NOT EXCEED 1 1/2 TO 1 TEES,PLUGS,CAPS & HYDRANTS.

NOTES:

1. ALL ANCHOR AND THRUST BLOCKS SHALL BEAR AGAINST UNDISTURBED SOIL.
2. MINIMUM ALLOWABLE WATER PRESSURE FOR DESIGN OF THRUST BLOCKS IS 150 PSI. BEARING AREA INCREASE IN PRESSURE.
3. ALL CONCRETE USED IN THRUST BLOCKS SHALL ATTAIN 2000 PSI STRENGTH.
4. ALL ANCHOR RODS SHALL BE REINFORCING STEEL AND A MINIMUM OF 1/2-INCH IN DIAMETER.
5. USE ANCHOR BLOCKS AT VERTICAL BENDS WHEN PIPE IS ABOVE OR BELOW GROUND. SIZE OF BLOCK AND ROD SHALL BE AS SHOWN ON THE PLANS OR AS DETERMINED BY THE ENGINEER IN THE FIELD.
6. USE 30 POUND FELT TO INSURE COLD JOINT.
7. CONCRETE SHALL NOT COME INTO DIRECT WITH ASBESTOS CEMENT PIPE.
8. FOR PIPE 14" IN DIAMETER OR LARGER ENGINEER IS TO SUBMIT CALCULATIONS.

6 TYPICAL THRUST BLOCK INSTALLATION
NOT TO SCALE

BUREAU OF ENGINEERING OFFICIAL RECORD

MCA ENGINEERS, INC. 2815 S. Grand Avenue, Suite 200, Los Angeles, CA 90007 Tel: 323.735.0048 Fax: 323.735.0043

BUREAU OF ENGINEERING
CITY OF LOS ANGELES
ENGINEERING

NO.	REVISION DESCRIPTION	DATE	BY

BUILDING NO. -
INDEX NO. RP-300106

PROFESSIONAL ENGINEER - CIVIL - STATE OF CALIFORNIA - No. C36079 - Exp. 6/30/20

DEPARTMENT OF PUBLIC WORKS
CITY OF LOS ANGELES

CITY ENGINEER	DATE:	CITY ENGINEER	DATE:
TED ALLEN, PE	1-24-2019		1-24-2019
ARCHITECTURAL DIVISION	LIC. NO.: C36079		1-24-2019
ENGINEER: VIRGILIO AOANAN			1-24-2019
DESIGNED BY: VIRGILIO AOANAN			1-24-2019
DRAWN BY: A.WAGGONER			1-24-2019
CHECKED BY: VIRGILIO AOANAN			1-24-2019
APPROVED BY:MAHMOOD KARIMZADEH, AIA, DEPUTY CITY ENGINEER			

CLIENT: DEPARTMENT OF RECREATION AND PARKS
GENERAL MANAGER: MICHAEL A. SHULL

SHEET TITLE: MISCELLANEOUS DETAILS

PROJECT: STUDIO CITY GYMNASIUM

ADDRESS: 12621 RYE STREET, STUDIO CITY, CA 91604

WORK ORDER E170267B
PLAN FILE 860
DRAWING C500
SHEET 44 OF SHEETS 211

PLOTTED: 7/1/2019 11:34:04 AM

THE CITY OF LOS ANGELES OR ITS OFFICERS OR AGENTS SHALL NOT BE RESPONSIBLE FOR THE ACCURACY OR COMPLETENESS OF ELECTRONIC COPIES OF THIS PLAN SHEET.

FILE PATH: A360://Studio City Recreation Center/SCRC-Project Model_Central_Final.rvt

TTLB TEMPLATE REVISION DATE: 09/25/17
SHEET ISSUE

REVISION DATES (DESIGN STAGE ONLY)

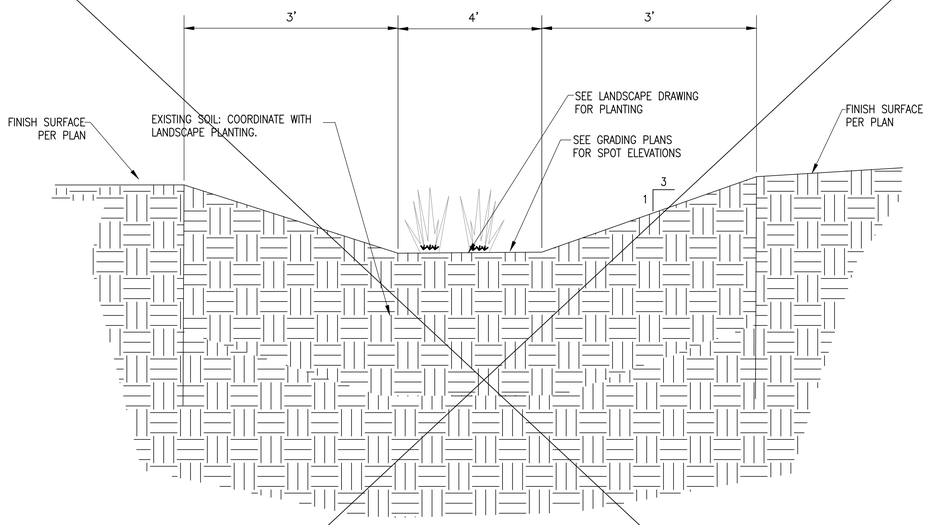

NOTES:

1. FOR PLANTING, SOIL AND LANDSCAPING REQUIREMENTS –SEE LANDSCAPE DRAWINGS.
2. FOR PLANTER AND OUTLET DRAINAGE LINES AND DRAINAGE STRUCTURES – SEE CIVIL DRAWINGS.
3. COORDINATE PLANTING DETAILS AND FEATURES WITH ARCHITECTURAL, LANDSCAPE, STRUCTURAL AND CIVIL DRAWINGS.

1 SWALE DETAIL
NOT TO SCALE

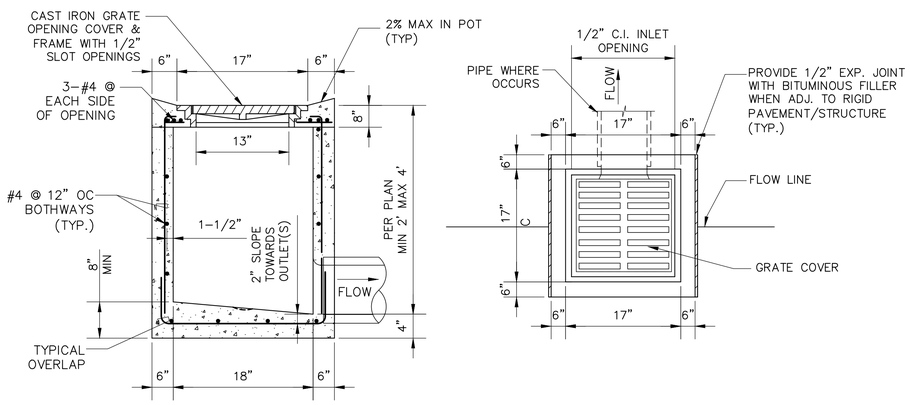

SECTION

PLAN

NOTES:

1. USE 3/4" DIA. PIPE BAR SPACERS ASSEMBLED ON (2) 1/2" DIA. RODS WITH THREADS AND NUTS AT BOTH ENDS.
2. CONCRETE, FC'=3,500 PSI @ 28 DAYS PER SSPWC.
3. ALL METAL PARTS SHALL BE GALVANIZED AFTER FABRICATION AND WELDING, AND BEFORE ASSEMBLING.
4. FRAME AND GRATE SHALL BE SIMILAR TO ALHAMBRA FOUNDRY CO. LTD. SERIES MODEL NO. 1583 OR BROOKS PRODUCTS, INC. OR APPROVED EQUAL.
5. GRATES MUST COMPLY WITH ALL A.D.A. REQUIREMENTS. GRATES SHALL BE OF VANDAL–RESISTANT CONSTRUCTION WITH ½"MAX OPENINGS.
6. FRAME AND GRATE SHALL BE TRAFFIC–RATED WHEN INSTALLED IN PAVED (ASPHALT OR CONCRETE) AREAS. GRATES SHALL BE IN THE DIRECTION OF TRAFFIC FLOW.
7. PROVIDE LABEL "WITH NO DUMPING – DRAINS TO OCEAN" AT ALL DRAINAGE INLETS (I.E. CATCH BASINS, TRENCH DRAINS) PER DETAIL 3 ON THIS SHEET.

2 CATCH BASIN
NOT TO SCALE

NOTES:

1. PROVIDE 8" MIN DIAMETER FOR STENCIL.
2. STENCIL IN BLUE PAINT NEAR ALL CATCH BASIN DRAINS TO READ "NO DUMPING, DRAINS TO OCEAN".
3. STENCILS MAY BE PURCHASED AT THE LOCAL COUNTY BUILDING AND SAFETY OFFICE AT 626–458–6390.

3 NO DUMPING STENCIL
NOT TO SCALE

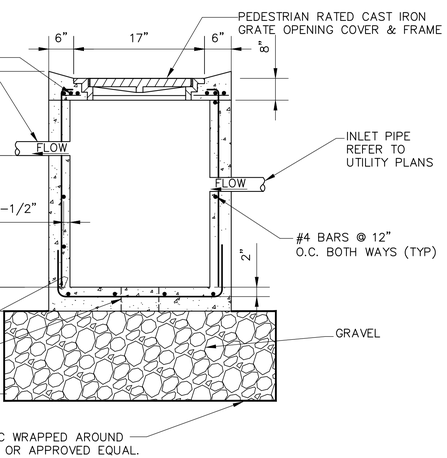

NOTES:

1. USE 3/4" DIA. PIPE BAR SPACERS ASSEMBLED ON (2) 1/2" DIA. RODS WITH THREADS AND NUTS AT BOTH ENDS.
2. CONCRETE, FC'=3,500 PSI @ 28 DAYS PER SSPWC.
3. ALL METAL PARTS SHALL BE GALVANIZED AFTER FABRICATION AND WELDING, AND BEFORE ASSEMBLING.
4. FRAME AND GRATE SHALL BE SIMILAR TO ALHAMBRA FOUNDRY CO. LTD. SERIES MODEL NO. 1583 OR BROOKS PRODUCTS, INC. OR APPROVED EQUAL.
5. GRATES MUST COMPLY WITH ALL A.D.A. REQUIREMENTS. GRATES SHALL BE OF VANDAL–RESISTANT CONSTRUCTION WITH ½"MAX OPENINGS.
6. FRAME AND GRATE SHALL BE TRAFFIC–RATED WHEN INSTALLED IN PAVED (ASPHALT OR CONCRETE) AREAS. GRATES SHALL BE IN THE DIRECTION OF TRAFFIC FLOW.
7. PROVIDE LABEL "WITH NO DUMPING – DRAINS TO OCEAN" AT ALL DRAINAGE INLETS (I.E. CATCH BASINS, TRENCH DRAINS) PER DETAIL 3 ON THIS SHEET.

4 BUBBLER CATCH BASIN
NOT TO SCALE

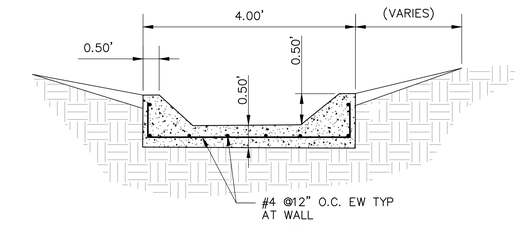

SECTION A

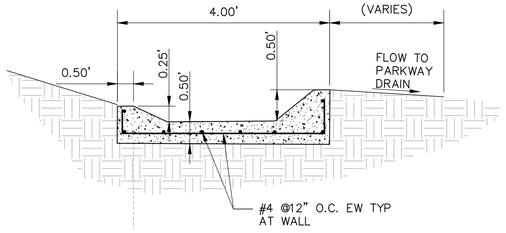

SECTION B

5 DESILTING AREA
NOT TO SCALE

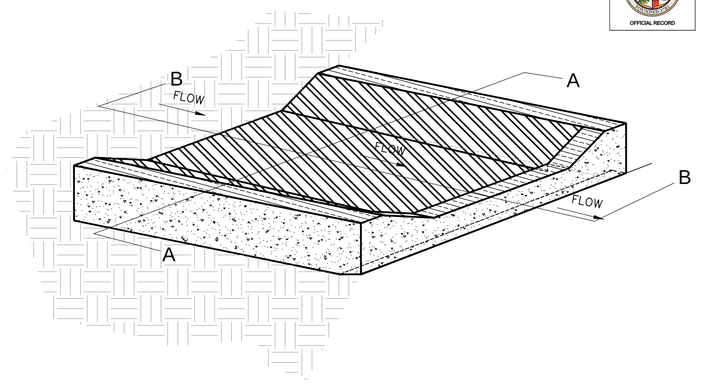

NOTES:

1. CONCRETE, fc'=4000 psi @ 28 DAYS
2. REBARS, fy=60,000 psi ASTM A615.
3. FOR CONSTRUCTION AND EXPANSION JOINTS REFER TO DETAILS 2 AND 3 ON SHEET C502
4. PROVIDE 1" CHAMFER AT EDGES OF EXPOSED CONCRETE SURFACES.
5. SCARIFY AND RECOMPACT TOP 12" OF SUBGRADE TO 95% RELATIVE COMPACTION BELOW SLAB.

BUREAU OF ENGINEERING
OFFICIAL RECORD

DEPARTMENT OF PUBLIC WORKS
BUREAU OF ENGINEERING
CITY OF LOS ANGELES
ENGINEERING

NO.	REVISION DESCRIPTION	DATE	BY

BUILDING NO. -

INDEX NO. RP-300106

PROFESSIONAL ENGINEER – CIVIL – STATE OF CALIFORNIA – No. C36079 – Exp. 6/30/20

	NAME	DATE:
CITY ENGINEER		
ARCHITECTURAL DIVISION		1-24-2019
LIC. NO.: C36079		1-24-2019
ENGINEER: VIRGILIO ADANAN		1-24-2019
DESIGNED BY: VIRGILIO ADANAN		1-24-2019
DRAWN BY: A.WAGGONER		1-24-2019
CHECKED BY: VIRGILIO ADANAN		1-24-2019
APPROVED BY:MAHMOOD KARIMZADEH, AIA, DEPUTY CITY ENGINEER		1-24-2019

TED ALLEN, PE

CLIENT: DEPARTMENT OF RECREATION AND PARKS
GENERAL MANAGER: MICHAEL A. SHULL

SHEET TITLE: MISCELLANEOUS DETAILS
PROJECT: STUDIO CITY GYMNASIUM
ADDRESS: 12621 RYE STREET, STUDIO CITY, CA 91604

MCA ENGINEERS INC
3141 S. Bristol Avenue, Suite 250, Alhambra, CA 91803
Tel: 323.725.5588 Fax: 323.726.8422

WORK ORDER E170267B
PLAN FILE 860
DRAWING C501
SHEET 45 OF SHEETS 211

PLOTTED: 7/1/2019 11:34:04 AM

THE CITY OF LOS ANGELES OR ITS OFFICERS OR AGENTS SHALL NOT BE RESPONSIBLE FOR THE ACCURACY OR COMPLETENESS OF ELECTRONIC COPIES OF THIS PLAN SHEET.

FILE PATH: A360://Studio City Recreation Center/SCRC-Project Model_Central_Final.rvt

TTLB TEMPLATE REVISION DATE: 09/25/17
SHEET ISSUE

REVISION DATES: (DESIGN STAGE ONLY)

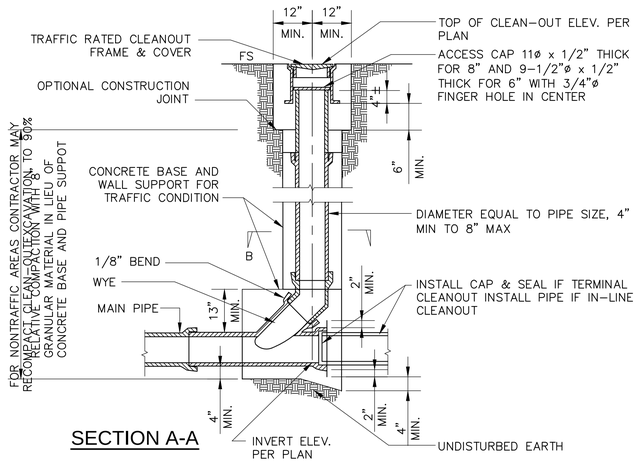

SECTION A-A

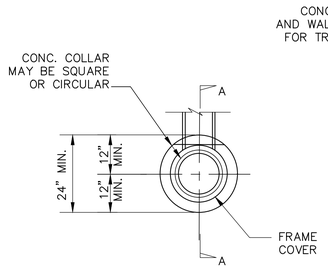

PLAN

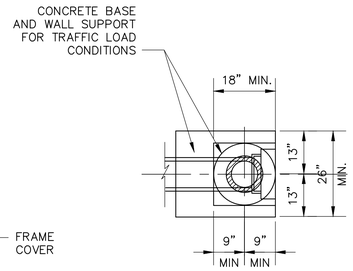

SECTION B-B

NOTES:

1. FOR STORM DRAINAGE CLEAN OUT COVER, PROVIDE COVER WITH INSCRIPTION "D" TO DENOTE STORM DRAINAGE
2. FOR SANITARY SEWER CLEAN OUT COVER, PROVIDE COVER WITH INSCRIPTION "S" TO DENOTE SANITARY SEWER.

1 SEWER CLEAN OUT DETAIL
NOT TO SCALE

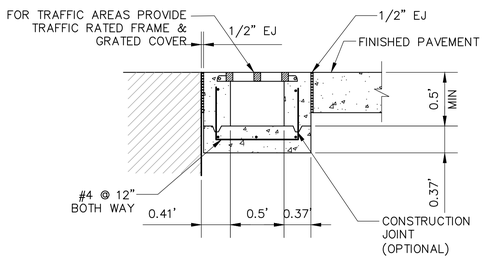

NOTES:

1. THE SLOPE IN THE TRENCH DRAIN SHALL BE 1% MINIMUM
2. FOR THE ELEVATION OF THE CONCRETE SEE DRAWING.
3. FOR LOCATION OF DISCHARGE PIPE, SEE DRAWING.
4. GRATE SHALL BE A.D.A. COMPLIANT, HEEL PROOF, AND VANDAL RESISTANT
5. PROVIDE LABEL "WITH NO DUMPING – DRAINS TO OCEAN" AT ALL DRAINAGE INLETS (I.E. CATCH BASINS, TRENCH DRAINS).

4 TRENCH DRAIN
NOT TO SCALE

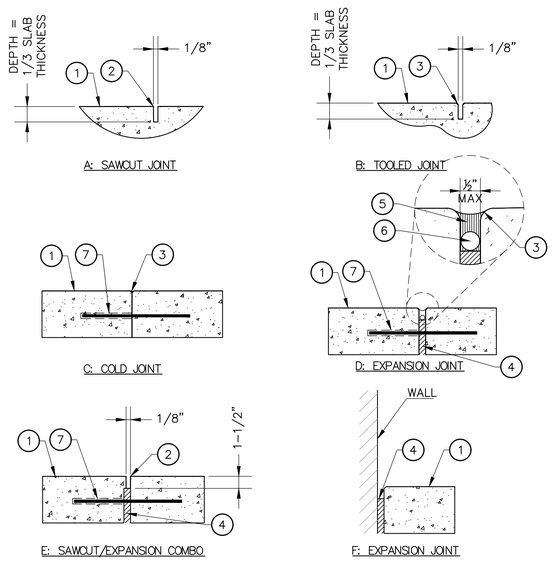

LEGEND

1. PAVING FINISH SURFACE.
2. SAWCUT.
3. 1/4" R. @ EDGES. TYP.
4. PREMOLDED E.J. FILLER.
5. JOINT SEALANT. COLOR TO BE SELECTED BY LANDSCAPE ARCHITECT. SUBMIT COLOR SAMPLES PRIOR TO INSTALLATION.
6. BACKER ROD.
7. 18" #4 REBAR W/ 'SPEED DOWEL' @ 36" OC, CENTER IN CONC. AT COLD JOINTS & E.J.'S
8. CONTROL JOINTS 10 O.C MAX.
9. CONTRACTOR TO SUBMIT SHOP DRAWINGS OF CONTROL JOINT AND EXPANSION JOIN LAYOUT.

2 JOINT DETAIL
NOT TO SCALE

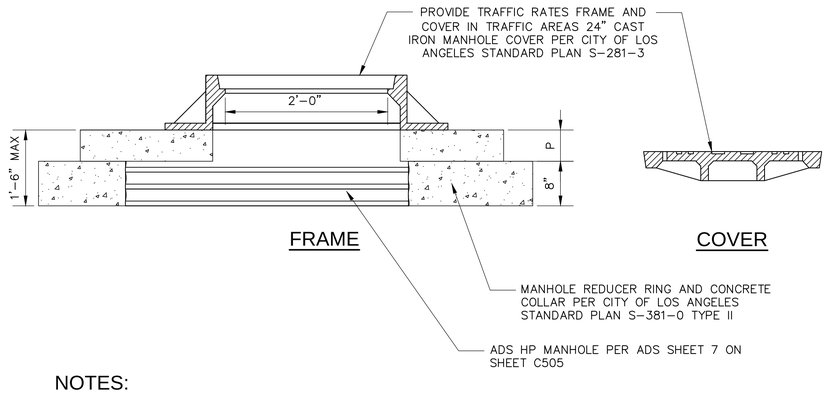

NOTES:

COVERS SHALL BE CAST WITH THE LETTER "D" FOR STORM DRAINS

5 STORM DRAIN MANHOLE FRAME AND LID
NOT TO SCALE

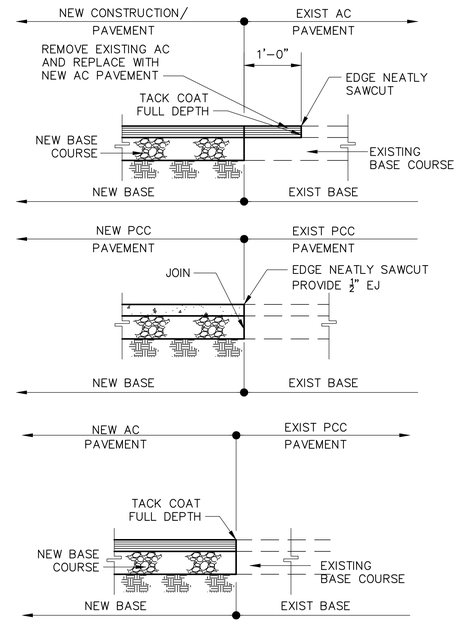

3 PAVEMENT JOINT DETAIL
NOT TO SCALE

THE CITY OF LOS ANGELES OR ITS OFFICERS OR AGENTS SHALL NOT BE RESPONSIBLE FOR THE ACCURACY OR COMPLETENESS OF ELECTRONIC COPIES OF THIS PLAN SHEET.

FILE PATH: A360://Studio City Recreation Center/SCRC-Project Model_Central_Final.rvt

TTLB TEMPLATE REVISION DATE: 09/25/17
SHEET ISSUE

REVISION DATES (DESIGN STAGE ONLY)

DEPARTMENT OF PUBLIC WORKS
CITY OF LOS ANGELES
BUREAU OF ENGINEERING

ENGINEERING
CITY OF LOS ANGELES

NO.	REVISION DESCRIPTION	DATE	BY

BUILDING NO. -

INDEX NO. **RP-300106**

RESPONSIBLE CHARGE ENGINEER — PROFESSIONAL ENGINEER — TED C. ALLEN — No. C36079 — Exp. 6/30/20 — CIVIL — STATE OF CALIFORNIA

CITY ENGINEER	DATE:
TED ALLEN, PE ARCHITECTURAL DIVISION LIC. NO.: C36079	1-24-2019
ENGINEER: VIRGILIO AOANAN	1-24-2019
DESIGNED BY: VIRGILIO AOANAN	1-24-2019
DRAWN BY: A.WAGGONER	1-24-2019
CHECKED BY: VIRGILIO AOANAN	1-24-2019
APPROVED BY:MAHMOOD KARIMZADEH, AIA, DEPUTY CITY ENGINEER	1-24-2019

CLIENT: DEPARTMENT OF RECREATION AND PARKS
GENERAL MANAGER: MICHAEL A. SHULL

SHEET TITLE: MISCELLANEOUS DETAILS

PROJECT: STUDIO CITY GYMNASIUM

ADDRESS: 12621 RYE STREET, STUDIO CITY, CA 91604

BUREAU OF ENGINEERING — OFFICIAL RECORD

MCA ENGINEERS, INC. — 1241 S. Gaffey Avenue, Suite 200, San Pedro, California CA 90731 — tel: 310.519.6646 fax: 310.519.6647

WORK ORDER E170267B
PLAN FILE 860
DRAWING **C502**
SHEET 46 OF SHEETS 211

PLOTTED: 7/1/2019 11:34:04 AM

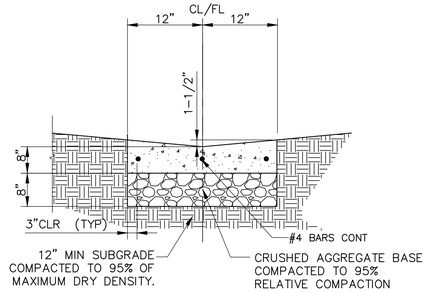

NOTES:

1. FOR CONSTRUCTION JOINTS, EXPANSION JOINTS, AND FINISH SURFACE REQUIREMENTS, REFER TO DETAILS 2 AND 3 ON SHEET C502.
2. CONCRETE, fc'=3,500 psi @ 28 DAYS. REBARS, fy=60,000 psi ASTM A615.

1 V GUTTER DETAIL
NOT TO SCALE

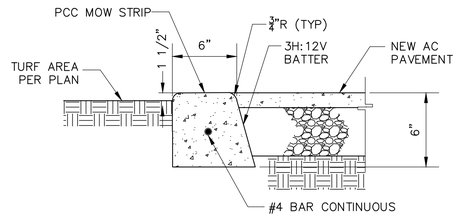

NOTES:

1. CONCRETE WORK SHALL CONFORM TO THE TECHNICAL AND STANDARD SPECIFICATIONS.
2. PROVIDE WEAKENED PLANE JOINTS AT 10' MAXIMUM SPACE AND AT ANGLE POINTS.

BUREAU OF ENGINEERING
OFFICIAL RECORD

2 MOWSTRIP
NOT TO SCALE

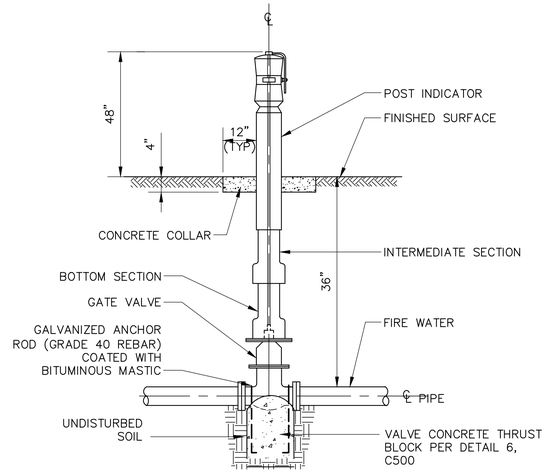

3 POST INDICATOR VALVE
NOT TO SCALE

Low Impact Development (LID)
Post Construction Stormwater Mitigation
Best Management Practices (BMPs)

STORMWATER BMP(s) VERIFICATION

Upon LADBS Inspector Verification that approved stormwater BMPs are in place, a Stormwater Observation Report (SOR) Form shall be submitted to Department of Public Works, Bureau of Sanitation. 201 N. Figueroa, 3rd floor, station 18.

Project Address: 12621 RYE ST STUDIO CITY, CA 91604

RESIDENTIAL (4 UNITS OR LESS, <10,000 SF, <2,500 SF within a ESA)

Item #	Stormwater BMP	Description (Units, total)	Reference Sheet(s)* (Sheet #)
1	Rain Tank(s) – 50 to 129 gal each		
2	Rain Tank(s) – > 130 gal min		
3	Shade Tree - min 15 gal		
4	Flow thru Planter(s)		
5	Permeable pavers / Porous concrete (min 10% open space)	☐ Incidental; _____ total SF ☐ Infiltration; _____ total SF	
6	Rain Garden	☐ #____ - Lined; _____ total SF ☐ #____ - Unlined; _____ total SF	
7	Dry Well		
8	SUMP Pump (modification was not required)		

ALL OTHER DEVELOPMENT
(Residential: 5 ≥ units, 10,000 ≥ SF, within a ESA and ≥2,500SF)

	Item #	Stormwater BMP	Description (Units, total)	Reference Sheet(s)* (Sheet #)
Infiltration	1	Infiltration Basin / Trench		
	2	Dry Well	2	C400/C401/C402/C505
	3	Permeable pavers / Porous concrete (min 10% open space)	☐ Incidental;_____ total SF ☐ Infiltration;_____ total SF	
Capture & Use	4	Rain Tank(s) – 530 gal min		
	5	Cistern	☐ Above Grade ☐ Below Grade	
Treat & Discharge	6	Flow thru Planter(s)		
	7	Biofiltration	☐ #____ - Lined; _____ total SF ☐ #____ - Unlined; _____ total SF	
	8	Vegetative Swale / Filter Strip		
	9	Catch Basin Filter(s)		
	10	Trench Drain Filter(s)		
	11	Down Spout Filter(s)		
	12	SUMP Pump (modification was not required)		

* At a minimum: Site Plan, Architectural Elevations, Roof Plan, Civil Sheets and Detail

4 BMP VERIFICATION
NOT TO SCALE

STORMWATER OBSERVATION REPORT FORM
(Residential ≥ 5 units & All other Development)

LOW IMPACT DEVELOPMENT

IN THE EVENT THAT THE APPROVED STORMWATER BMP CANNOT BE BUILT PER PLANS (OR ANY MODIFICATION), CONSULT WITH BUREAU OF SANITATION STAFF PRIOR TO ANY PLAN MODIFICATIONS. FAILURE TO DO SO MAY DELAY OBTAINING A FINAL APPROVAL AND CERTIFICATE OF OCCUPANCY (C OF O).

STORMWATER OBSERVATION *means the visual observation of the stormwater related Best Management Practices (BMPs) for conformance with the approved LID Plan at significant construction stages and at completion of the project. Stormwater observation does not include or waive the responsibility for the inspections required by Section 108 or other sections of the City of Los Angeles Building Code.*

STORMWATER OBSERVATION *must be performed by the engineer or architect responsible for the approved LID Plan or designated staff in their employment.* ***As part of the observation, provide photos of the BMPs taken during various construction phases.***

STORMWATER OBSERVATION REPORT *must be signed and stamped (see below) by the engineer or architect responsible for the approved LID Plan and submitted to the city prior to the issuance to the certificate of occupancy.* ***PRIOR TO CERTIFICATE OF OCCUPANCY (C of O), SOR FORM, PRINTED PHOTOS OF THE BMPS TAKEN DURING VARIOUS CONSTRUCTION PHASES AND APPROVED STAMPED PLANS BY THE BUREAU OF SANITATION MUST BE SUBMITTED TO THE PUBLIC COUNTER FOR STAFF APPROVAL.***

Project Address: 12621 RYE ST STUDIO CITY, CA 91604	Building Permit No.: 17010-10000-04080
Name of Engineer/Architect responsible for the approved LID Plan: Virgil Aoanan	Phone Number: 323-729-6098

List all BMPs installed as part of the project: Coordinates of the most significant (or typical) BMPs:

BMP Type:DRYWELL # of units: _2__ Lat: _34.15157_____ ; Long:_-118.40898___ ***Ex: Lat: 34.04152; Long: -118.25962 (5 sig digits)***	BMP Type:_____ # of units: _____ Lat: _____ ; Long:_____
BMP Type:_____ # of units: _____ Lat: _____ ; Long:_____	BMP Type:_____ # of units: _____ Lat: _____ ; Long:_____

I DECLARE THAT THE FOLLOWING STATEMENTS ARE TRUE TO THE BEST OF MY KNOWLEDGE:

1. I am the engineer or architect responsible for the approved LID Plan, and;
2. I, or designated staff under my responsible charge, has preformed the required site visits at each significant construction stage and at the completion to verify that the Best Management Practices (BMPs) as shown on approved plans have been constructed and installed in accordance with the approved LID Plan.

Signature Date

Wet Stamp of Engineer or Architect

5 STORMWATER OBSERVATION REPORT
NOT TO SCALE

MCA ENGINEERS, INC.
2101 E. Katella Avenue, Suite 220, Anaheim, CA 92806
Tel: 323.729.6098 Fax: 323.729.6043

BUREAU OF ENGINEERING
CITY OF LOS ANGELES
DEPARTMENT OF PUBLIC WORKS

ENGINEERING
CITY OF LOS ANGELES

NO.	REVISION DESCRIPTION	DATE	BY

BUILDING NO. -
INDEX NO. **RP-300106**

PROFESSIONAL ENGINEER — VIRGIL AOANAN — No. C36079 — Exp. 6/30/20 — CIVIL — STATE OF CALIFORNIA

CITY ENGINEER	DATE:
TED ALLEN, PE	1-24-2019
ARCHITECTURAL DIVISION	1-24-2019
ENGINEER: VIRGILIO AOANAN LIC. NO.: C36079	1-24-2019
DESIGNED BY: VIRGILIO AOANAN	1-24-2019
DRAWN BY: A.WAGGONER	1-24-2019
CHECKED BY: VIRGILIO AOANAN	1-24-2019
APPROVED BY:MAHMOOD KARIMZADEH, AIA, DEPUTY CITY ENGINEER	1-24-2019

CLIENT: DEPARTMENT OF RECREATION AND PARKS
GENERAL MANAGER: MICHAEL A. SHULL
SHEET TITLE: MISCELLANEOUS DETAILS
PROJECT: STUDIO CITY GYMNASIUM
ADDRESS: 12621 RYE STREET, STUDIO CITY, CA 91604

WORK ORDER E170267B
PLAN FILE 860
DRAWING C503
SHEET 47 OF SHEETS 211

PLOTTED: 7/1/2019 11:34:04 AM

THE CITY OF LOS ANGELES OR ITS OFFICERS OR AGENTS SHALL NOT BE RESPONSIBLE FOR THE ACCURACY OR COMPLETENESS OF ELECTRONIC COPIES OF THIS PLAN SHEET.

FILE PATH: A360://Studio City Recreation Center/SCRC-Project Model_Central_Final.rvt

TTLB TEMPLATE REVISION DATE: 09/25/17
SHEET ISSUE

REVISION DATES (DESIGN STAGE ONLY)

PROJECT INFORMATION	
ENGINEERED PRODUCT MANAGER:	TERENCE ZHAO 626-425-2874 TERENCE.ZHAO@ADS-PIPE.COM
ADS SALES REP:	ARNE ERIKSEN 951-796-2048 ARNE.ERIKSEN@ADS-PIPE.COM
PROJECT NO:	S112179

ADVANCED DRAINAGE SYSTEMS, INC.

SiteASSIST by StormTech

FOR STORMTECH INSTRUCTIONS, DOWNLOAD THE INSTALLATION APP

STUDIO CITY

STUDIO CITY, CA

MC-4500 STORMTECH CHAMBER SPECIFICATIONS

1. CHAMBERS SHALL BE STORMTECH MC-4500.
2. CHAMBERS SHALL BE ARCH-SHAPED AND SHALL BE MANUFACTURED FROM VIRGIN, IMPACT-MODIFIED POLYPROPYLENE COPOLYMERS.
3. CHAMBERS SHALL MEET THE REQUIREMENTS OF ASTM F2418-16a, "STANDARD SPECIFICATION FOR POLYPROPYLENE (PP) CORRUGATED WALL STORMWATER COLLECTION CHAMBERS" CHAMBER CLASSIFICATION 60x101.
4. CHAMBER ROWS SHALL PROVIDE CONTINUOUS, UNOBSTRUCTED INTERNAL SPACE WITH NO INTERNAL SUPPORTS THAT WOULD IMPEDE FLOW OR LIMIT ACCESS FOR INSPECTION.
5. THE STRUCTURAL DESIGN OF THE CHAMBERS, THE STRUCTURAL BACKFILL, AND THE INSTALLATION REQUIREMENTS SHALL ENSURE THAT THE LOAD FACTORS SPECIFIED IN THE AASHTO LRFD BRIDGE DESIGN SPECIFICATIONS, SECTION 12.12, ARE MET FOR: 1) LONG-DURATION DEAD LOADS AND 2) SHORT-DURATION LIVE LOADS, BASED ON THE AASHTO DESIGN TRUCK WITH CONSIDERATION FOR IMPACT AND MULTIPLE VEHICLE PRESENCES.
6. CHAMBERS SHALL BE DESIGNED, TESTED AND ALLOWABLE LOAD CONFIGURATIONS DETERMINED IN ACCORDANCE WITH ASTM F2787, "STANDARD PRACTICE FOR STRUCTURAL DESIGN OF THERMOPLASTIC CORRUGATED WALL STORMWATER COLLECTION CHAMBERS". LOAD CONFIGURATIONS SHALL INCLUDE: 1) INSTANTANEOUS (<1 MIN) AASHTO DESIGN TRUCK LIVE LOAD ON MINIMUM COVER 2) MAXIMUM PERMANENT (75-YR) COVER LOAD AND 3) ALLOWABLE COVER WITH PARKED (1-WEEK) AASHTO DESIGN TRUCK
7. REQUIREMENTS FOR HANDLING AND INSTALLATION:
   - TO MAINTAIN THE WIDTH OF CHAMBERS DURING SHIPPING AND HANDLING, CHAMBERS SHALL HAVE INTEGRAL, INTERLOCKING STACKING LUGS
   - TO ENSURE A SECURE JOINT DURING INSTALLATION AND BACKFILL, THE HEIGHT OF THE CHAMBER JOINT SHALL NOT BE LESS THAN 3"
   - TO ENSURE THE INTEGRITY OF THE ARCH SHAPE DURING INSTALLATION, a) THE ARCH STIFFNESS CONSTANT AS DEFINED IN SECTION 6.2.8 OF ASTM F2418 SHALL BE GREATER THAN OR EQUAL TO 500 LBS/IN/IN. AND b) TO RESIST CHAMBER DEFORMATION DURING INSTALLATION AT ELEVATED TEMPERATURES (ABOVE 73° F / 23° C), CHAMBERS SHALL BE PRODUCED FROM REFLECTIVE GOLD OR YELLOW COLORS.
8. ONLY CHAMBERS THAT ARE APPROVED BY THE SITE DESIGN ENGINEER WILL BE ALLOWED. UPON REQUEST BY THE SITE DESIGN ENGINEER OR OWNER, THE CHAMBER MANUFACTURER SHALL SUBMIT A STRUCTURAL EVALUATION FOR APPROVAL BEFORE DELIVERING CHAMBERS TO THE PROJECT SITE AS FOLLOWS:
   - THE STRUCTURAL EVALUATION SHALL BE SEALED BY A REGISTERED PROFESSIONAL ENGINEER.
   - THE STRUCTURAL EVALUATION SHALL DEMONSTRATE THAT THE SAFETY FACTORS ARE GREATER THAN OR EQUAL TO 1.95 FOR DEAD LOAD AND 1.75 FOR LIVE LOAD, THE MINIMUM REQUIRED BY ASTM F2787 AND BY SECTIONS 3 AND 12.12 OF THE AASHTO LRFD BRIDGE DESIGN SPECIFICATIONS FOR THERMOPLASTIC PIPE.
   - THE TEST DERIVED CREEP MODULUS AS SPECIFIED IN ASTM F2418 SHALL BE USED FOR PERMANENT DEAD LOAD DESIGN EXCEPT THAT IT SHALL BE THE 75-YEAR MODULUS USED FOR DESIGN.
9. CHAMBERS AND END CAPS SHALL BE PRODUCED AT AN ISO 9001 CERTIFIED MANUFACTURING FACILITY.

IMPORTANT - NOTES FOR THE BIDDING AND INSTALLATION OF MC-4500 CHAMBER SYSTEM

1. STORMTECH MC-4500 CHAMBERS SHALL NOT BE INSTALLED UNTIL THE MANUFACTURER'S REPRESENTATIVE HAS COMPLETED A PRE-CONSTRUCTION MEETING WITH THE INSTALLERS.
2. STORMTECH MC-4500 CHAMBERS SHALL BE INSTALLED IN ACCORDANCE WITH THE "STORMTECH MC-3500/MC-4500 CONSTRUCTION GUIDE".
3. CHAMBERS ARE NOT TO BE BACKFILLED WITH A DOZER OR EXCAVATOR SITUATED OVER THE CHAMBERS. STORMTECH RECOMMENDS 3 BACKFILL METHODS:
   - STONESHOOTER LOCATED OFF THE CHAMBER BED.
   - BACKFILL AS ROWS ARE BUILT USING AN EXCAVATOR ON THE FOUNDATION STONE OR SUBGRADE.
   - BACKFILL FROM OUTSIDE THE EXCAVATION USING A LONG BOOM HOE OR EXCAVATOR.
4. THE FOUNDATION STONE SHALL BE LEVELED AND COMPACTED PRIOR TO PLACING CHAMBERS.
5. JOINTS BETWEEN CHAMBERS SHALL BE PROPERLY SEATED PRIOR TO PLACING STONE.
6. MAINTAIN MINIMUM 9" (230 mm) SPACING BETWEEN THE CHAMBER ROWS.
7. INLET AND OUTLET MANIFOLDS MUST BE INSERTED A MINIMUM OF 12" (300 mm) INTO CHAMBER END CAPS.
8. EMBEDMENT STONE SURROUNDING CHAMBERS MUST BE A CLEAN, CRUSHED, ANGULAR STONE MEETING THE AASHTO M43 DESIGNATION OF #3 OR #4.
9. STONE SHALL BE BROUGHT UP EVENLY AROUND CHAMBERS SO AS NOT TO DISTORT THE CHAMBER SHAPE. STONE DEPTHS SHOULD NEVER DIFFER BY MORE THAN 12" (300 mm) BETWEEN ADJACENT CHAMBER ROWS.
10. STONE MUST BE PLACED ON THE TOP CENTER OF THE CHAMBER TO ANCHOR THE CHAMBERS IN PLACE AND PRESERVE ROW SPACING.
11. THE CONTRACTOR MUST REPORT ANY DISCREPANCIES WITH CHAMBER FOUNDATION MATERIAL BEARING CAPACITIES TO THE SITE DESIGN ENGINEER.
12. ADS RECOMMENDS THE USE OF "FLEXSTORM CATCH IT" INSERTS DURING CONSTRUCTION FOR ALL INLETS TO PROTECT THE SUBSURFACE STORMWATER MANAGEMENT SYSTEM FROM CONSTRUCTION SITE RUNOFF.

NOTES FOR CONSTRUCTION EQUIPMENT

1. STORMTECH MC-4500 CHAMBERS SHALL BE INSTALLED IN ACCORDANCE WITH THE "STORMTECH MC-3500/MC-4500 CONSTRUCTION GUIDE".
2. THE USE OF EQUIPMENT OVER MC-4500 CHAMBERS IS LIMITED:
   - NO EQUIPMENT IS ALLOWED ON BARE CHAMBERS.
   - NO RUBBER TIRED LOADER, DUMP TRUCK, OR EXCAVATORS ARE ALLOWED UNTIL PROPER FILL DEPTHS ARE REACHED IN ACCORDANCE WITH THE "STORMTECH MC-3500/MC-4500 CONSTRUCTION GUIDE".
   - WEIGHT LIMITS FOR CONSTRUCTION EQUIPMENT CAN BE FOUND IN THE "STORMTECH MC-3500/MC-4500 CONSTRUCTION GUIDE".
3. FULL 36" (900 mm) OF STABILIZED COVER MATERIALS OVER THE CHAMBERS IS REQUIRED FOR DUMP TRUCK TRAVEL OR DUMPING.

USE OF A DOZER TO PUSH EMBEDMENT STONE BETWEEN THE ROWS OF CHAMBERS MAY CAUSE DAMAGE TO CHAMBERS AND IS NOT AN ACCEPTABLE BACKFILL METHOD. ANY CHAMBERS DAMAGED BY USING THE "DUMP AND PUSH" METHOD ARE NOT COVERED UNDER THE STORMTECH STANDARD WARRANTY.

CONTACT STORMTECH AT 1-888-892-2694 WITH ANY QUESTIONS ON INSTALLATION REQUIREMENTS OR WEIGHT LIMITS FOR CONSTRUCTION EQUIPMENT.

©2013 ADS, INC.

PROPOSED LAYOUT - WEST BED

13	STORMTECH MC-4500 CHAMBERS
4	STORMTECH MC-4500 END CAPS
12	STONE ABOVE (in)
12	STONE BELOW (in)
40	% STONE VOID
3123	INSTALLED SYSTEM VOLUME (CF) (PERIMETER STONE INCLUDED)
788	SYSTEM AREA (ft²)
118	SYSTEM PERIMETER (ft)

PROPOSED ELEVATIONS - WEST BED

637.00	MAXIMUM ALLOWABLE GRADE (TOP OF PAVEMENT/UNPAVED)
632.50	MINIMUM ALLOWABLE GRADE (UNPAVED WITH TRAFFIC)
632.00	MINIMUM ALLOWABLE GRADE (UNPAVED NO TRAFFIC)
632.00	MINIMUM ALLOWABLE GRADE (BASE OF FLEXIBLE PAVEMENT)
632.00	MINIMUM ALLOWABLE GRADE (TOP OF RIGID PAVEMENT)
631.00	TOP OF STONE
630.00	TOP OF MC-4500 CHAMBER
627.97	12" TOP MANIFOLD INVERT
625.19	24" ISOLATOR ROW CONNECTION INVERT
625.16	18" BOTTOM CONNECTION INVERT
625.00	BOTTOM OF MC-4500 CHAMBER
624.00	UNDERDRAIN INVERT
624.00	BOTTOM OF STONE

NOTES

- MANIFOLD SIZE TO BE DETERMINED BY SITE DESIGN ENGINEER. SEE TECH SHEET #7 FOR MANIFOLD SIZING GUIDANCE.
- DUE TO THE ADAPTATION OF THIS CHAMBER SYSTEM TO SPECIFIC SITE AND DESIGN CONSTRAINTS, IT MAY BE NECESSARY TO CUT AND COUPLE ADDITIONAL PIPE TO STANDARD MANIFOLD COMPONENTS IN THE FIELD.
- THE SITE DESIGN ENGINEER MUST REVIEW ELEVATIONS AND IF NECESSARY ADJUST GRADING TO ENSURE THE CHAMBER COVER REQUIREMENTS ARE MET.
- THIS CHAMBER SYSTEM WAS DESIGNED WITHOUT SITE-SPECIFIC INFORMATION ON SOIL CONDITIONS OR BEARING CAPACITY. THE SITE DESIGN ENGINEER IS RESPONSIBLE FOR DETERMINING THE SUITABILITY OF THE SOIL AND PROVIDING THE BEARING CAPACITY OF THE INSITU SOILS. THE BASE STONE DEPTH MAY BE INCREASED OR DECREASED ONCE THIS INFORMATION IS PROVIDED.
- THIS PLAN REFLECTS THE CHAMBER SYSTEM DESIGN BY THE SITE DESIGN ENGINEER USING STORMTECH COMPONENTS. THE SUITABILITY OF THE CHAMBER SYSTEM TO MEET ANY FUNCTIONAL REQUIREMENTS ARE THE RESPONSIBILITY OF THE SITE DESIGN ENGINEER. STORMTECH'S SCOPE OF WORK IS LIMITED TO THE ASSEMBLED PRODUCT DIMENSIONS AND SPECIFICATIONS FOR INSTALLATION.
- TO MINIMIZE THE LEAKAGE POTENTIAL OF LINER SYSTEMS, THE MEMBRANE LINER SYSTEM SHOULD BE DESIGNED BY A KNOWLEDGEABLE GEOTEXTILE PROFESSIONAL AND INSTALLED BY A QUALIFIED CONTRACTOR.

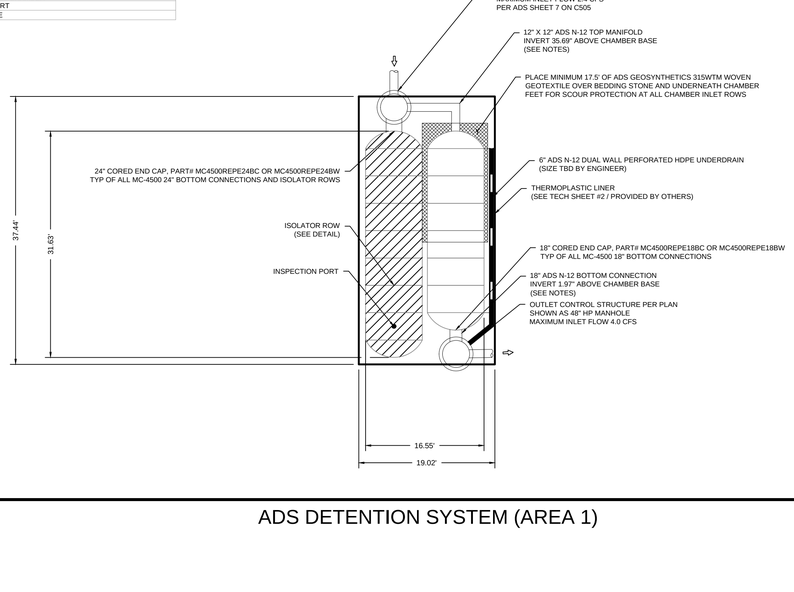

ADS DETENTION SYSTEM (AREA 1)

PROPOSED LAYOUT - EAST BED

5	STORMTECH MC-4500 CHAMBERS
2	STORMTECH MC-4500 END CAPS
12	STONE ABOVE (in)
12	STONE BELOW (in)
40	% STONE VOID
1522	INSTALLED SYSTEM VOLUME (CF) (PERIMETER STONE INCLUDED)
414	SYSTEM AREA (ft²)
95	SYSTEM PERIMETER (ft)

PROPOSED ELEVATIONS - EAST BED

636.00	MAXIMUM ALLOWABLE GRADE (TOP OF PAVEMENT/UNPAVED)
631.50	MINIMUM ALLOWABLE GRADE (UNPAVED WITH TRAFFIC)
631.00	MINIMUM ALLOWABLE GRADE (UNPAVED NO TRAFFIC)
631.00	MINIMUM ALLOWABLE GRADE (BASE OF FLEXIBLE PAVEMENT)
631.00	MINIMUM ALLOWABLE GRADE (TOP OF RIGID PAVEMENT)
630.00	TOP OF STONE
629.00	TOP OF MC-4500 CHAMBER
624.19	24" ISOLATOR ROW CONNECTION INVERT
624.00	BOTTOM OF MC-4500 CHAMBER
623.00	UNDERDRAIN INVERT
623.00	BOTTOM OF STONE

NOTES

- MANIFOLD SIZE TO BE DETERMINED BY SITE DESIGN ENGINEER. SEE TECH SHEET #7 FOR MANIFOLD SIZING GUIDANCE.
- DUE TO THE ADAPTATION OF THIS CHAMBER SYSTEM TO SPECIFIC SITE AND DESIGN CONSTRAINTS, IT MAY BE NECESSARY TO CUT AND COUPLE ADDITIONAL PIPE TO STANDARD MANIFOLD COMPONENTS IN THE FIELD.
- THE SITE DESIGN ENGINEER MUST REVIEW ELEVATIONS AND IF NECESSARY ADJUST GRADING TO ENSURE THE CHAMBER COVER REQUIREMENTS ARE MET.
- THIS CHAMBER SYSTEM WAS DESIGNED WITHOUT SITE-SPECIFIC INFORMATION ON SOIL CONDITIONS OR BEARING CAPACITY. THE SITE DESIGN ENGINEER IS RESPONSIBLE FOR DETERMINING THE SUITABILITY OF THE SOIL AND PROVIDING THE BEARING CAPACITY OF THE INSITU SOILS. THE BASE STONE DEPTH MAY BE INCREASED OR DECREASED ONCE THIS INFORMATION IS PROVIDED.
- THIS PLAN REFLECTS THE CHAMBER SYSTEM DESIGN BY THE SITE DESIGN ENGINEER USING STORMTECH COMPONENTS. THE SUITABILITY OF THE CHAMBER SYSTEM TO MEET ANY FUNCTIONAL REQUIREMENTS ARE THE RESPONSIBILITY OF THE SITE DESIGN ENGINEER. STORMTECH'S SCOPE OF WORK IS LIMITED TO THE ASSEMBLED PRODUCT DIMENSIONS AND SPECIFICATIONS FOR INSTALLATION.
- TO MINIMIZE THE LEAKAGE POTENTIAL OF LINER SYSTEMS, THE MEMBRANE LINER SYSTEM SHOULD BE DESIGNED BY A KNOWLEDGEABLE GEOTEXTILE PROFESSIONAL AND INSTALLED BY A QUALIFIED CONTRACTOR.

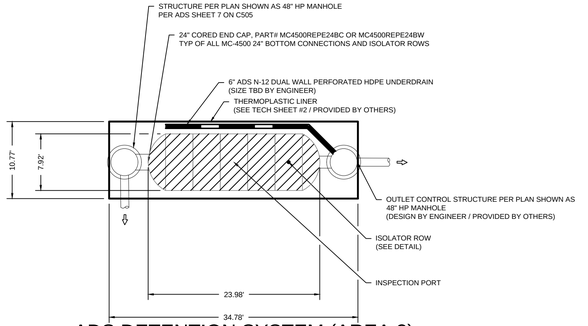

ADS DETENTION SYSTEM (AREA 2)

BUREAU OF ENGINEERING — OFFICIAL RECORD

ACCEPTABLE FILL MATERIALS: STORMTECH MC-4500 CHAMBER SYSTEMS

	MATERIAL LOCATION	DESCRIPTION	AASHTO MATERIAL CLASSIFICATIONS	COMPACTION / DENSITY REQUIREMENT
D	**FINAL FILL:** FILL MATERIAL FOR LAYER 'D' STARTS FROM THE TOP OF THE 'C' LAYER TO THE BOTTOM OF FLEXIBLE PAVEMENT OR UNPAVED FINISHED GRADE ABOVE. NOTE THAT PAVEMENT SUBBASE MAY BE PART OF THE 'D' LAYER	ANY SOIL/ROCK MATERIALS, NATIVE SOILS, OR PER ENGINEER'S PLANS. CHECK PLANS FOR PAVEMENT SUBGRADE REQUIREMENTS.	N/A	PREPARE PER SITE DESIGN ENGINEER'S PLANS. PAVED INSTALLATIONS MAY HAVE STRINGENT MATERIAL AND PREPARATION REQUIREMENTS.
C	**INITIAL FILL:** FILL MATERIAL FOR LAYER 'C' STARTS FROM THE TOP OF THE EMBEDMENT STONE ('B' LAYER) TO 24" (600 mm) ABOVE THE TOP OF THE CHAMBER. NOTE THAT PAVEMENT SUBBASE MAY BE A PART OF THE 'C' LAYER.	GRANULAR WELL-GRADED SOIL/AGGREGATE MIXTURES, <35% FINES OR PROCESSED AGGREGATE. MOST PAVEMENT SUBBASE MATERIALS CAN BE USED IN LIEU OF THIS LAYER.	AASHTO M145[1] A-1, A-2-4, A-3 OR AASHTO M43[1] 3, 357, 4, 467, 5, 56, 57, 6, 67, 68, 7, 78, 8, 89, 9, 10	BEGIN COMPACTIONS AFTER 24" (600 mm) OF MATERIAL OVER THE CHAMBERS IS REACHED. COMPACT ADDITIONAL LAYERS IN 12" (300 mm) MAX LIFTS TO A MIN. 95% PROCTOR DENSITY FOR WELL GRADED MATERIAL AND 95% RELATIVE DENSITY FOR PROCESSED AGGREGATE MATERIALS.
B	**EMBEDMENT STONE:** FILL SURROUNDING THE CHAMBERS FROM THE FOUNDATION STONE ('A' LAYER) TO THE 'C' LAYER ABOVE.	CLEAN, CRUSHED, ANGULAR STONE	AASHTO M43[1] 3, 4	NO COMPACTION REQUIRED.
A	**FOUNDATION STONE:** FILL BELOW CHAMBERS FROM THE SUBGRADE UP TO THE FOOT (BOTTOM) OF THE CHAMBER.	CLEAN, CRUSHED, ANGULAR STONE	AASHTO M43[1] 3, 4	PLATE COMPACT OR ROLL TO ACHIEVE A FLAT SURFACE.[2,3]

PLEASE NOTE:
1. THE LISTED AASHTO DESIGNATIONS ARE FOR GRADATIONS ONLY. THE STONE MUST ALSO BE CLEAN, CRUSHED, ANGULAR. FOR EXAMPLE, A SPECIFICATION FOR #4 STONE WOULD STATE: "CLEAN, CRUSHED, ANGULAR NO. 4 (AASHTO M43) STONE".
2. STORMTECH COMPACTION REQUIREMENTS ARE MET FOR 'A' LOCATION MATERIALS WHEN PLACED AND COMPACTED IN 9" (230 mm) (MAX) LIFTS USING TWO FULL COVERAGES WITH A VIBRATORY COMPACTOR.
3. WHERE INFILTRATION SURFACES MAY BE COMPROMISED BY COMPACTION, FOR STANDARD DESIGN LOAD CONDITIONS, A FLAT SURFACE MAY BE ACHIEVED BY RAKING OR DRAGGING WITHOUT COMPACTION EQUIPMENT. FOR SPECIAL LOAD DESIGNS, CONTACT STORMTECH FOR COMPACTION REQUIREMENTS.

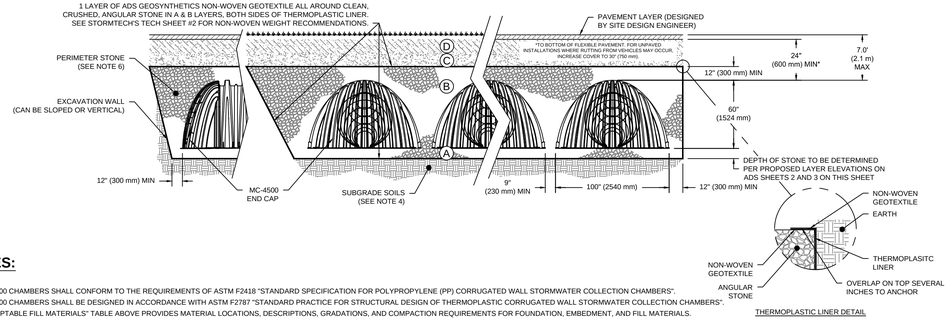

NOTES:

1. MC-4500 CHAMBERS SHALL CONFORM TO THE REQUIREMENTS OF ASTM F2418 "STANDARD SPECIFICATION FOR POLYPROPYLENE (PP) CORRUGATED WALL STORMWATER COLLECTION CHAMBERS".
2. MC-4500 CHAMBERS SHALL BE DESIGNED IN ACCORDANCE WITH ASTM F2787 "STANDARD PRACTICE FOR STRUCTURAL DESIGN OF THERMOPLASTIC CORRUGATED WALL STORMWATER COLLECTION CHAMBERS".
3. "ACCEPTABLE FILL MATERIALS" TABLE ABOVE PROVIDES MATERIAL LOCATIONS, DESCRIPTIONS, GRADATIONS, AND COMPACTION REQUIREMENTS FOR FOUNDATION, EMBEDMENT, AND FILL MATERIALS.
4. THE SITE DESIGN ENGINEER IS RESPONSIBLE FOR ASSESSING THE BEARING RESISTANCE (ALLOWABLE BEARING CAPACITY) OF THE SUBGRADE SOILS AND THE DEPTH OF FOUNDATION STONE WITH CONSIDERATION FOR THE RANGE OF EXPECTED SOIL MOISTURE CONDITIONS.
5. ONCE LAYER 'C' IS PLACED, ANY SOIL/MATERIAL CAN BE PLACED IN LAYER 'D' UP TO THE FINISHED GRADE. MOST PAVEMENT SUBBASE SOILS CAN BE USED TO REPLACE THE MATERIAL REQUIREMENTS OF LAYER 'C' OR 'D' AT THE SITE DESIGN ENGINEER'S DISCRETION.
6. PERIMETER STONE MUST BE EXTENDED HORIZONTALLY TO THE EXCAVATION WALL FOR BOTH VERTICAL AND SLOPED EXCAVATION WALLS.

THERMOPLASTIC LINER DETAIL

ADS DETENTION SYSTEM

NOT TO SCALE

NO.	REVISION DESCRIPTION	DATE	BY

BUILDING NO. -

INDEX NO. RP-300106

STUDIO CITY
STUDIO CITY,CA
DATE: 12/13/18 DRAWN: SDM
PROJECT #: S112179 CHECKED: RWD

ADS 4640 TRUEMAN BLVD HILLIARD, OH 43026

SHEET 2 OF 7 | SHEET 3 OF 7 | SHEET 4 OF 7

CITY OF LOS ANGELES — BUREAU OF ENGINEERING — DEPARTMENT OF PUBLIC WORKS

CITY ENGINEER: TED ALLEN, PE — ARCHITECTURAL DIVISION

	DATE:
ENGINEER: VIRGILIO AOANAN	LIC. NO.: C36079 — 1-24-2019
DESIGNED BY: VIRGILIO AOANAN	1-24-2019
DRAWN BY: A.WAGGONER	1-24-2019
CHECKED BY: VIRGILIO AOANAN	1-24-2019
APPROVED BY:MAHMOOD KARIMZADEH, AIA, DEPUTY CITY ENGINEER	1-24-2019

CLIENT: DEPARTMENT OF RECREATION AND PARKS
GENERAL MANAGER: MICHAEL A. SHULL

SHEET TITLE: MISCELLANEOUS DETAILS

PROJECT: STUDIO CITY GYMNASIUM

ADDRESS: 12621 RYE STREET, STUDIO CITY, CA 91604

MCA ENGINEERS, INC. — 3411 S. Atlantic Avenue, Suite 202, Alhambra, CA 91801 — Tel: 323.728.6048 Fax: 323.728.6042

WORK ORDER E170267B
PLAN FILE 860
DRAWING C504
SHEET 48 OF SHEETS 211

PLOTTED: 7/1/2019 11:34:04 AM

TTLB TEMPLATE REVISION DATE: SHEET ISSUE 09/25/17
FILE PATH: A:\860\\Studio City Recreation Center\SCRC-Project Model_Central_Final.rvt
THE CITY OF LOS ANGELES OR ITS OFFICERS OR AGENTS SHALL NOT BE RESPONSIBLE FOR THE ACCURACY OR COMPLETENESS OF ELECTRONIC COPIES OF THIS PLAN SHEET.
REVISION DATES (DESIGN STAGE ONLY)

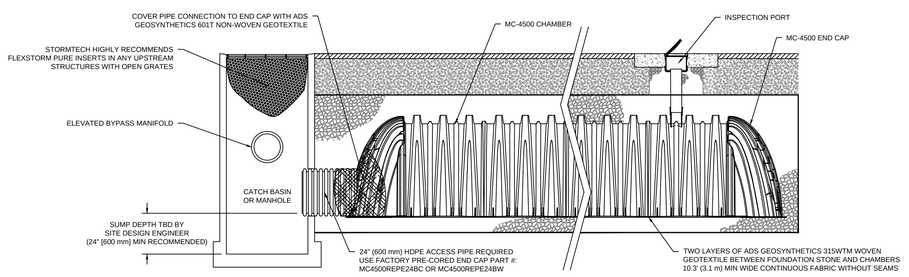

MC-4500 ISOLATOR ROW DETAIL
NTS

INSPECTION & MAINTENANCE

STEP 1) INSPECT ISOLATOR ROW FOR SEDIMENT
- A. INSPECTION PORTS (IF PRESENT)
  - A.1. REMOVE/OPEN LID ON NYLOPLAST INLINE DRAIN
  - A.2. REMOVE AND CLEAN FLEXSTORM FILTER IF INSTALLED
  - A.3. USING A FLASHLIGHT AND STADIA ROD, MEASURE DEPTH OF SEDIMENT AND RECORD ON MAINTENANCE LOG
  - A.4. LOWER A CAMERA INTO ISOLATOR ROW FOR VISUAL INSPECTION OF SEDIMENT LEVELS (OPTIONAL)
  - A.5. IF SEDIMENT IS AT, OR ABOVE, 3" (80 mm) PROCEED TO STEP 2. IF NOT, PROCEED TO STEP 3.
- B. ALL ISOLATOR ROWS
  - B.1. REMOVE COVER FROM STRUCTURE AT UPSTREAM END OF ISOLATOR ROW
  - B.2. USING A FLASHLIGHT, INSPECT DOWN THE ISOLATOR ROW THROUGH OUTLET PIPE
    - i) MIRRORS ON POLES OR CAMERAS MAY BE USED TO AVOID A CONFINED SPACE ENTRY
    - ii) FOLLOW OSHA REGULATIONS FOR CONFINED SPACE ENTRY IF ENTERING MANHOLE
  - B.3. IF SEDIMENT IS AT, OR ABOVE, 3" (80 mm) PROCEED TO STEP 2. IF NOT, PROCEED TO STEP 3.

STEP 2) CLEAN OUT ISOLATOR ROW USING THE JETVAC PROCESS
- A. A FIXED CULVERT CLEANING NOZZLE WITH REAR FACING SPREAD OF 45° (1.1 m) OR MORE IS PREFERRED
- B. APPLY MULTIPLE PASSES OF JETVAC UNTIL BACKFLUSH WATER IS CLEAN
- C. VACUUM STRUCTURE SUMP AS REQUIRED

STEP 3) REPLACE ALL COVERS, GRATES, FILTERS, AND LIDS; RECORD OBSERVATIONS AND ACTIONS.

STEP 4) INSPECT AND CLEAN BASINS AND MANHOLES UPSTREAM OF THE STORMTECH SYSTEM.

NOTES

1. INSPECT EVERY 6 MONTHS DURING THE FIRST YEAR OF OPERATION. ADJUST THE INSPECTION INTERVAL BASED ON PREVIOUS OBSERVATIONS OF SEDIMENT ACCUMULATION AND HIGH WATER ELEVATIONS.
2. CONDUCT JETTING AND VACTORING ANNUALLY OR WHEN INSPECTION SHOWS THAT MAINTENANCE IS NECESSARY.

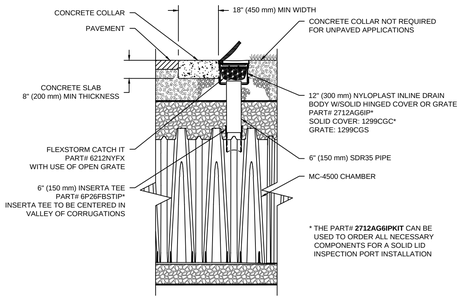

* THE PART# **2712AG6IPKIT** CAN BE USED TO ORDER ALL NECESSARY COMPONENTS FOR A SOLID LID INSPECTION PORT INSTALLATION

MC-4500 6" (150 mm) INSPECTION PORT DETAIL
NTS

UNDERDRAIN DETAIL
NTS

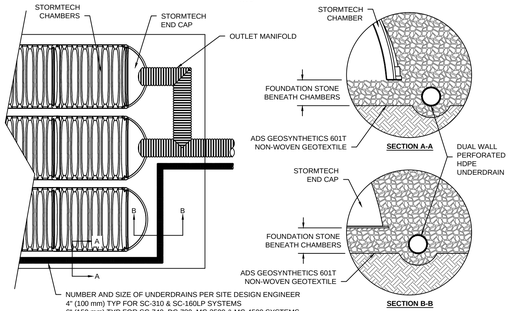

MC-4500 TECHNICAL SPECIFICATION
NTS

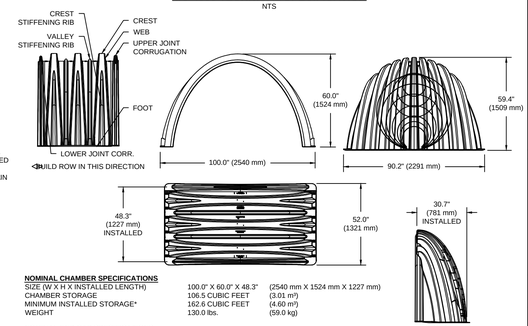

NOMINAL CHAMBER SPECIFICATIONS

SIZE (W X H X INSTALLED LENGTH)	100.0" X 60.0" X 48.3"	(2540 mm X 1524 mm X 1227 mm)
CHAMBER STORAGE	106.5 CUBIC FEET	(3.01 m³)
MINIMUM INSTALLED STORAGE*	162.6 CUBIC FEET	(4.60 m³)
WEIGHT	130.0 lbs.	(59.0 kg)

NOMINAL END CAP SPECIFICATIONS

SIZE (W X H X INSTALLED LENGTH)	90.2" X 59.4" X 30.7"	(2291 mm X 1509 mm X 781 mm)
END CAP STORAGE	35.7 CUBIC FEET	(1.01 m³)
MINIMUM INSTALLED STORAGE*	108.7 CUBIC FEET	(3.08 m³)
WEIGHT	135.0 lbs.	(61.2 kg)

*ASSUMES 12" (305 mm) STONE ABOVE, 9" (229 mm) STONE FOUNDATION AND BETWEEN CHAMBERS, 12" (305 mm) STONE PERIMETER IN FRONT OF END CAPS AND 40% STONE POROSITY.

STUBS AT BOTTOM OF END CAP FOR PART NUMBERS ENDING WITH "B"
STUBS AT TOP OF END CAP FOR PART NUMBERS ENDING WITH "T"
END CAPS WITH A WELDED CROWN PLATE END WITH "C"
END CAPS WITH A PREFABRICATED WELDED STUB END WITH "W"

PART #	STUB	B	C
MC4500REPE06T	6" (150 mm)	42.54" (1.081 m)	---
MC4500REPE06B		---	0.86" (22 mm)
MC4500REPE08T	8" (200 mm)	40.50" (1.029 m)	---
MC4500REPE08B		---	1.01" (26 mm)
MC4500REPE10T	10" (250 mm)	38.37" (975 mm)	---
MC4500REPE10B		---	1.33" (34 mm)
MC4500REPE12T	12" (300 mm)	35.69" (907 mm)	---
MC4500REPE12B		---	1.55" (39 mm)
MC4500REPE15T	15" (375 mm)	32.72" (831 mm)	---
MC4500REPE15B		---	1.70" (43 mm)
MC4500REPE18TC	18" (450 mm)	29.36" (746 mm)	---
MC4500REPE18TW			
MC4500REPE18BC		---	1.97" (50 mm)
MC4500REPE18BW			
MC4500REPE24TC	24" (600 mm)	23.05" (585 mm)	---
MC4500REPE24TW			
MC4500REPE24BC		---	2.26" (57 mm)
MC4500REPE24BW			
MC4500REPE30BC	30" (750 mm)	---	2.95" (75 mm)
MC4500REPE36BC	36" (900 mm)	---	3.25" (83 mm)
MC4500REPE42BC	42" (1050 mm)	---	3.55" (90 mm)

NOTE: ALL DIMENSIONS ARE NOMINAL

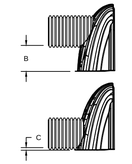

CUSTOM PRECORED INVERTS ARE AVAILABLE UPON REQUEST. INVENTORIED MANIFOLDS INCLUDE 12-24" (300-600 mm) SIZE ON SIZE AND 15-48" (375-1200 mm) ECCENTRIC MANIFOLDS. CUSTOM INVERT LOCATIONS ON THE MC-4500 END CAP CUT IN THE FIELD ARE NOT RECOMMENDED FOR PIPE SIZES GREATER THAN 10" (250 mm). THE INVERT LOCATION IN COLUMN 'B' ARE THE HIGHEST POSSIBLE FOR THE PIPE SIZE.

MC-SERIES END CAP INSERTION DETAIL
NTS

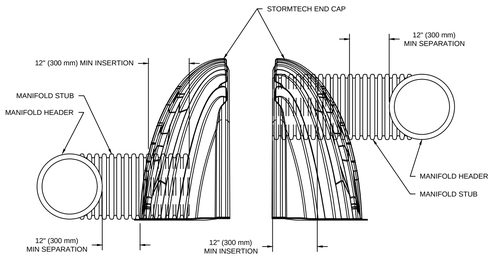

NOTE: MANIFOLD STUB MUST BE LAID HORIZONTAL FOR A PROPER FIT IN END CAP OPENING.

HP MANHOLE INSTALLATION FOR STORMTECH SYSTEMS
NTS

NOTES:
1. FOR BURIAL DEPTHS GREATER THAN 15' (4.57 m), OR WHERE GROUND WATER WILL BE ENCOUNTERED, CONTACT ADS ENGINEERING SERVICES.
2. AVOID CONSTRUCTION LOADING ON STRUCTURE PRIOR TO CONCRETE COLLAR INSTALLATION.

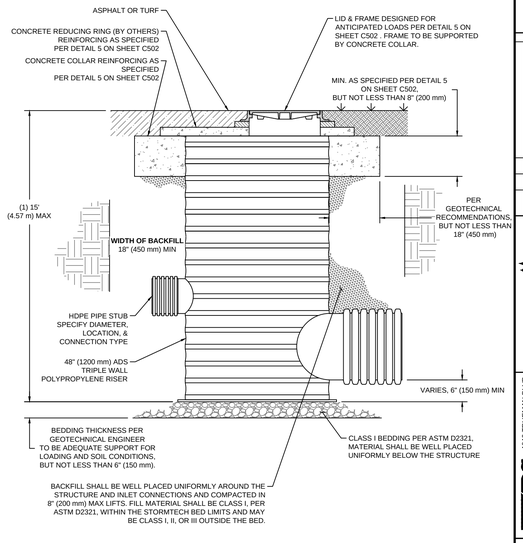

12621 W. Rye Street -19Dec18
The MaxWell® IV Drainage System Detail And Specifications

ITEM NUMBERS

1. **MANHOLE CONE** - MODIFIED FLAT BOTTOM.
2. **BOLTED RING & GRATE** - DIAMETER AS SHOWN. CLEAN CAST IRON WITH WORDING **"STORM WATER ONLY"** IN RAISED LETTERS. **BOLTED IN 2 LOCATIONS** AND SECURED TO CONE WITH MORTAR. RIM ELEVATION ±0.02' OF PLANS.
3. **GRADED BASIN OR PAVING** (BY OTHERS).
4. NON-WOVEN GEOTEXTILE SLEEVE, MIRAFITM/ 140 NL. HELD APPROX. 10 FEET OFF THE BOTTOM OF EXCAVATION.
5. **PUREFLO® DEBRIS SHIELD** - ROLLED 16 GA. STEEL X 24" LENGTH WITH VENTED ANTI-SIPHON AND INTERNAL .265" MAX. SWO FLATTENED EXPANDED STEEL SCREEN X 12" LENGTH. **FUSION BONDED EPOXY COATED**.
6. **PRE-CAST LINER** - 4000 PSI CONCRETE 48" ID. X 54" OD. **CENTER IN HOLE** AND ALIGN SECTIONS **TO MAXIMIZE BEARING SURFACE**. **EIGHT (8) PERFORATIONS PER FOOT, 2 ROWS MINIMUM.**
7. **MIN. 6' Ø DRILLED SHAFT**.
8. **SUPPORT BRACKET** - FORMED 12 GA. STEEL. **FUSION BONDED EPOXY COATED**.
9. **OVERFLOW PIPE** - SCH. 40 PVC MATED TO DRAINAGE PIPE AT BASE SEAL.
10. **DRAINAGE PIPE** - ADS HIGHWAY GRADE WITH TRI-A COUPLER. **SUSPEND PIPE** DURING BACKFILL OPERATIONS TO PREVENT BUCKLING OR BREAKAGE. DIAMETER AS NOTED.
11. **BASE SEAL** - GEOTEXTILE
12. **ROCK** - WASHED, SIZED BETWEEN 3/8" AND 1-1/2" TO **BEST COMPLEMENT SOIL CONDITIONS**.
13. **FLOFAST® DRAINAGE SCREEN** - SCH. 40 PVC 0.120" SLOTTED WELL SCREEN WITH 32 SLOTS PER ROW/FT. 120" OVERALL LENGTH WITH TRI-B COUPLER.
14. **MIN. 6' Ø SHAFT** - DRILLED TO **MAINTAIN PERMEABILITY** OF DRAINAGE SOILS.
15. **FABRIC SEAL** - U.V. RESISTANT GEOTEXTILE - **TO BE REMOVED BY CUSTOMER** AT PROJECT COMPLETION.
16. **ABSORBENT** - HYDROPHOBIC PETROCHEMICAL SPONGE. MIN. 128 OZ. CAPACITY. TYPICAL, TWO PER CHAMBER.
17. **FREEBOARD DEPTH VARIES** WITH INLET PIPE ELEVATION. INCREASE SETTLING CHAMBER DEPTH AS NEEDED TO MAINTAIN ALL INLET PIPE ELEVATIONS ABOVE OVERFLOW PIPE INLET.
18. STABILIZED BACKFILL - TWO-SACK SLURRY MIX.
19. **INLET PIPE** (BY OTHERS).

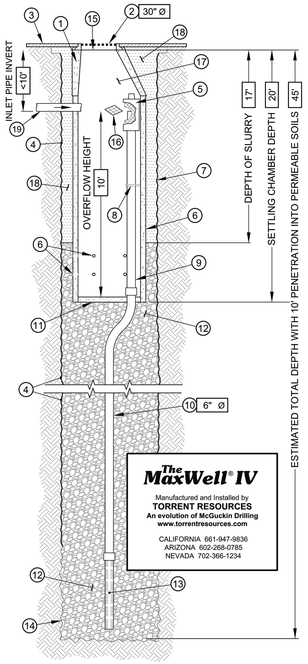

AZ Lic. ROC070495 A, ROC047067 B-4, ADWR 363
CA Lic. 526080, C-42, HAZ
NV Lic. 0035350 A - NM Lic. 90504 GF04
U.S. Patent No. 4,923,330 - ™ Trademark 1974, 1990, 2004

BUREAU OF ENGINEERING
OFFICIAL RECORD

STUDIO CITY
STUDIO CITY,CA
DATE: 12/13/18 | DRAWN: SDM | PROJECT #: S112179 | CHECKED: RWD

NO.	DATE	BY	REVISION DESCRIPTION
1	12/13/18	DKF	ELEVATION CHANGE
2	12/19/18	DKF	ADJ'S
3	12/20/18	MJK	REVISED BED

THE DRAWINGS AND SPECIFICATIONS AND COPIES THEREOF FURNISHED BY STORMTECH ARE AND SHALL REMAIN THE SITE DESIGN ENGINEER'S PROPERTY. THEY ARE TO BE USED ONLY WITH RESPECT TO THIS PROJECT AND SHALL NOT BE USED ON ANY OTHER PROJECT. WITH THE EXCEPTION OF THE SITE DESIGN ENGINEER OF RECORD, NO OTHER USE, REPRODUCTION, OR PUBLICATION BY ANY ENTITY IS PERMITTED. ACCESS TO THE DRAWINGS AND SPECIFICATIONS AS INSTRUMENTS OF SERVICE DOES NOT CONFER ANY RIGHTS FOR USE BY ANY PERSON OR ENTITY FOR ANY PURPOSE. ANY REUSE, UNAUTHORIZED MODIFICATION, OR PUBLICATION BY ANY ENTITY WITHOUT THE EXPRESS WRITTEN PERMISSION OF STORMTECH SHALL BE AT THE USER'S SOLE RISK AND WITHOUT LIABILITY TO STORMTECH. THE USER SHALL INDEMNIFY AND HOLD STORMTECH HARMLESS FROM AND AGAINST ANY DAMAGES, LIABILITIES OR COSTS, INCLUDING REASONABLE ATTORNEYS' FEES AND COURT COSTS ARISING OUT OF OR IN CONNECTION WITH SUCH UNAUTHORIZED USE. THE SITE DESIGN ENGINEER SHALL REVIEW THE DRAWINGS PRIOR TO CONSTRUCTION. IT IS THE ULTIMATE RESPONSIBILITY OF THE SITE DESIGN ENGINEER TO ENSURE THAT THE PRODUCTS DEPICTED AND ALL ASSOCIATED DETAILS MEET ALL APPLICABLE CODE, REGULATIONS, AND PROJECT REQUIREMENTS.

StormTech
70 INVICTA DRIVE, SUITE 3 | ROCKY HILL, CT | 06067
PH: (860) 529-8188 FAX: (888) 892-2694

4640 TRUEMAN BLVD
HILLIARD, OH 43026
Pro Engineering Software
0 10' 20'

5 SHEET OF 7

6 SHEET OF 7

7 SHEET OF 7

1 ADS DETENTION CONTINUED
NOT TO SCALE

2 DRYWELL
NOT TO SCALE

ENGINEERING
CITY OF LOS ANGELES

BUREAU OF ENGINEERING
DEPARTMENT OF PUBLIC WORKS
CITY OF LOS ANGELES

BUILDING NO. -
INDEX NO. RP-300106

CITY ENGINEER
TED ALLEN, PE
ARCHITECTURAL DIVISION
LIC. NO.: C36079

	DATE:
ENGINEER: VIRGILIO AOANAN	1-24-2019
DESIGNED BY: VIRGILIO AOANAN	1-24-2019
DRAWN BY: A.WAGGONER	1-24-2019
CHECKED BY: VIRGILIO AOANAN	1-24-2019
APPROVED BY:MAHMOOD KARIMZADEH; AIA, DEPUTY CITY ENGINEER	1-24-2019

CLIENT: DEPARTMENT OF RECREATION AND PARKS
GENERAL MANAGER: MICHAEL A. SHULL

SHEET TITLE: MISCELLANEOUS DETAILS
PROJECT: STUDIO CITY GYMNASIUM
ADDRESS: 12621 RYE STREET, STUDIO CITY, CA 91604

McA ENGINEERS, INC.
3415 S. Sepulveda Blvd., Suite 250, Los Angeles, CA 90034
Tel. 310.725.0338 Fax: 310.725.0342

WORK ORDER E170267B
PLAN FILE 860
DRAWING C505
SHEET 49 OF SHEETS 211

PLOTTED: 7/1/2019 11:34:04 AM

THE CITY OF LOS ANGELES OR ITS OFFICERS OR AGENTS SHALL NOT BE RESPONSIBLE FOR THE ACCURACY OR COMPLETENESS OF ELECTRONIC COPIES OF THIS PLAN SHEET.

FILE PATH: A360://Studio City Recreation Center/SCRC-Project Model_Central_Final.rvt

TTLB TEMPLATE REVISION DATE: 09/25/17
SHEET ISSUE

REVISION DATES (DESIGN STAGE ONLY)

BOARD OF
BUILDING AND SAFETY
COMMISSIONERS

VAN AMBATIELOS
PRESIDENT

E. FELICIA BRANNON
VICE-PRESIDENT

JOSELYN GEAGA-ROSENTHAL
GEORGE HOVAGUIMIAN
JAVIER NUNEZ

CITY OF LOS ANGELES
CALIFORNIA

ERIC GARCETTI
MAYOR

DEPARTMENT OF
BUILDING AND SAFETY
201 NORTH FIGUEROA STREET
LOS ANGELES, CA 90012

RAYMOND S. CHAN, C.E., S.E.
GENERAL MANAGER

FRANK BUSH
EXECUTIVE OFFICER

SOILS REPORT APPROVAL LETTER

December 20, 2018

LOG # 90285-01R
SOILS/GEOLOGY FILE - 2
LIQ
Correction: Revised to include conditions for main structure.

Recreational & Cultural Facilities
1149 S. Broadway, 8th Floor
Los Angeles, CA 90015

TRACT: 1000
LOT(S): 209
LOCATION: 12621 W. Rye St.

CURRENT REFERENCE REPORT/LETTER(S)	REPORT No.	DATE(S) OF DOCUMENT	PREPARED BY
Soils Report	14-134	10/26/2015	Geotechnical Engineering Group

PREVIOUS REFERENCE REPORT/LETTER(S)	REPORT No.	DATE(S) OF DOCUMENT	PREPARED BY
Dept. Correction Letter	90285	10/12/2015	LADBS
Soils Report	14-134	08/12/2015	Geotechnical Engineering Group
Laboratory Test Report	C-109511	07/23/2015	URS

The Grading Division of the Department of Building and Safety has reviewed the referenced report providing recommendations for the proposed one-story recreational center. According to the report, native soils were encountered during the exploration. The consultants recommend to support the proposed structure on mat-type foundations bearing on properly placed fill a minimum of 5 feet thick.

The site is located in a designated liquefaction hazard zone as shown on the "Seismic Hazard Zones" map issued by the State of California. The Liquefaction study included as a part of the report/s demonstrates that the site soils are subject to liquefaction. To mitigate the earthquake induced settlements it is proposed to use a mat foundation. The requirements of the 2014 City of Los Angeles Building Code, have been satisfied.

The referenced report is acceptable, provided the following conditions are complied with during site development:

(Note: Numbers in parenthesis ( ) refer to applicable sections of the 2014 City of LA Building Code. P/BC numbers refer the applicable Information Bulletin. Information Bulletins can be accessed on

AN EQUAL EMPLOYMENT OPPORTUNITY - AFFIRMATIVE ACTION EMPLOYER

the internet at LADBS.ORG.)

1. The soils engineer shall review and approve the detailed plans prior to issuance of any permit. This approval shall be by signature on the plans that clearly indicates the soils engineer has reviewed the plans prepared by the design engineer; and, that the plans included the recommendations contained in their reports (7006.1).
2. All recommendations of the report that are in addition to or more restrictive than the conditions contained herein shall be incorporated into the plans.
3. A copy of the subject and appropriate referenced reports and this approval letter shall be attached to the District Office and field set of plans (7006.1). Submit one copy of the above reports to the Building Department Plan Checker prior to issuance of the permit.
4. A grading permit shall be obtained for all structural fill and retaining wall backfill (106.1.2).
5. All man-made fill shall be compacted to a minimum 90 percent of the maximum dry density of the fill material per the latest version of ASTM D 1557. Where cohesionless soil having less than 15 percent finer than 0.005 millimeters is used for fill, it shall be compacted to a minimum of 95 percent relative compaction based on maximum dry density. Placement of gravel in lieu of compacted fill is only allowed if complying with LAMC Section 91.7011.3.
6. If import soils are used, no footings shall be poured until the soils engineer has submitted a compaction report containing in-place shear test data and settlement data to the Grading Division of the Department; and, obtained approval (7008.2).
7. Compacted fill shall extend beyond the footings a minimum distance equal to the depth of the fill below the bottom of footings or a minimum of three feet whichever is greater (7011.3).
8. Existing uncertified fill shall not be used for support of footings, concrete slabs or new fill (1809.2, 7011.3).
9. Drainage in conformance with the provisions of the Code shall be maintained during and subsequent to construction (7013.12).
10. The applicant is advised that the approval of this report does not waive the requirements for excavations contained in the General Safety Orders of the California Department of Industrial Relations (3301.1).
11. Excavations shall not remove lateral support from a public way, adjacent property or an existing structure. Note: Lateral support shall be considered to be removed when the excavation extends below a plane projected downward at an angle of 45 degrees from the bottom of a footing of an existing structure, from the edge of the public way or an adjacent property. (3307.3.1)
12. A supplemental report shall be submitted to the Grading Division of the Department containing recommendations for shoring, underpinning, and sequence of construction in the event that any excavation would remove lateral support to the public way, adjacent property,

or adjacent structures (3307.3). A plot plan and cross-section(s) showing the construction type, number of stories, and location of the structures adjacent to the excavation shall be part of the excavation plans (7006.2).

13. Prior to the issuance of any permit that authorizes an excavation where the excavation is to be of a greater depth than are the walls or foundation of any adjoining building or structure and located closer to the property line than the depth of the excavation, the owner of the subject site shall provide the Department with evidence that the adjacent property owner has been given a 30-day written notice of such intent to make an excavation (3307.1).
14. Unsurcharged temporary excavations over 4 feet exposing soil shall be trimmed back at a gradient not exceeding 1:1, as recommended.
15. All foundations shall derive entire support from properly placed fill, as recommended.
16. The seismic design shall be based on a Site Class D as recommended. All other seismic design parameters shall be reviewed by LADBS building plan check.
17. All roof, pad and deck drainage shall be conducted to the street in an acceptable manner in non-erosive devices or other approved location in a manner that is acceptable to the LADBS and the Department of Public Works (7013.10).
18. All concentrated drainage shall be conducted in an approved device and disposed of in a manner approved by the LADBS (7013.10).
19. The soils engineer shall inspect all excavations to determine that conditions anticipated in the report have been encountered and to provide recommendations for the correction of hazards found during grading (7008 & 1705.6).
20. Prior to pouring concrete, a representative of the consulting soils engineer shall inspect and approve the footing excavations. The representative shall post a notice on the job site for the LADBS Inspector and the Contractor stating that the work inspected meets the conditions of the report. No concrete shall be poured until the LADBS Inspector has also inspected and approved the footing excavations. A written certification to this effect shall be filed with the Grading Division of the Department upon completion of the work. (108.9 & 7008.2)
21. Prior to excavation an initial inspection shall be called with the LADBS Inspector. During the initial inspection, the sequence of construction; protection fences; and, dust and traffic control will be scheduled (108.9.1).
22. Prior to the placing of compacted fill, a representative of the soils engineer shall inspect and approve the bottom excavations. The representative shall post a notice on the job site for the LADBS Inspector and the Contractor stating that the soil inspected meets the conditions of the report. No fill shall be placed until the LADBS Inspector has also inspected and approved the bottom excavations. A written certification to this effect shall be included in the final compaction report filed with the Grading Division of the Department. All fill shall be placed under the inspection and approval of the soils engineer. A compaction report together with the approved soil report and Department approval letter shall be submitted to the Grading Division of the Department upon completion of the compaction. In addition, an

Engineer's Certificate of Compliance with the legal description as indicated in the grading permit and the permit number shall be included (7011.3).

23. No footing/slab shall be poured until the compaction report is submitted and approved by the Grading Division of the Department.
24. The infiltration facility design and construction shall comply with the minimum requirements specified in the Information Bulletin P/BC 2014-118.
25. The infiltration system shall be constructed at the location shown on the drawing attached to the current report.
26. The construction of the infiltration system shall be provided under the inspection and approval of the soils engineer.
27. An overflow outlet shall be provided to conduct water to the street in the event that the infiltration system capacity is exceeded. (P/BC 2014-118)
28. Approval for the proposed infiltration system from the Bureau of Sanitation, Department of Public Works shall be secured.
29. A minimum distance of 10 feet (in any direction) shall be provided from adjacent proposed/existing footings to the discharge of the proposed infiltration system. A minimum distance of 10 feet horizontally shall be provided from private property lines to the proposed infiltration system.

ALAN DANG
Structural Engineering Associate II

AD/ad
Log No. 90285-01R
213-482-0480

cc: Geotechnical Engineering, Project Consultant
VN District Office

1 SOILS APPROVAL LETTER
NOT TO SCALE

ULARA

ULARA WATERMASTER

UPPER LOS ANGELES RIVER AREA WATERMASTER
Richard C. Slade – Watermaster

ulawatermaster.com

14051 Burbank Blvd, Suite 300
Sherman Oaks, CA 91401

818-506-0418 PHONE
818-506-1343 FAX

January 4, 2019

Autumn Waggoner
VCA Engineers, Inc.
(Sent via email: autumn.waggoner@vcaeng.com)

Job No. 500-LAS04

Re: Updated Watermaster's Opinion Regarding
Potential Stormwater Infiltration Project
Proposed Public Redevelopment Project
12621 Rye Street
Studio City, California 91604

Ref: Potential Stormwater Infiltration Project
Proposed Public Redevelopment Project
12621 Rye Street
Studio City, California 91604
Letter previously prepared by the ULARA Watermaster, dated November 27, 2018

Dear Ms. Waggoner:

Provided herein is a brief discussion of the information and reports that you have recently provided our office regarding your updated plans for the possible infiltration of stormwater that is to be collected and incorporated into the Low Impact Development (LID) improvements for the proposed public redevelopment project at 12621 Rye Street, in the Studio City area of the City of Los Angeles (City). Your office previously submitted an initial LID Stormwater Infiltration project document to our office for this site on November 8, 2018, and an approval letter response from our office, as referenced above, was sent to you on November 27, 2018; a copy of that letter is attached hereto. Site specific details of the surrounding area, and a brief summary of the nearby potentially contaminating activities (PCAs), can be found in that letter.

The initially proposed redevelopment described above has been updated by the project engineer from the initial LID project to include: changes to the infiltration system design; and the proposed locations for the redevelopment at the subject property. We understand the updated redevelopment project will be constructed in the southwestern and southeastern portions of the subject property.

For this proposed updated redevelopment, you sent the following for Watermaster review:

a. An email, received by the Watermaster's office on December 24, 2018, in response to the Watermaster's Data Request Memorandum (a copy of that Memorandum is provided to LID applicants upon their initial visit to the City of Los Angeles, Department of Public Works, Bureau of Sanitation – Watershed Protection Division (LAWPD) office in downtown Los Angeles). Your email and attachments provided responses to most of the items identified in the Watermaster's Memorandum.

b. A set of CAD-type drawings, prepared by VCA Engineers, Inc. (VCA), which contained: site control plans; grading plans; utility plans, and; miscellaneous details plans. The utility plans show the proposed updated locations of some trench drains, several catch basins, and two dry wells within the boundaries of the project. We understand that these proposed facilities are to be components of your updated stormwater infiltration system.

c. A soils report, *Geotechnical Engineering Report: Studio City Gym*, prepared by the City of Los Angeles Department of Public Works, Bureau of Engineering, Geotechnical Engineering Group, and dated August 12, 2015. The soils report described the earth materials encountered beneath the subject site in five soil borings drilled and sampled to maximum depths of approximately 81.5 feet below ground surface (bgs). It should be noted that groundwater was encountered during drilling of the soil borings at approximately 66 feet bgs. Infiltration rates for the onsite earth materials were tested to a depth of approximately 10 feet bgs in five soil borings drilled for the infiltration test.

Please note that no one from my office conducted a site visit to the subject LID property and that the information presented in this review was provided by the applicant and/or obtained from a cursory review of a few regulatory agency websites and basic sources of referenced information. Among the key items noted during our review of the available updated documents are the following:

1. The subject property development is situated at the northwest corner of the intersection of Beeman Avenue and Rye Street. A Google Earth Pro® satellite image dated December 3, 2017 shows the property was developed as a public recreational facility with one building at that time.
2. The subject property is bordered by the following: Milbank Street to the north; Beeman Avenue to the east; Rye Street to the south, and; residential properties to the west.
3. A check of the online Geotracker database maintained by the California State Water Resources Control Board (SWRCB) shows that within 1,000 feet of the subject LID project, there are: no "open" leaking underground storage tank (LUST) sites; no "open" California Department of Toxic Substances Control (DTSC) sites; no "open" military cleanup sites, or; no "open" cleanup program sites.
4. As shown in the utility plans provided by VCA, stormwater will be collected from rainfall that flows as sheet flow across non-permeable paved areas at the property, and from rain that falls directly onto the roof of the proposed development. The collected stormwater will be directed to one of two trench drains and/or one of several catch basins, which will then direct the stormwater to one of two stormwater holding chambers. Stormwater will ultimately be directed to one of two dry wells (i.e., the infiltration system).

The dry wells are proposed to be constructed to a depth of approximately 45 feet bgs Stormwater directed to the infiltration system would reportedly be able to infiltrate into the subsurface (i.e., made available for deep percolation). The proposed infiltration system is to be constructed in the southwestern and southeastern portions of the proposed public redevelopment project.

Again, it should be noted that the purpose of this LID stormwater infiltration review letter from the Watermaster's office is not in any way to evaluate and/or opine on the technical feasibility of the infiltration of stormwater at the site, but rather only to assess the concept of infiltration (and recharge) at the site strictly in regard to its potential impact on local groundwater quality. Thus, the Watermaster has no opinion regarding the potential for, or the technical feasibility of, the collected stormwater to be infiltrated into the earth materials beneath the subject property.

Further, your eventual LID permit from the LAWPD will require the property owner (and all successors) to provide for ongoing operation and maintenance in perpetuity for all of the onsite LID facilities. The Watermaster considers this issue of ongoing maintenance of your proposed LID facilities to be critical to the long-term protection of the groundwater quality in the San Fernando Basin.

Based on our review of the new documents you provided, and assuming that the updated final stormwater collection system and infiltration systems are constructed as proposed and properly maintained in the future, then the Watermaster has no objection to the infiltration component of your current (latest) LID, in relation to the local groundwater quality. If the project and/or your LID and/or your infiltration system is revised again in the future and differs from that which has been generally characterized herein, the Watermaster would then need to review those revised plans.

Respectfully submitted,

Richard C. Slade
ULARA Watermaster

BUREAU OF ENGINEERING
OFFICIAL RECORD

1 WATERMASTER APPROVAL LETTER
NOT TO SCALE

THE CITY OF LOS ANGELES OR ITS OFFICERS OR AGENTS SHALL NOT BE RESPONSIBLE FOR THE ACCURACY OR COMPLETENESS OF ELECTRONIC COPIES OF THIS PLAN SHEET.

FILE PATH: A360://Studio City Recreation Center/SCRC-Project Model_Central_Final.rvt

TTLB TEMPLATE REVISION DATE: 09/25/17
SHEET ISSUE

REVISION DATES (DESIGN STAGE ONLY)

BUREAU OF ENGINEERING
ENGINEERING
CITY OF LOS ANGELES

NO.	REVISION DESCRIPTION	DATE	BY

BUILDING NO. -
INDEX NO. RP-300106

PROFESSIONAL ENGINEER – CIVIL – STATE OF CALIFORNIA – No. C36079 – Exp. 6/30/20

DEPARTMENT OF PUBLIC WORKS
CITY OF LOS ANGELES

CITY ENGINEER	DATE:
TED ALLEN, PE	1-24-2019
ARCHITECTURAL DIVISION	1-24-2019
LIC. NO. C36079	1-24-2019
ENGINEER: VIRGILIO AOANAN	1-24-2019
DESIGNED BY: VIRGILIO AOANAN	1-24-2019
DRAWN BY: A.WAGGONER	1-24-2019
CHECKED BY: VIRGILIO AOANAN	1-24-2019
APPROVED BY:MAHMOOD KARIMZADEH, AIA, DEPUTY CITY ENGINEER	1-24-2019

CLIENT: DEPARTMENT OF RECREATION AND PARKS
GENERAL MANAGER: MICHAEL A. SHULL

SHEET TITLE: MISCELLANEOUS DETAILS

PROJECT: STUDIO CITY GYMNASIUM

ADDRESS: 12621 RYE STREET, STUDIO CITY, CA 91604

VCA ENGINEERS, INC.
2151 S. Barrington Avenue, Suite 203, Los Angeles, CA 90064
tel: 310.729.0488 | fax: 310.729.0427

WORK ORDER E170267B
PLAN FILE 860
DRAWING C506
SHEET 50 OF SHEETS 211

PLOTTED: 7/1/2019 11:34:04 AM

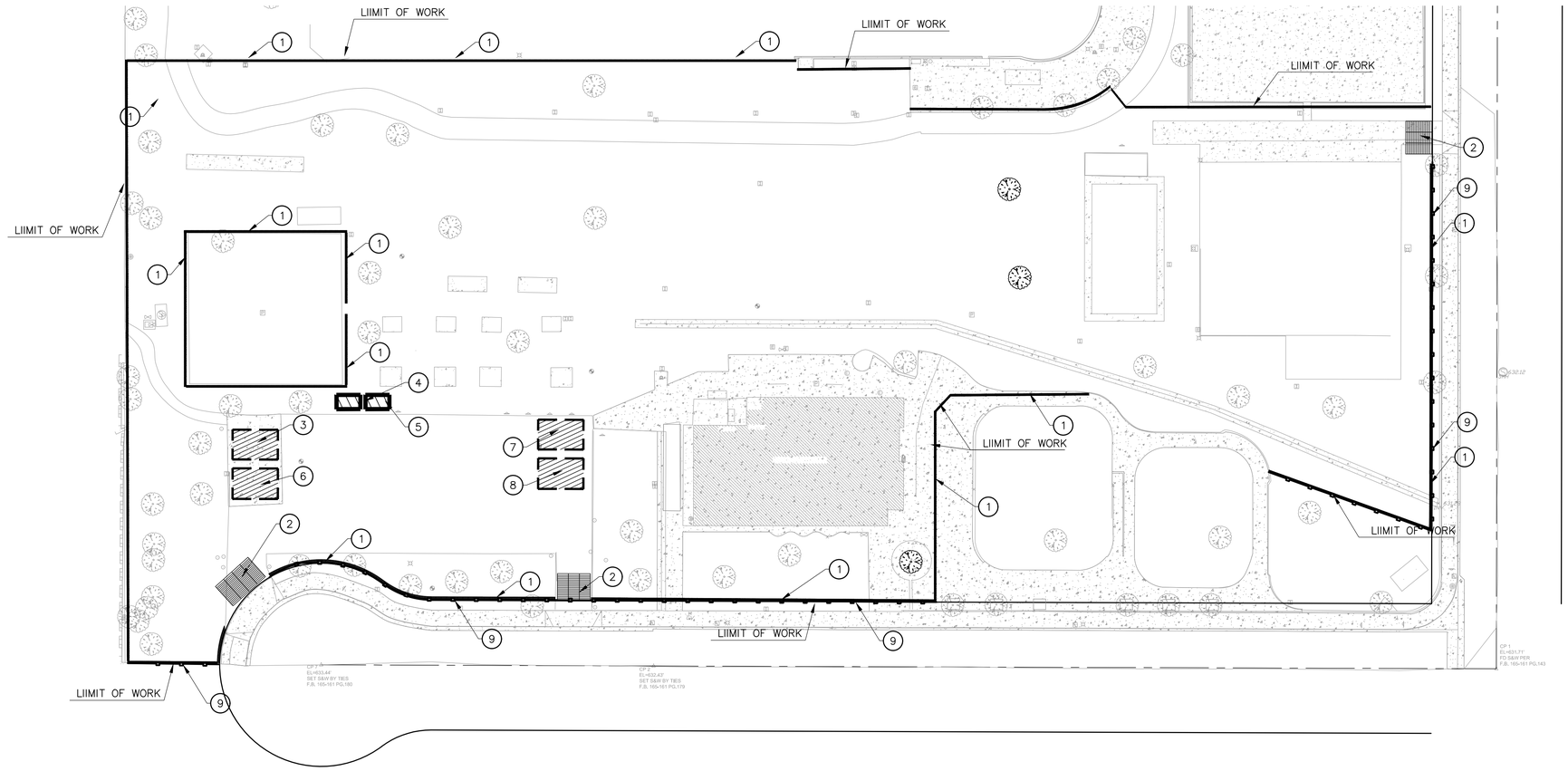

EROSION CONTROL NOTES:

1. INSTALL FIBER ROLLS PER DETAIL 4 ON SHEET C601.
2. INSTALL TEMPORARY STABILIZED CONSTRUCTION ENTRANCE PER DETAIL 6 ON SHEET C601.
3. PROPOSED AREA FOR EQUIPMENT STAGING. CONTRACTOR TO VERIFY EXACT LOCATION AND COORDINATE WITH THE CITY ENGINEER.
4. TRAILER AREA VERIFY EXACT LOCATION AND COORDINATE WITH THE CITY ENGINEER.
5. PROPOSED AREA FOR PORTABLE TOILETS. CONTRACTOR TO VERIFY EXACT LOCATION AND COORDINATE WITH THE CITY ENGINEER.
6. PROPOSED AREA FOR LOADING. CONTRACTOR TO VERIFY EXACT LOCATION AND COORDINATE WITH THE CITY ENGINEER.
7. PROPOSED AREA FOR VEHICLE AND EQUIPMENT CLEANING. CONTRACTOR TO VERIFY EXACT LOCATION AND COORDINATE WITH THE CITY ENGINEER.
8. PROPOSED AREA FOR TIRE WASH. CONTRACTOR TO VERIFY EXACT LOCATION AND COORDINATE WITH THE CITY ENGINEER.
9. SILT FENCE PER DETAIL 5 ON SHEET C601.

EROSION CONTROL

EC1 – SCHEDULING
EC2 – PRESERVATION OF EXISTING VEGETATION
EC3 – HYDRAULIC MULCH
EC4 – HYDROSEEDING
EC5 – SOIL BINDERS
EC6 – STRAW MULCH
EC7 – GEOTEXTILES AND MATS
EC8 – WOOD MULCHING
EC9 – EARTH DIKES AND DRAINAGE SWALES
EC10 – VELOCITY DISSIPATION DEVICES
EC11 – SLOPE DRAINS
EC12 – STREAMBANK STABILIZATION
EC13 – POLYACRYLAMIDE

TEMPORARY SEDIMENT CONTROL

SE1 – SILT FENCE
SE2 – SEDIMENT BASIN
SE3 – SEDIMENT TRAP
SE4 – CHECK DAM
SE5 – FIBER ROLLS
SE6 – GRAVEL BAG BERM
SE7 – STREET SWEEPING AND VACUUMING
SE8 – SANDBAG BARRIER
SE9 – STRAW BALE BARRIER
SE10 – STORM DRAIN INLET PROTECTION

WIND EROSION CONTROL

WE1 – WIND EROSION CONTROL

EQUIPMENT TRACKING CONTROL

TC1 – STABILIZED CONSTRUCTION ENTRANCE EXIT
TC2 – STABILIZED CONSTRUCTION ROADWAY
TC3 – ENTRANCE/OUTLET TIRE WASH

NON–STORMWATER MANAGEMENT

NS1 – WATER CONSERVATION PRACTICES
NS2 – DEWATERING OPERATIONS
NS3 – PAVING AND GRINDING OPERATIONS
NS4 – TEMPORARY STREAM CROSSING
NS5 – CLEARWATER DIVERSION
NS6 – ILLICIT CONNECTION/DISCHARGE
NS7 – POTABLE WATER/IRRIGATION
NS8 – VEHICLE AND EQUIPMENT CLEANING
NS9 – VEHICLE AND EQUIPMENT FUELING
NS10 – VEHICLE AND EQUIPMENT MAINTENANCE
NS11 – PILE DRIVING OPERATIONS
NS12 – CONCRETE CURING
NS13 – CONCRETE FINISHING
NS14 – MATERIAL AND EQUIPMENT USE
NS15 – DEMOLITION ADJACENT TO WATER
NS16 – TEMPORARY BATCH PLANTS

WASTE MANAGEMENT & MATERIAL POLLUTION CONTROL

WM1 – MATERIAL DELIVERY AND STORAGE
WM2 – MATERIAL USE
WM3 – STOCKPILE MANAGEMENT
WM4 – SPILL PREVENTION AND CONTROL
WM5 – SOLID WASTE MANAGEMENT
WM6 – HAZARDOUS WASTE MANAGEMENT
WM7 – CONTAMINATION SOIL MANAGEMENT
WM8 – CONCRETE WASTE MANAGEMENT
WM9 – SANITARY/SEPTIC WASTE MANAGEMENT
WM10 – LIQUID WASTE MANAGEMENT

GENERAL NOTES:

1. IN CASE OF EMERGENCY, CALL 911.
2. TOTAL DISTURBED AREA _____ WDID# _____
3. RISK LEVEL 1 2 3 (CIRCLE ONE AS DETERMINED BY STATE GENERAL PERMIT FOR SITES GREATER THAN 1 ACRE)
4. A STAND–BY CREW FOR EMERGENCY WORK SHALL BE AVAILABLE AT ALL TIMES DURING THE RAINY SEASON (NOVEMBER 1 TO APRIL 15). NECESSARY MATERIALS SHALL BE AVAILABLE ON–SITE AND STOCKPILED AT CONVENIENT LOCATIONS TO FACILITATE RAPID CONSTRUCTION OF EMERGENCY DEVICES WHEN RAIN IS IMMINENT.
5. EROSION CONTROL DEVICES SHOWN ON THIS PLAN MAY BE REMOVED WHEN APPROVED BY THE BUILDING OFFICIAL IF THE GRADING OPERATION HAS PROGRESSED TO THE POINT WHERE THEY ARE NO LONGER REQUIRED.
6. GRADED AREAS ADJACENT TO FILL SLOPES LOCATED AT THE SITE PERIMETER MUST DRAIN AWAY FROM THE TOP OF SLOPE AT THE CONCLUSION OF EACH WORKING DAY. ALL LOOSE SOILS AND DEBRIS THAT MAY CREATE A POTENTIAL HAZARD TO OFF–SITE PROPERTY SHALL BE STABILIZED OR REMOVED FROM THE SITE ON A DAILY BASIS.
7. ALL SILT AND DEBRIS SHALL BE REMOVED FROM ALL DEVICES WITHIN 24 HOURS AFTER EACH RAINSTORM AND BE DISPOSED OF PROPERLY.
8. A GUARD SHALL BE POSTED ON SITE WHEREVER THE DEPTH OF WATER IN ANY DEVICE EXCEEDS TWO FEET. THE DEVICE SHALL BE DRAINED OR PUMPED DRY WITHIN 24 HOURS AFTER EACH RAINSTORM. PUMPING AND DRAINING OF ALL BASINS AND DRAINAGE DEVICES MUST COMPLY WITH THE APPROPRIATE BMP FOR DEWATERING OPERATIONS.
9. THE PLACEMENT OF ADDITIONAL DEVICES TO REDUCE EROSION DAMAGE AND CONTAIN POLLUTANTS WITHIN THE SITE IS LEFT TO THE DISCRETION OF THE FIELD ENGINEER. ADDITIONAL DEVICES AS NEEDED SHALL BE INSTALLED TO RETAIN SEDIMENTS AND OTHER POLLUTANTS ON SITE.
10. DESILTING BASINS MAY NOT BE REMOVED OR MADE INOPERABLE BETWEEN NOVEMBER 1 AND APRIL 15 OF THE FOLLOWING YEAR WITHOUT THE APPROVAL OF THE BUILDING OFFICIAL.
11. STORM WATER POLLUTION AND EROSION CONTROL DEVICES ARE TO BE MODIFIED, AS NEEDED, AS THE PROJECT PROGRESSES, THE DESIGN AND PLACEMENT OF THESE DEVICES IS THE RESPONSIBILITY OF THE FIELD ENGINEER. PLANS REPRESENTING CHANGES MUST BE SUBMITTED FOR APPROVAL IF REQUESTED BY THE BUILDING OFFICIAL.

GENERAL NOTES CONT:

12. EVERY EFFORT MUST BE MADE TO ELIMINATE THE DISCHARGE OF NON–STORM WATER FROM THE PROJECT SITES AT ALL TIMES.
13. ERODED SEDIMENTS AND OTHER POLLUTANTS MUST BE RETAINED ON–SITE AND MAY NOT BE TRANSPORTED FROM THE SITE VIA SHEET FLOW, SWALES, AREA DRAINS, NATURAL DRAINAGE COURSES, OR WIND.
14. STOCKPILES OF EARTH AND OTHER CONSTRUCTION–RELATED MATERIALS MUST BE PROTECTED FROM BEING TRANSPORTED FROM THE SITE BY THE FORCES OF WIND OR WATER.
15. FUELS, OILS, SOLVENTS, AND OTHER TOXIC MATERIALS MUST BE STORED IN ACCORDANCE WITH THEIR LISTINGS AND ARE NOT TO CONTAMINATE THE SOILS AND SURFACE WATERS. ALL APPROVED STORAGE CONTAINERS ARE TO BE PROTECTED FROM THE WEATHER. SPILLS MUST BE CLEANED UP IMMEDIATELY AND DISPOSED OF IN A PROPER MANNER. SPILLS MAY NOT BE WASHED INTO THE DRAINAGE SYSTEM.
16. EXCESS OR WASTE CONCRETE MAY NOT BE WASTED INTO THE PUBLIC WAY OR ANY OTHER DRAINAGE SYSTEM. PROVISIONS SHALL BE MADE TO RETAIN CONCRETE WASTES ON–SITE UNTIL THEY CAN BE DISPOSED OF AS SOLID WASTE.
17. DEVELOPERS/CONTRACTORS ARE RESPONSIBLE TO INSPECT ALL EROSION CONTROL DEVICES AND BMP's ARE INSTALLED AND FUNCTIONING PROPERLY IF THERE IS A 50% OR GREATER PROBABILITY OF PREDICTED PRECIPITATION, AND AFTER ACTUAL PRECIPITATION. A CONSTRUCTION SITE INSPECTION CHECKLIST AND INSPECTION LOG SHALL BE MAINTAINED AT THE PROJECT SITE AT ALL TIMES AND AVAILABLE FOR REVIEW BY THE BUILDING OFFICIAL (COPIES OF SELF–INSPECTION CHECKLIST AND INSPECTION LOGS ARE AVAILABLE UPON REQUEST).
18. TRASH AND CONSTRUCTION–RELATED SOLID WASTES MUST BE DEPOSITED INTO A COVERED RECEPTACLE TO PREVENT CONTAMINATION OF RAINWATER AND DISPERSAL BY WIND.
19. SEDIMENTS AND OTHER MATERIALS MAY NOT BE TRACKED FROM THE SITE BY VEHICLE TRAFFIC. THE CONSTRUCTION ENTRANCE ROADWAYS MUST BE STABILIZED SO AS TO INHIBIT SEDIMENTS FROM BEING DEPOSITED INTO THE PUBLIC WAY. ACCIDENTAL DEPOSITIONS MUST BE SWEPT UP IMMEDIATELY AND MAY NOT BE WASHED DOWN BY RAIN OR OTHER MEANS.
20. ANY SLOPES WITH DISTURBED SOILS OR DENUDED OF VEGETATION MUST BE STABILIZED SO AS TO INHIBIT EROSION BY WIND AND WATER.
21. DEVELOPERS/CONTRACTORS ARE RESPONSIBLE TO INSPECT ALL EROSION CONTROL DEVICES AND BMPs ARE INSTALLED AND FUNCTIONING PROPERLY AS REQUIRED BY THE STATE CONSTRUCTION GENERAL PERMIT. A CONSTRUCTION SITE INSPECTION CHECKLIST AND INSPECTION LOG SHALL BE MAINTAINED AT THE PROJECT SITE AT ALL TIMES AND AVAILABLE FOR REVIEW BY THE BUILDING OFFICIAL.

OWNER STATEMENT OF UNDERSTANDING:

AS THE ENGINEER/QSD OF RECORD, I HAVE SELECTED APPROPRIATE BMPs TO EFFECTIVELY MINIMIZE THE NEGATIVE IMPACTS OF THIS PROJECT'S CONSTRUCTION ACTIVITIES ON STORM WATER QUALITY. THE PROJECT OWNER AND CONTRACTOR ARE AWARE THAT THE SELECTED BMPs MUST BE INSTALLED, MONITORED, AND MAINTAINED TO ENSURE THEIR EFFECTIVENESS.

_____ _____
CIVIL ENGINEER/QSD SIGNATURE DATE

AS THE PROJECT OWNER OR AUTHORIZED AGENT OF THE OWNER, "I CERTIFY THAT THIS DOCUMENT AND ALL ATTACHMENTS WERE PREPARED UNDER MY DIRECTION OR SUPERVISION IN ACCORDANCE WITH THE SYSTEM DESIGNED TO ENSURE THAT A QUALIFIED PERSONNEL PROPERLY GATHER AND EVALUATE THE INFORMATION SUBMITTED. BASED ON MY INQUIRY OF THE PERSON OR PERSONS WHO MANAGE THE SYSTEM OR THOSE PERSONS DIRECTLY RESPONSIBLE FOR GATHERING THE INFORMATION, TO THE BEST OF MY KNOWLEDGE AND BELIEF, THE INFORMATION SUBMITTED IS TRUE, ACCURATE, AND COMPLETE. I AM AWARE THAT SUBMITTING FALSE AND/ OR INACCURATE INFORMATION, FAILING TO UPDATE THE ESCP TO REFLECT THE CURRENT CONDITIONS, OR FAILING TO PROPERLY AND/OR ADEQUATELY IMPLEMENT THE ESCP MAY RESULT IN REVOCATION OF GRADING AND/OR OTHER PERMITS OR OTHER SANCTIONS PROVIDED BY LAW."

_____ _____
OWNER OR AUTHORIZED REPRESENTATIVE (PERMITEE) DATE

BUREAU OF ENGINEERING
OFFICIAL RECORD

EROSION CONTROL PLAN

30 15 0 30 60
SCALE: 1" = 30'

THE CITY OF LOS ANGELES OR ITS OFFICERS OR AGENTS SHALL NOT BE RESPONSIBLE FOR THE ACCURACY OR COMPLETENESS OF ELECTRONIC COPIES OF THIS PLAN SHEET.

FILE PATH: A360://Studio City Recreation Center/SCRC-Project Model_Central_Final.rvt

TTLB TEMPLATE REVISION DATE: 09/25/17
SHEET ISSUE

REVISION DATES (DESIGN STAGE ONLY)

BUREAU OF ENGINEERING
CITY OF LOS ANGELES
ENGINEERING

NO.	REVISION DESCRIPTION	DATE	BY

BUILDING NO. -
INDEX NO. RP-300106

PROFESSIONAL ENGINEER – CIVIL – STATE OF CALIFORNIA – TED ALLEN – No. C38079 – Exp. 6/30/20

DEPARTMENT OF PUBLIC WORKS
CITY OF LOS ANGELES

CITY ENGINEER	DATE:
ARCHITECTURAL DIVISION	1-24-2019
ENGINEER: VIRGILIO AOANAN	1-24-2019
DESIGNED BY: VIRGILIO AOANAN	1-24-2019
DRAWN BY: A.WAGGONER	1-24-2019
CHECKED BY: VIRGILIO AOANAN	1-24-2019
APPROVED BY:MAHMOOD KARIMZADEH, AIA, DEPUTY CITY ENGINEER	1-24-2019

TED ALLEN, PE LIC. NO.: C38079

CLIENT: DEPARTMENT OF RECREATION AND PARKS
GENERAL MANAGER: MICHAEL A. SHULL

SHEET TITLE: EROSION CONTROL PLAN
PROJECT: STUDIO CITY GYMNASIUM
ADDRESS: 12621 RYE STREET, STUDIO CITY, CA 91604

MCA ENGINEERS, INC. 3414 S. Sunset Avenue, Suite 200, Alhambra, CA 91803 Tel: 323.735.6566 Fax: 323.735.6567

WORK ORDER E170267B
PLAN FILE 860
DRAWING C600
SHEET 51 OF SHEETS 211

PLOTTED: 7/1/2019 11:34:04 AM

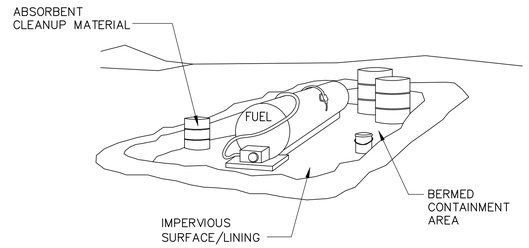

NOTE:

FUELING SHALL BE PERFORMED IN A DESIGNATED AREA, AWAY FROM COURSES. ABSORBENT CLEANUP MATERIAL SHALL BE ON SITE AND USED IMMEDIATELY IN THE EVENT OF A SPILL.

1 VEHICLE / EQUIPMENT FUELING

SCALE: NOT TO SCALE

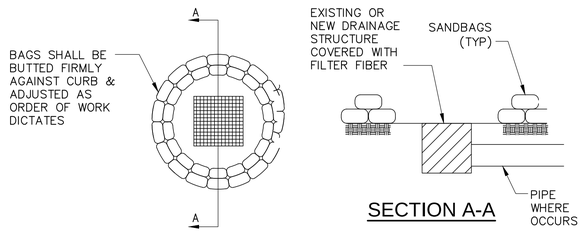

SECTION A-A

2 GRAVEL BAG CHECKDAM

SCALE: NOT TO SCALE

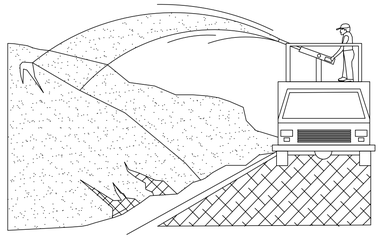

NOTES:

1. SOIL/SLOPE STABILIZATION PRACTICES SHALL BE DESIGNED TO PRESERVE EXISTING VEGETATION WHERE FEASIBLE AND TO REVEGETATE OPEN AREAS AS SOON AS FEASIBLE AFTER GRADING. THESE CONTROL PRACTICES SHALL INCLUDE TEMPORARY SEEDING, PERMANENT SEEDING, MULCHING, SOD STABILIZATION, VEGETATIVE BUFFER STRIPS, PROTECTION OF TREES, OR OTHER SOIL STABILIZATION PRACTICES.
2. SOIL STABILIZATION SHALL BE IMPLEMENTED ON ALL INACTIVE DISTURBED AREAS FROM NOVEMBER 1 THRU APRIL 15 AND ON ALL DISTURBED AREAS DURING A RAIN EVENT OR POTENTIAL RAIN.
3. STABILIZATION PRACTICES SHALL CONTROL/PREVENT EROSION FROM THE FORCES OF WIND AND WATER.
4. STABILIZATION PRACTICES SHALL BE IMPLEMENTED IN CONJUNCTION WITH SEDIMENT TRAPPING/FILTERING PRACTICES AND PRACTICES TO REDUCE THE TRACKING OF SEDIMENT ONTO PAVED ROADS.
5. WHEN USING STRAW MULCHING, THE MINIMUM APPLICATION SHALL BE 2 TONS/ACRE. MULCH MUST BE ANCHORED IMMEDIATELY TO MINIMIZE LOSS BY WIND OR WATER.
6. WHEN USING HYDROSEEDING/MULCHING, THE MINIMUM APPLICATION OF WOOD FIBER SHALL BE 1,500 LBS/ACRE, THAT DOES NOT CONTAIN MORE THAN 50 PERCENT NEWSPRINT.
7. FOR SEEDING RECOMMENDATIONS, USDA, NATURAL RESOURCES CONSERVATION SERVICE.

3 EROSION CONTROL

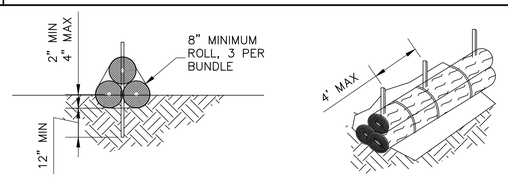

4 FIBER ROLL DETAIL

SCALE: NOT TO SCALE

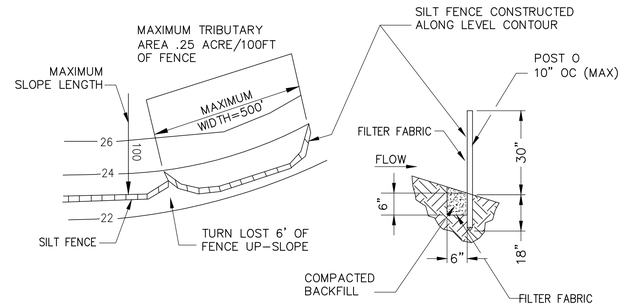

NOTES:

1. CONSTRUCT THE SILT FENCE ALONG A LEVEL CONTOUR.
2. SILT FENCES SHALL REMAIN IN PLACE UNTIL THE DISTURBED AREA IS PERMANENTLY STABILIZED.
3. PROVIDE SUFFICIENT ROOM FOR RUNOFF TO POND BEHIND THE FENCE AND ALLOW SEDIMENT REMOVAL EQUIPMENT TO PASS BETWEEN THE SILT FENCE AND TOE OF SLOPE OR OTHER OBSTRUCTIONS. ABOUT 1200 SQ. FT. OF PONDING AREA SHALL BE PROVIDED FOR EVERY ACRE DRAINING TO THE FENCE.
4. TURN THE ENDS OF THE FILTER FENCE UPHILL TO PREVENT STORMWATER FROM FLOWING AROUND THE FENCE.
5. LEAVE AN UNDISTURBED OR STABILIZED AREA IMMEDIATELY DOWNSLOPE FROM THE FENCE.
6. DO NOT PLACE IN LIVE STREAM OR INTERMITTENTLY FLOWING CHANNELS.
7. WHEN STANDARD FILTER FABRIC IS USED, A WIRE MESH SUPPORT FENCE SHALL BE FASTENED SECURELY TO THE UPSLOPE SIDE OF THE POSTS USING HEAVY-DUTY WIRE STAPLES AT LEAST 1 INCH LONG. TIE WIRES OR HOG RINGS.

5 CATCH BASIN/INLET PROTECTION

SCALE: NOT TO SCALE

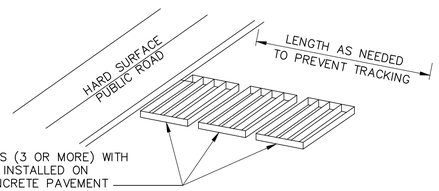

NOTES:

1. SEDIMENTS AND OTHER MATERIALS SHALL NOT BE TRACKED FROM THE SITE BY VEHICLE TRAFFIC. THE CONSTRUCTION ENTRANCE ROADWAYS SHALL BE STABILIZED SO AS TO PREVENT SEDIMENTS FROM BEING DEPOSITED INTO THE PUBLIC ROADS. DEPOSITIONS MUST BE SWEPT UP IMMEDIATELY AND MAY NOT BE WASHED DOWN BY RAIN OR OTHER MEANS INTO THE STORM DRAIN SYSTEM.
2. STABILIZED CONSTRUCTION ENTRANCE SHALL BE:

   A. LOCATED AT ANY POINT WHERE TRAFFIC WILL BE ENTERING OR LEAVING A CONSTRUCTION SITE RD OR FROM A PUBLIC RIGHT OF WAY, STREET, ALLEY, AND SIDEWALK OR PARKING AREA.

   B. A SERIES OF STEEL PLATES WITH "RUMBLE STRIPS", AND/OR MIN 4" COARSE AGGREGATE WITH LENGTH, WIDTH & THICKNESS AS NEEDED TO ADEQUATELY PREVENT ANY TRACKING ONTO PAVED SURFACES.

3. ADDING A WASH RACK WITH A SEDIMENT TRAP LARGE ENOUGH TO COLLECT ALL WASH WATER CAN GREATLY IMPROVE EFFICIENCY.
4. ALL VEHICLES ACCESSING THE CONSTRUCTION SITE SHALL UTILIZE THE STABILIZED CONSTRUCTION ENTRANCE SITES.

STREET MAINTENANCE

1. REMOVE ALL SEDIMENT DEPOSITED ON PAVED ROADWAYS IMMEDIATELY.
2. SWEEP PAVED AREAS THAT RECEIVE CONSTRUCTION TRAFFIC WHENEVER SEDIMENT BECOMES VISIBLE.
3. PAVEMENT WASHING WITH WATER IS PROHIBITED IF IT RESULTS IN A DISCHARGE TO THE STORM DRAIN SYSTEM.

6 STABILIZED CONSTRUCTION ENTRANCE / EXIT

NOT TO SCALE

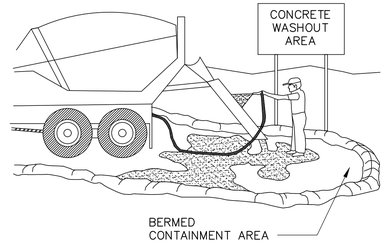

NOTES:

1. EXCESS AND WASTE CONCRETE SHALL NOT BE WASHED INTO STREET OR A DRAINAGE SYSTEM
2. FOR WASHOUT OF CONCRETE AND MORTAR PRODUCTS, A DESIGNATED CONTAINMENT FACILITY OF SUFFICIENT CAPACITY TO RETAIN LIQUID AND SOLID WASTE SHALL PROVIDED ON SITE.
3. SLURRY FROM CONCRETE AND ASPHALT SAW CUTTING SHALL BE VACUUMED OR CONTAINED,DRIED, PICKED UP AND DISPOSED OFF PROPERTY.

7 CONCRETE WASTE MANAGEMENT

SCALE: NOT TO SCALE

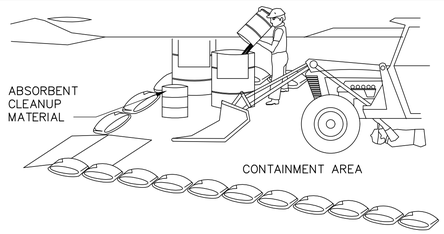

NOTES:

1. LEAKING VEHICLES AND EQUIPMENT SHALL NOT BE ALLOWED ON-SITE. EQUIPMENT AND VEHICLES SHALL BE INSPECTED FREQUENTLY FOR LEAKS AND SHALL BE REPAIRED IMMEDIATELY. CLEAN UP SPILLS AND LEAKS PROMPTLY WITH ABSORBENT; DO NOT FLUSH WITH WATER.
2. VEHICLES AND EQUIPMENT SHALL BE MAINTAINED AND REPAIRED ON-SITE ONLY IN DESIGNATED AREAS. PREVENT RUN-ON AND RUN-OFF FROM DESIGNATED AREAS. CONTAINMENT DEVICES SHALL BE PROVIDED AND AREAS SHALL BE COVERED IF NECESSARY.
3. DESIGNATE ON-SITE VEHICLE AND EQUIPMENT MAINTENANCE AREAS, WAY FROM STORM DRAIN INLETS AND WATERCOURSES.
4. ALWAYS USE SECONDARY CONTAINMENT, SUCH AS A DRAIN PAN OR DROP CLOTH, TO CATCH SPILLS AND LEAKS WHEN REMOVING OR CHANGING FLUIDS.
5. LEGALLY DISPOSE OF USED OILS, FLUIDS, AND LUBRICANTS.
6. PROVIDE SPILL CONTAINMENT DIKES OR SECONDARY CONTAINMENT AROUND STORED OIL, FUEL, AND CHEMICAL DRUMS.
7. MAINTAIN ON ADEQUATE SUPPLY OF ABSORBENT SPILL CLEANUP MATERIALS IN DESIGNATED AREA.

8 EQUIPMENT REPAIR/MAINTENANCE

SCALE: NOT TO SCALE

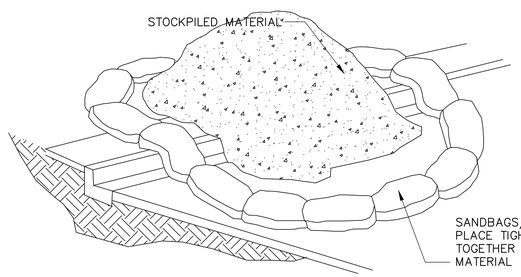

BUREAU OF ENGINEERING
OFFICIAL RECORD

NOTES:

1. DIRT AND OTHER CONSTRUCTION RELATED MATERIALS PLACED IN THE STREET OR ON OTHER IMPERVIOUS SURFACES MUST BE CONTAINED WITH SANDBAGS OR OTHER MEASURES TO PREVENT TRANSPORT TO THE STORMDRAIN SYSTEM.
2. ANY CONSTRUCTION MATERIAL STORED OR STOCKPILED ON-SITE SHALL BE PROTECTED FROM BEING TRANSPORTED BY THE FORCE OF WIND OR WATER.

9 MATERIAL STORAGE

NOT TO SCALE

THE CITY OF LOS ANGELES OR ITS OFFICERS OR AGENT'S SHALL NOT BE RESPONSIBLE FOR THE ACCURACY OR COMPLETENESS OF ELECTRONIC COPIES OF THIS PLAN SHEET.

FILE PATH: A360://Studio City Recreation Center/SCRC-Project Model_Central_Final.rvt

TTLB TEMPLATE REVISION DATE: 09/25/17
SHEET ISSUE

REVISION DATES (DESIGN STAGE ONLY)

BUREAU OF ENGINEERING
DEPARTMENT OF PUBLIC WORKS
CITY OF LOS ANGELES

ENGINEERING
CITY OF LOS ANGELES

NO.	REVISION DESCRIPTION	DATE	BY

BUILDING NO. -

INDEX NO. RP-300106

TED ALLEN, PE — CITY ENGINEER — DATE:

	ARCHITECTURAL DIVISION	LIC. NO.: C36079	DATE:
ENGINEER:	VIRGILIO AOANAN		1-24-2019
DESIGNED BY:	VIRGILIO AOANAN		1-24-2019
DRAWN BY:	A.WAGGONER		1-24-2019
CHECKED BY:	VIRGILIO AOANAN		1-24-2019
APPROVED BY:	MAHMOOD KARIMZADEH, AIA, DEPUTY CITY ENGINEER		1-24-2019

CLIENT: DEPARTMENT OF RECREATION AND PARKS
GENERAL MANAGER: MICHAEL A. SHULL

SHEET TITLE: EROSION CONTROL DETAILS

PROJECT: STUDIO CITY GYMNASIUM

ADDRESS: 12621 RYE STREET, STUDIO CITY, CA 91604

MCA ENGINEERS, INC.
CIVIL, Solid Waste, Traffic, Water Resources, Landscape Architecture
16133 Ventura Blvd., Suite 700, Encino, CA 91436
Tel: 818.788.3651 Fax: 818.788.3652

WORK ORDER E170267B

PLAN FILE 860

DRAWING C601

SHEET 52 OF SHEETS 211

PLOTTED: 7/1/2019 11:34:04 AM

GENERAL DEMOLITION NOTES

1. EXISTING ELEMENTS NOT SHOWN ARE PART OF SCOPE OF WORK.
2. EXISTING GYMNASIUM BUILDING AND ASSOCIATED FOOTINGS/FOUNDATIONS TO BE REMOVED IN THEIR ENTIRETY.
3. MISCELLANEOUS SITE ELEMENTS WITHIN THE WORK AREA, INCLUDING, BUT NOT LIMITED TO, RETAINING WALLS, MOW STRIPS, CURBS, SLABS, ASPHALT PAVING, LIGHT POSTS, FENCES, BENCHES, IRRIGATION, SHADE STRUCTURES AND THEIR ASSOCIATED FOOTINGS ARE TO BE DEMOLISHED AND REMOVED IN THEIR ENTIRETY. DEMOLITION IS NOT TO AFFECT SERVICE TO EXISTING PARK AMENITIES TO REMAIN U.O.N.
4. PARK ELEMENTS ADJACENT TO WORK AREA, INCLUDING BUT NOT LIMITED TO PLAYGROUND AND EQUIPMENT, DRINKING FOUNTAINS, SITE AREA DRAINS, LANDSCAPED AREAS, ETC., ARE TO BE PROTECTED DURING ALL PHASES OF DEMOLITION AND CONSTRUCTION.
5. THE EARTH, EXPOSED DUE TO DEMOLITION OUTLINED IN THESE DOCUMENTS, IS TO BE GRADED ONLY TO MINIMIZE HAZARDOUS CONDITIONS, TO AVOID EROSION AND BE LEFT FOR INSPECTION OF THE OWNER + GEOTECHNICAL ENGINEER.
6. FOR EXISTING BUILDING FOOTPRINT ELEVATIONS, SITE TOPOGRAPHY, LOCATIONS OF UTILITIES, EASEMENTS, PULL BOXES, CLEAN OUTS, ELECTRICAL VAULTS, GAS MAIN, WATER VALVES, METERS, CATCH BASINS, AND LIGHT FIXTURES; REFER TO SURVEY SHEET 1, 2, 3 AND ORIGINAL BUILDING AS-BUILT DRAWINGS.
7. ALL GAS, WATER, SEWER AND STORM DRAIN LINES WHICH SERVE THE FACILITY BEING DEMOLISHED ARE TO BE TURNED OFF AT THE NEAREST METER, VALVE, JUNCTION BOX OR MANHOLE OUT OF THE AREA OF WORK. THE LINES SERVING THE FACILITIES TO BE DEMOLISHED ARE TO BE CUT AND REMOVED BACK TO THE POINT WHERE THEY WERE TURNED OFF U.N.O. SERVICE LINES NO LONGER FUNCTIONING ARE TO BE DEMOLISHED AND REMOVED FROM THE WORK AREA. COORDINATE CUTTING OF LINES WITH THE DEPARTMENT OF RECREATION AND PARKS. CONTACT: XXX XXX, CONSTRUCTION & MAINTENANCE SUPERVISOR, 3900 CHEVY CHASE DR., L.A. CA 90039 (XXX) XXX-XXXX.
8. ELECTRICAL LINES NO LONGER FUNCTIONING ARE TO BE DEMOLISHED AND REMOVED FROM THE WORK AREA.
9. ANY GAS, WATER, SEWER OR STORM DRAIN LINES WHICH CROSS THE WORK AREA BUT CONTINUE TO BE IN SERVICE TO FACILITIES OUTSIDE OF THE WORK AREA ARE TO BE RE-ROUTED. GC TO RECEIVE APPROVAL OF NEW ROUTE FROM THE OWNER BEFORE COMMENCING WITH THE WORK, NEW ROUTING IS TO BE RECORDED ON THE AS-BUILTS.
10. ANY ELECTRICAL LINES WHICH CROSS THE WORK AREA BUT CONTINUE TO BE IN SERVICE TO BUILDINGS/FACILITIES OUTSIDE OF THE WORK AREA ARE TO BE RE-ROUTED. GC TO RECEIVE APPROVAL OF NEW ROUTE FROM THE OWNER BEFORE COMMENCING WITH THE WORK, NEW ROUTING IS TO BE RECORDED ON THE AS-BUILTS.
11. THE CONTRACTOR SHALL ASSUME AND INCLUDE IN HIS BID THAT ALL CONCEALED PIPING IN ABOVE GRADE STRUCTURES TO BE DEMOLISHED AND ALL PIPING UNDERNEATH THE (E) BUILDING SLAB IS TRANSITE (ASBESTOS) PIPING. THE GENERAL CONTRACTOR IS RESPONSIBLE FOR OBTAINING AND FOLLOWING ALL REGULATORY AGENCY GUIDELINES FOR DEMOLITION AND ABATEMENT IN ADDITION TO THE DIRECTION GIVEN IN THE CONSTRUCTION DOCUMENTS AS WELL AS REFLECTING SUCH REMOVAL ON THE CONSTRUCTION SCHEDULE.
12. THE CONTRACTOR SHALL ASSUME THAT ALL (E) EQUIPMENT CONTAINS HAZARDOUS MATERIALS AND SHALL BE DEMOLISHED, REMOVED AND DISPOSED OF PER THE ABATEMENT GUIDELINES CONTAINED IN THESE DOCUMENTS.
13. REMOVED TREES ARE TO BE HAULED FROM SITE. GRIND STUMPS MINIMUM 1'-0" BELOW FINISH GRADE.
14. TREES TO REMAIN ARE TO BE PROTECTED PER SPECIFICATIONS SECTION 0XXXX TREE PROTECTION GUIDELINES.
15. TREES TO BE RELOCATED PER SPECIFICATIONS SECTION 0XXXX TREE PROTECTION GUIDELINES.
16. CONTACT ARBORIST WHERE SPECS REQUIRE AND/OR IF UNFORSEEN CONDITIONS ARISE. ARBORIST: XXXX XXXX (XXX) XXX-XXXX, @lacity.org OR TREE SURGEON SUPERVISOR. XXXX XXXX (XXX) XXX-XXXX, @lacity.org
17. ALL BIDDERS ARE TO INVESTIGATE THE JOB SITE PRIOR TO SUBMITTING BID. ALL DIMENSIONS TO EXISTING ELEMENTS ARE TO BE VERIFIED IN FIELD.
18. PROVIDE CONSTRUCTION FENCE WITH INSIDE OF FENCE VISUAL BARRIER AROUND CONSTRUCTION ZONE. FENCE AND BARRIER ARE TO BE WELL MAINTAINED AND REPAIRED DURING THE ENTIRE COURSE OF CONSTRUCTION. CONSTRUCTION FENCE IS TO BE LEFT IN SERVICEABLE CONDITION AFTER DEMOLITION, FOR PROPERTY SECURITY.
19. MATERIALS IDENTIFIED TO BE HAZARDOUS ON THE LEAD AND ASBESTOS SURVEY DATED XXX. XX, XXXX SHALL BE ABATED PER RECOMENDATIONS OF THE REPORT AND/OR BY CAL/OSHA. HAZARDOUS MATERIALS ARE REPORTED IN A LIMITED FASHION IN THE ASBESTOS AND LEAD SURVEY REPORT DATED XXX. XX, XXXX, HOWEVER THE CONTRACTOR SHALL ASSUME THAT ASBESTOS CONTAINING MATERIALS ARE UNDERGROUND AND CONCEALED WITHIN THE FACILITIES STRUCTURE TO BE DEMOLISHED, THUS, PROPER ABATEMENT SHALL BE EXERCISED IN COMPLIANCE WITH THE GOVERNING REGULATIONS.
20. REFER TO AS-BUILT SHEETS FOR MORE INFO.
21. REFER TO DEMOLITION CIVIL SHEETS C101-C103 FOR MORE DEMOLITION INFO.
22. DIAL BEFORE YOU DIG. 1(800) 422-4133 DIGALERT. AT LEAST 2 WORKING DAYS PRIOR TO EXCAVATING.

ELECTRICAL DEMOLITION NOTES

1. DE-ENERGIZE FEEDERS SERVING THE EXISTING BUILDING AND ADJACENT PARTS SCHEDULED FOR DEMOLITION.
   a. IF THE BUILDING HAS A DEDICATED ELECTRICAL SERVICE, REQUEST TO DE-ENERGIZE THE ELECTRICAL SERVICE BY CONTACTING THE SERVING UTILITY COMPANY.
2. PROVIDE PADLOCKS ON THE FEEDER DISCONNECTING DEVICES.
3. PULL OUT FEEDER WIRES TO SOURCE.
   A. REQUEST THE UTILITY COMPANY TO PULL OUT SERVICE WIRES TO SOURCE, WHERE APPLICABLE. ALL EXPENSES SHALL BE PAID BY THE GENERAL CONTRACTOR.
4. REMOVE ACCESSIBLE PARTS OF THE FEEDER OR SERVICE CONDUITS. CAP CONDUITS WHICH MAY BE RE-USED FOR FUTURE CONSTRUCTION. SUBJECT TO FIELD COORDINATION.
5. REMOVE ALL ELECTRICAL EQUIPMENT, OUTLETS, LIGHTING, CONDUITS, ETC. AND WIRE TO SAME. PROPERLY DISPOSE OF AS REQUIRED.
6. COORDINATE POWER SOURCE TO REMAIN FOR BALLFIELD LIGHTS WITH OWNER.

BUREAU OF ENGINEERING
OFFICIAL RECORD

THE CITY OF LOS ANGELES OR ITS OFFICERS OR AGENTS SHALL NOT BE RESPONSIBLE FOR THE ACCURACY OR COMPLETENESS OF ELECTRONIC COPIES OF THIS PLAN SHEET.

FILE PATH: A360://Studio City Recreation Center/SCRC-Project Model_Central_Final.rvt

SHEET ISSUE DATE: 10/19/17

REVISION DATES (DESIGN STAGE ONLY)

ENGINEERING
CITY OF LOS ANGELES

BUREAU OF ENGINEERING

NO.	REVISION DESCRIPTION	DATE	BY

BUILDING NO. -

INDEX NO. RP-300106

LICENSED ARCHITECT ROBERT LOMELIN LIC. NO. C 23333 REGISTRATION EXPIRES 2020 STATE OF CALIFORNIA

DEPARTMENT OF PUBLIC WORKS

TED ALLEN, PE
CITY ENGINEER

ARCHITECTURAL DIVISION		DATE:
ARCHITECT: ROBERT LOMELIN	LIC. NO.: C 23333	1-24-2019
DESIGNED BY: Z. AKHTER, M. CHAVARRIA, A. KIM, M. LAM		1-24-2019
DRAWN BY: Z. AKHTER, M. CHAVARRIA, A. KIM		1-24-2019
CHECKED BY: ROBERT LOMELIN		1-24-2019
APPROVED BY:MAHMOOD KARIMZADEH,AIA, DEPUTY CITY ENGINEER		1-24-2019

CITY OF LOS ANGELES

CLIENT: DEPARTMENT OF RECREATION AND PARKS
GENERAL MANAGER: MICHAEL A. SHULL

SHEET TITLE: DEMOLITION GENERAL NOTES

PROJECT: STUDIO CITY RECREATION CENTER

ADDRESS: 12621 RYE STREET, STUDIO CITY, CA 91604

WORK ORDER NO. E170267B
PLAN FILE NO. 860
DRAWING NO. A0.01
SHEET 53 OF SHEETS 211

PLOTTED:7/1/2019 11:24:36 AM

KEY NOTE

1 EXISTING TREES TO REMAIN.
2 (E) CONC. LOW WALL TO BE DEMOLISHED, SEE DEMOLITION GENERAL NOTES SHEET A0.01
3 (E) CONC. STAIRS TO BE DEMOLISHED, SEE DEMOLITION GENERAL NOTES SHEET A0.01
4 (E) CONC. LOW WALL TO BE DEMOLISHED, SAW CUT AT TOP STAIR EDGE AND RECONSTRUCT OF SAME MATERIALS & THICKNESS MATCHING ADJACENT WALL.
5 REMOVE AND REPLACE EXISTING CHAIN LINK FENCE, PLACING NEW FENCE ATOP NEW LOW WALL.
6 (E) GYMNASIUM BUILDING AND ASSOCIATED FOOTING/ FOUNDATION TO BE REMOVED IN THEIR ENTIRETY, SEE DEMOLITION GENERAL NOTES SHEET A0.01
7 (E) PICNIC TABLES TO BE REMOVED AND FURNISHED TO REC & PARKS, (E) CONCRETE SLAB TO BE REMOVED IN IT'S ENTIRETY.

KEY NOTE

8 (E) STL. STORAGE CONTAINER TO BE RELOCATED PER REC. & PARKS INSTRUCTION AND BE PROTECTED IN PLACE FOR THE DURATION OF CONSTRUCTION.
9 REMOVE (E) TREE AND ROOTS IN IT'S ENTIRETY. REFER TO TREE REMOVAL STANDARDS IN THE SPECIFICATIONS.
10 (E) SUMP PUMP AND CONCRETE SEAT WALL TOBE REMOVED IN IT'S ENTIRETY.
11 (E) DRIVEWAY TO REMOVE.
12 (E)GATE TO BE REMOVED.
13 (E) OUTDOOR BASKET BALL COURT TO REMAIN, PROTECT IN PLACE.
14 (E) WALKING PATH
15 (E) EXISTING EXERCISE EQUIPMENT. PROTECT IN PLACE.
16 (E) EXISTING EXERCISE EQUIPMENT. PROTECT IN PLACE.
17 (E) CURB AND HEDGES TO REMAIN, PROTECT IN PLACE.

SEPERATE DEMO PERMIT WILL BE ACQUIRIED

97' - 0 3/4"

59' - 5"

-TYP.

-TYP.

1 / A201 1 DEMOLITION PLAN (SEE CIVIL DWG. FOR ADDITIONAL DEMOLITION PLAN)
1" = 20'-0"

BUREAU OF ENGINEERING OFFICIAL RECORD

0 20' 40' 80'

N

THE CITY OF LOS ANGELES OR ITS OFFICERS OR AGENTS SHALL NOT BE RESPONSIBLE FOR THE ACCURACY OR COMPLETENESS OF ELECTRONIC COPIES OF THIS PLAN SHEET.

FILE PATH: A360://Studio City Recreation Center/SCRC-Project Model_Central_Final.rvt

SHEET ISSUE DATE: 06/06/17

REVISION DATES: (DESIGN STAGE ONLY)

DEPARTMENT OF PUBLIC WORKS
BUREAU OF ENGINEERING
CITY OF LOS ANGELES
ENGINEERING

NO.	REVISION DESCRIPTION	DATE	BY

BUILDING NO. -
INDEX NO. RP-300106

LICENSED ARCHITECT TED ALLEN LIC. NO. C 23333 REGISTERED STATE OF CALIFORNIA

CITY OF LOS ANGELES

		CITY ENGINEER	DATE:
TED ALLEN, PE	ARCHITECTURAL DIVISION		
	LIC. NO.: C 23333		1-24-2019
ARCHITECT: ROBERT LOMELIN			1-24-2019
DESIGNED BY:	Z. AKHTER, M. CHAVARRIA, A. KIM, M. LAM		1-24-2019
DRAWN BY:	Z. AKHTER, M. CHAVARRIA, A KIM		1-24-2019
CHECKED BY:	ROBERT LOMELIN		1-24-2019
APPROVED BY:	MAHMOOD KARIMZADEH,AIA, DEPUTY CITY ENGINEER		1-24-2019

CLIENT: DEPARTMENT OF RECREATION AND PARKS
GENERAL MANAGER: MICHAEL A. SHULL

SHEET TITLE: ARCHITECTURAL DEMOLITION SITE PLAN

PROJECT: STUDIO CITY RECREATION CENTER

ADDRESS: 12621 RYE STREET, STUDIO CITY, CA 91604

WORK ORDER NO. E170267B
PLAN FILE NO. 860
DRAWING NO. A0.02
SHEET 54 OF SHEETS 211

PLOTTED:7/1/2019 11:24:40 AM

GENERAL NOTES

1. THESE DRAWINGS AND SPECIFICATIONS AND COPIES, OR ANY OTHER ACCESSORIES THEREOF, ARE LEGAL INSTRUMENTS OF SERVICE FOR USE BY THE CITY AND AUTHORIZED REPRESENTATIVES ON THE DESIGNATED PROPERTY ONLY.
2. ALL WORK SHALL BE EXECUTED IN ACCORDANCE WITH THE CURRENT EDITION OF CITY BUILDING CODE AND ALL OTHER GOVERNING AGENCIES' REQUIREME
3. CONTRACTOR SHALL COMPLY WITH THE REGULATIONS OF THE OCCUPATION SAFETY AND HEALTH ACT.
4. ALL DIMENSIONS AND CONDITIONS SHALL BE CHECKED AND VERIFIED ON THE JOB SITE BY EACH SUBCONTRACTOR BEFORE THAT SUBCONTRACTOR BEGINS WORK. ANY ERRORS, OMISSIONS OR DISCREPANCIES SHALL BE BROUGHT TO THE ATTENTION OF THE CITY ENGINEER AND GENERAL CONTRACTOR BEFORE CONSTRUCTION BEGIN
5. ACCESSIBILITY AND USABILITY FOR THE PHYSICALLY HANDICAPPED SHALL CONFORM TO STATE OF CALIFORNIA HANDICAP ACCESS LAWS AS STIPULATED BY TITLE 24 AND SHALL COMPLY WITH THE AMERICANS WITH DISABILITIES AC
6. CONTRACTOR SHALL PROVIDE TEMPORARY TOILET WITH HAND WASHING AND OTHER TEMPORARY FACILITIES AS REQUIRE
7. ANY DEVIATIONS FROM THE CONTRACT DOCUMENTS WHICH ARE NECESSITATED BY FIELD CONDITIONS SHALL BE BROUGHT TO THE ATTENTION OF THE CITY ENG
8. ALL DIMENSIONS TAKE PRECEDENCE OVER SCALE. NOTE THAT DIMENSIONS ARE TO FACE OF WALL, UNLESS OBVIOUSLY SHOWN, OR MARKED CENTERLINE OF WALL OR COLUMN. CONTRACTOR SHALL NOT SCALE FROM THE DRAWIN
9. TYPICAL DETAILS SHALL APPLY WHERE NO SPECIFIC DETAILS OR SECTIONS ARE
10. PROVIDE PEDESTRIAN AND PROPERTY PROTECTION BARRICADES AND/OR CANOPIES AS REQUIRED BY THE LOCAL AUTHORITIES , OR AS NECESSARY FOR PEDESTRIAN SAFETY. A PERMIT IS REQUIRED FROM THE DEPARTMENT OF PUBLIC WORKS FOR A PROTECTION FENCE OR CANOPY ON OR OVER ANY STREET OR PUBLIC SPACE.
11. THE CONTRACTOR SHALL BE RESPONSIBLE FOR CONTINUOUS CLEANUP OF THE SITE AND OF ALL DEBRIS, WHETHER CREATED BY HIS WORK, OR BY THE FAILURE OF HIS SUBCONTRACTORS TO CLEAN UP AFTER THEIR WORK.
12. IT SHALL BE THE RESPONSIBILITY OF THE CONTRACTOR TO SUPERVISE ALL CUTTING AND PATCHING OF FINISHED WORK ALREADY INSTALLED, IF MADE NECESSARY BY ERRORS, CHANGES, OR OTHER REASONS; ALL REPLACEMENT WORK SHALL MATCH ORIGINAL SURFACES.
13. CONTRACTOR SHALL PROVIDE GALVANIC ISOLATION BETWEEN DISSIMILAR METALS.
14. ALL SURVEY DATA SHOWN ON DRAWINGS IS BASED ON A SURVEY MADE BY THE CITY OF LOS ANGELES, BUREAU OF ENGINEERING.
15. SOILS INVESTIGATION WAS PREFORMED BY GEOTECHNICAL ENGINEERING DIVISION, CITY OF LOS ANGELES DEPARTMENT OF PUBLIC WORKS, BUREAU OF ENGINEERING, FILE -- SUPPLEMENTAL.
16. HERE SHALL NOT BE EXPOSED PIPE, CONDUIT, DUCTS, VENTS, ETC. IN DESIGNATED FINISH SPACE OR AT BUILDING EXTERIOR, UNLESS NOTED AS EXPOSED CONSTRUCTION ON FINISH SCHEDULE OR SPECIFIED ON PLANS.
17. ALL ADDENDA, REQUESTS FOR INFORMATION, CHANGE ORDERS, BULLETINS, AND NOTICES, IF ANY ISSUED LATER, SHALL BE CONSIDERED AS PART OF THE WORK.
18. IN THE EVENT THERE ARE FOUND DISCREPANCIES OR AMBIGUITIES IN OR OMISSIONS FROM THE DRAWINGS, OR SHOULD THERE BE DOUBT AS TO THEIR MEANING OR INTENT, THE CITY ENGINEER SHALL BE NOTIFIED, IN ORDER TO PROVIDE A WRITTEN CLARIFICATION.
19. WHERE FACTORY PRIMED ITEMS OCCUR, SUCH AS GRILLES, DIFFUSERS, METAL TRIM AND ACCESSORIES, ETC. PAINT TO MATCH THE ADJACENT SURFACE OR AS SPECIFIED AS DIRECTED BY THE CITY ENGINEER.
20. IT SHALL BE THE RESPONSIBILITY OF THE CONTRACTOR TO OBTAIN APPROVAL BY THE LOCAL BUILDING INSPECTOR FOR ALL CONCEALED WORK BEFORE CLOSING UP.
21. PROVIDE BACKING FOR ALL CABINETS OR WALL HUNG EQUIPMENT PER MANUFACTURERS SPECIFICATIONS OR AS DIRECTED BY THE CITY ENGINEER.
22. ALL LUMBER IN CONTACT WITH MASONRY OR CONCRETE, OR LESS THAN 6" ABOVE THE GROUND SHALL BE PRESSURE-TREATED WOOD.
23. ALL EXTERIOR OPENINGS EXPOSED TO THE WEATHER SHALL BE FLASHED IN SUCH A MANNER AS TO MAKE THEM WATERPROOF. ALL FLASHING, COUNTERFLASHING AND COPING WHEN OF METAL, SHALL MEET THE GAUGES SPECIFIED, BUT NO LESS THAN 24 GA. GALVANIZED.
24. ALL GLAZING WITHIN 18" OF A FLOOR SHALL BE TEMPERED.
25. NO TRENCHES OR EXCAVATIONS 5' OR MORE IN DEPTH INTO WHICH A PERSON IS REQUIRED TO DESCEND SHALL BE ALLOWED WITHOUT ENGINEERED SHORING PLANS. IT SHALL BE THE RESPONSIBILITY OF THE CONTRACTOR TO PREPARE SUCH PLANS AND OBTAIN REQUIRED APPROVALS.
26. FIRE BLOCK AT MID-HEIGHT OF WALLS OVER 8'-0" HIGH.
27. PROVIDE WATERPROOF MEMBRANE OVER ALL EXTERIOR BUILDING WALLS BELOW GRADE. CARRY WATERPROOF MEMBRANE 6" ABOVE FINISHED GRADE. INSTALL PROTECTION BOARD PRIOR TO BACKFILLING.
28. THE CONSTRUCTION OR DEMOLITION OF ANY BUILDING, STRUCTURE, SCAFFOLDING OR FALSEWORK MORE THAN THREE-STORIES OR 36 FEET IN HEIGHT, REQUIRES A PERMIT FROM THE STATE OF CALIFORNIA DIVISION OF INDUSTRIAL SAFETY PRIOR TO THE ISSUANCE OF A BUILDING PERMIT.
29. CONTRACTOR IS RESPONSIBLE FOR PAYING AND AQUIRING PERMITS FOR CONSTRUCTION SIGNS.
30. EXIT DOOR SHALL NOT BE LESS THAN 36" IN WIDTH AND NOT LESS THAN 6'-8" CLEAR IN HEIGHT. PROJECTIONS INCLUDING PANIC HARDWARE SHALL NOT REDUCE THE OPENING TO LESS THAN 32" IN WIDTH.
31. THE EXIT DOOR MUST OPEN OVER A LANDING NOT MORE THAN 1/2" BELOW THE THRESHOLD.
32. INTERIOR WALL AND CEILING FINISHES FOR RECREATION AREAS SHALL NOT EXCEED A FLAME SPREAD CLASSIFICATION OF 200 (CLASS III)
33. ANY DECORATIONS USED SHALL BE NON COMBUSTIBLE OR FLAME RETARDANT TREATED IN AN APPROVED MANNER (CURTAINS, DRAPES, SHADES, ETC.)
34. PROVIDE ILLUMINATED EXIT SIGNS AND DIRECTIONAL ILLUMINATED EXIT SIGNS WITH MINIMUM 6" HIGH x 3/4" STROKE BLOCK LETTERS IN CONTRASTING BACKGROUND. LOCATIONS AS SHOWN ON PLANS AND AS REQUIRED BY FIRE DEPARTMENT INSPECTOR. WHENEVER THE BUILDING IS OCCUPIED, EXIT SIGNS SHALL BE LIGHTED SO THEY ARE CLEARLY VISIBLE.
35. EXIT PATH LIGHTING SHALL BE PROVIDED FOR HALL WAY, EXIT PASSAGE WAY, & EGRESS TO PUBLIC WAY ANYTIME THE BUILDING IS OCCUPIED.
36. PROVIDE ACCESS PANELS FOR MECHANICAL, ELECTRICAL, & PLUMBING EQUIPMENT. REVIEW LOCATIONS WITH THE CITY ENGINEER PRIOR TO STARTING WORK. PANEL FINISHES SHALL BE SELECTED BY THE CITY ENGINEER FROM A STANDARD COLOR PALETTE U.N.O.

GENERAL NOTES

37. POST OCCUPANT LOAD SIGNS IN RECREATION AND VOCATIONAL ROOM AS REQUIRED BY CODE.
38. THE CONTRACTOR SHALL PAY FOR ALL SURCHARGES, CONNECTION FEES, METER FEES, OR ANY MISC. FEES IMPOSED/REQUIRED BY UTILITY COMPANIES AS PART OF THEIR CONDITION OF SERVICES.
39. ALL EXPOSED EXTERIOR METAL FABRICATIONS SHALL BE SHOP GALVANIZED PER ASTM A153, A123, AND A386 U.N.O. FOR REPAIR OF DAMAGED GALVANIZED SURFACES RESULTING FROM WELDING USE GALVALLOY METHOD IN ACCORDANCE WITH MANUFACTURER'S INSTRUCTIONS.
40. THE CONSTRUCTION SHALL NOT RESTRICT A FIVE-FOOT CLEAR AND UNOBSTRUCTED ACCESS TO ANY WATER OR POWER DISTRIBUTION FACILITIES (POWER POLES, PULL-BOXES, TRANSFORMERS, VAULTS, PUMPS, VALVES, METERS, APPURTENANCES, ETC.0 OR TO THE LOCATION OF THE HOOK-UP. THE CONSTRUCTION SHALL NOT BE WITHIN TEN FEET OF ANY POWER LINES-WHETHER OR NOT THE LINES ARE LOCATED ON THE PROPERTY. FAILURE TO COMPLY MAY CAUSE CONSTRUCTION DELAYS AND/OR ADDITIONAL EXPENSES.

41 DOUBLE STRIPING OF STALLS SHALL BE PER FIG. 7 OF THE CITY OF LA BLDG. DEPT. STANDARDS.

42 *THE CONSTRUCTION SHALL NOT RESTRICT A FIVE-FOOT CLEAR & UNOBSTRUCTED ACCESS TO ANY WATER OR POWER FACILITIES OR TO THE LOCATION OF THE HOOK-UP. THE CONSTRUCTION SHALL NOT BE WITHIN TEN FEET OF ANY POWER LINES- WHETER OR NOT THE LINES ARE LOCATED ON THE PROPERTY. FAILURE TO COMPLY MAY CAUSE CONSTRUCTION DELAYS AND /OR ADDITIONAL EXPENSES.
*AN APPROVED SEISMIC GAS SHUTOFF VALVE WILL BE INSTALLED ON THE FUEL GAS LINE ON THE DOWN STREAM SIDE OF THE UTILITY METER & BE RIGIDLY CONNECTED TO THE EXTERIOR OF THE BUILDING OR STRUCTURE CONTAINING THE FUEL GAS PIPING.
*PROVIDE ULTRA FLUSH WATER CLOSETS FOR ALL NEW CONSTRUCTION. EXISTING SHOWER HEADS & TOILETS MUST BE ADAPTED FOR LOW WATER CONSUMPTION.

43 DETAIL ALL STAIRWAYS TO COMPLY WITH SECTION 1009.
a. RISE: 7" MAX. RUN (TREAD): 11" MIN.
h. HANDRAIL HEIGHT: 34-38", MAX 4" OPENINGS (1012.2).

STORM WATER - BEST MANAGEMENT PRACTICE

CONTRACTOR MUST COMPY WITH THE FOLLOWING STANDARDS:

1. ERODED SEDIMENTS AND OTHER POLLUTANTS MUST BE RETAINED ON SITE AND MAY NOT BE TRANSPORTED FROM THE SITE VIA SHEETFLOW, SWALES, AREA DRAINS, NATURAL DRAINAGE COURSE OR WIND.
2. STOCKPILES OF EARTH AND OTHER CONSTRUCTION-RELATED MATERIALS MUST BE PROTECTED FROM BEING TRANSPORTED FROM THE SITE BY WIND OR WATER.
3. FUELS, SOILS, SOLVENTS AND OTHER TOXIC MATERIALS MUST BE STORED IN ACCORDANCE WITH THEIR LISTING AND ARE NOT TO CONTAMINATE THE SOIL NOT THE SURFACE WATERS. ALL APPROVED STORAGE CONTAINERS ARE TO BE PROTECTED FROM THE WEATHER. SPILLS MUST BE CLEANED UP IMMEDIATELY AND DISPOSED OF IN A PROPER MANNER. SPILLS MAY NOT BE WASHED INTO THE DRAINAGE SYSTEM.
4. EXCESS OR WASTE CONCRETE MAY NOT BE WASHED INTO THE PUBLIC WAY OR ANY OTHER DRAINAGE SYSTEM. PROVISIONS SHALL BE MADE TO RETAIN CONCRETE WASTES ON-SITE UNTIL THEY CAN BE DISPOSED OF AS SOLID WASTE.
5. TRASH AND CONSTRUCTION-RELATED SOLID WASTE MUST BE DEPOSITED INTO A COVERED RECEPTACLE TO PREVENT CONTAMINATION OF RAINWATER AND DISPERSAL BY WIND.
6. SEDIMENTS AND OTHER MATERIALS MAY NOT BE TRACKED FROM THE SITE BY VEHICLE TRAFFIC. THE CONSTRUCTION ENTRANCE ROADWAYS MUST BE STABILIZED SO AS TO INHIBIT SEDIMENTS FROM BEING DEPOSITED INTO THE PUBLIC WAYS. ACCIDENTAL DEPOSITIONS MUST BE SWEPT UP IMMEDIATELY AND MAY NOT BE WASHED DOWN BY RAIN OR BY ANY OTHER MEANS.

ACCESSIBILITY

1. ALL ENTRANCES SHALL BE IDENTIFIED WITH AT LEAST ONE STANDARD I.S.O. ACCESSIBILITY SIGN AND WITH ADDITIONAL DIRECTIONAL SIGNS, AS REQUIRED, VISIBLE FROM APPROACHING PEDESTRIAN WAYS.
2. MAXIMUM EFFORT TO OPERATE DOORS SHALL NOT EXCEED 8.5 LBS. FOR EXTERIOR DOORS AND 5 LBS. FOR INTERIOR DOORS. SUCH PULL OR PUSH EFFORT BEING APPLIED AT RIGHT ANGLES TO HINGED DOORS AND ALL THE CENTER PLANE OF SLIDING OR FOLDING DOORS. COMPENSATING DEVICES OR AUTOMATIC DOOR OPERATORS MAY BE UTILIZED TO MEET THE ABOVE STANDARDS. WHEN FIRE DOORS ARE REQUIRED, THE MAXIMUM EFFORT TO OPERATE THE DOOR MAY BE INCREASED NOT TO EXCEED 15 LBS.
3. THE CENTER OF RECEPTACLE OUTLETS SHALL BE NOT LESS THAN 15 INCHES ABOVE THE FLOOR OR WORKING PLATFORM.
4. THE CENTER OF THE GRIP OF THE OPERATING HANDLE OF SWITCHES INTENDED TO BE USED BY THE OCCUPANT OF THE ROOM OR AREA TO CONTROL LIGHTING AND RECEPTACLE OUTLETS, APPLIANCES, OR COOLING, HEATING AND VENTILATING EQUIPMENT SHALL BE MORE THAN 4-FEET ABOVE THE FLOOR OR WORKING PLATFORM.
5. THE CENTER OF FIRE ALARM INITIATING DEVICES (BOXES) SHALL BE LOCATED 48-INCHES ABOVE THE LEVEL OF THE FLOOR, WORKING PLATFORM, GROUND SURFACE OR SIDEWALK.
6. THE INTERNATIONAL SYMBOL OF ACCESSIBILITY SHALL BE THE STANDARD USED TO IDENTIFY FACILITIES THAT ARE ACCESSIBLE TO AND USABLE BY PHYSICALLY DISABLED PERSONS AS SET FORTH IN THESE BUILDING STANDARDS. THE SYMBOL SPECIFIED ABOVE SHALL CONSIST OF A WHITE FIGURE ON A BLUE BACKGROUND. THE BLUE SHALL BE EQUAL TO COLOR NO. 15090 IN FEDERAL STANDARD 595b.
7. IF EMERGENCY WARNING SYSTEMS ARE REQUIRED, THEY SHALL ACTIVATE A MEANS OF WARNING TO THE HEARING IMPAIRED. FLASHING VISUAL WARNING SHALL HAVE A FREQUENCY OF NOT MORE THAN 60 FLASHES PER MINUTE.
8. AT SINKS, FAUCET CONTROLS AND OPERATING MECHANISMS SHALL BE OPERABLE WITH ONE HAND AND SHALL NOT REQUIRE TIGHT GRASPING, PUNCHING OR TWISTING OF THE WRIST. THE FORCE REQUIRED TO ACTIVATE CONTROLS SHALL BE NO GREATER THAN 5 LB/F. LEVER OPERATED, PUSH TYPE AND ELECTRONICALLY CONTROLLED MECHANISMS ARE EXAMPLES OF ACCEPTABLE DESIGNS. SELF-CLOSING VALVES ARE ALLOWED IF THE FAUCET REMAINS OPEN FOR AT LEAST 10 SECONDS.
9. THE SURFACE OF RAMPS SHALL BE SLIP RESISTANT.

SOUND

1. SEPARATE ALL ELECTRICAL AND SIGNAL OUTLET BOXES IN ACOUSTICAL WALLS LOCATED ON OPPOSITE WALL SURFACES HORIZONTALLY BY 12" AND SEPARATED BY A STUD. BACK AND SIDES OF BOXES TO BE SEALED WITH 1/4" RESILIENT SEALANT AND BACKED BY OUTLET BOX PADS AND BY MINIMUM 2" THK. FIBER INSULATION.
2. ALL RIGID CONDUIT, DUCTS, PLUMBING PIPES AND APPLIANCE VENTS LOCATED IN ACOUSTICAL WALLS SHALL BE ISOLATED FROM THE STRUCTURE W/ RESILIENT SLEEVES, MOUNTS OR 1/4" RESILIENT MATERIAL OR AS DETAILED.
3. ALL VENTILATING AND CONDITIONED AIR DUCTS LOCATED IN SOUND ASSEMBLIES ARE TO BE LINED.
4. AN APPROVED PERMANENT, RESILIENT ACOUSTICAL SEALANT IS TO BE INSTALLED ALONG JOINT BETWEEN FLOOR AND ACOUSTICAL WALLS.
5. ALL PENETRATIONS INTO SOUND RATED PARTITIONS OR FLOOR CEILING ASSEMBLIES SHALL BE SEALED WITH AN APPROVED RESILIENT SEALANT AS SPECIFIED.
6. MINERAL FIBER INSULATION SHALL BE INSTALLED IN JOINT SPACES WHENEVER PLUMBING PIPING OR DUCTWORK PENETRATES A FLOOR/CEILING ASSEMBLY OR WHERE SUCH UNIT PASSES THROUGH THE PLANE OF THE FLOOR/CEILING ASSEMBLY FROM WITHIN A WALL. THE INSULATION SHALL EXTEND 12" BEYOND THE PIPE OR DUCT.
7. PROVIDE 3"(R11) SOUND ATTENUATION BATT INSULATION IN ALL WALLS OF REST ROOMS, MECHANICAL ROOMS, ELECTRICAL ROOMS, DUCT SHAFTS U.N.O.

MEANS OF EGRESS

1. EXIT SIGNS SHALL BE INTERNALLY OR EXTERNALLY ILLUMINATED
2. EXIT SIGNS ILLUMINATED BY AN EXTERNAL SOURCE SHALL HAVE AN INTENSITY OF NOT LESS THAN 5 FOOT CANDLES (54 lux).
3. INTERNALLY ILLUMINATED SIGNS SHALL BE LISTED AND LABELED AND SHALL BE INSTALLED IN ACCORDANCE WITH THE MANUFACTURER'S INSTRUCTIONS AND SECTION
4. EXIT SIGNS SHALL BE ILLUMINATED AT ALL TIMES
5. EXIT SIGNS SHALL BE CONNECTED TO AN EMERGENCY POWER SYSTEM THAT WILL PROVIDE AN ILLUMINATION OF NOT LESS THAN 90 MIN. IN CASE OF PRIMARY POWER LOSS (1013.63)
6. EGRESS DOORS SHALL BE READILY OPENABLE FROM THE EGRESS SIDE WITHOUT THE USE OF A KEY OR SPECIAL KNOWLEDGE OR EFFORT. SEE 1008.1.8.3 FOR EXCEPTIONS.
7. DOOR HANDLES, LOCK AND OTHER OPERATING DEVICES SHALL BE INSTALLED AT A MIN. 34" AND A MAX. 48" ABOVE THE FINISHED FLOOR. (1010.1.9.2)
8. THIS DOOR TO REMAIN UNLOCKED WHEN BUILDING IS OCC
9. ALL EGRESS DOOR OPERATION SHALL ALSO COMPLY WITH SECTION 1008.1.8-
10. THE MEANS OF EGRESS, INCLUDING THE EXIT DISCHARGE, SHALL BE ILLUMINATED AT ALL TIMES THE BUILDING SPACE SERVED BY THE MEANS OF EGRESS IS OCC
11. THE MEANS OF EGRESS ILLUMINATION LEVEL SHALL NOT BE LESS THAN 1FOOT-CANDLE AT THE WALKING SURFACE. (1008.2.1, 1008.3.5)
12. THE POWER SUPPLY FOR MEANS OF EGRESS ILLUMINATION SHALL NORMALLY BE PROVIDED BY THE PREMISES' ELECTRICAL SUPPLY. IN THE EVENT OF POWER SUPPLY FAILURE, AN EMERGENCY ELECTRICAL SYSTEM SHALL AUTOMATICALLY ILLUMINATE THE FOLLOWING AREAS:
    A. AISLES AND UNENCLOSED EGRESS STAIRWAYS IN ROOMS AND SPACES THAT REQUIRE TWO OR MORE MEANS OF EGRESS
    B. CORRIDORS, EXIT ENCLOSURES AND EXIT PASSAGEWAYS IN BUILDINGS REQUIRED TO HAVE TWO OR MORE EXITS.;
    C. EXTERIOR EGRESS COMPONENTS AT OTHER THAN THE LEVEL OF EXIT DISCHARGE UNTIL EXIT DISCHARGE IS ACCOMPLISHED FOR BUILDINGS REQUIRED TO HAVE TWO OR MORE EXITS.
    D. INTERIOR EXIT DISCHARGE ELEMENTS, AS PERMITTED IN SECTION 1024.1, IN BUILDINGS REQUIRED TO HAVE TWO OR MORE EXITS.
    E. EXTERIOR LANDINGS, AS REQUIRED BY SECTION 1008.1.5, FOR EXIT DISCHARGE DOORWAYS IN BUILDINGS REQUIRED TO HAVE TWO OR MORE EXITS.
13. THE EMERGENCY POWER SYSTEM SHALL PROVIDE POWER FOR A DURATION OF NOT LESS THAN 90 MINUTES AND SHALL CONSIST OF STORAGE BATTERIES, UNIT EQUIPMENT OR AN ON-SITE GENERATOR. THE INSTALLATION OF THE EMERGENCY POWER SYSTEM SHALL BE IN ACCORDANCE WITH SECTION 2702. (1008.3.4)
14. EMERGENCY LIGHTING FACILITIES SHALL BE ARRANGED TO PROVIDE INITIAL ILLUMINATION THAT IS AT LEAST AN AVERAGE OF 1 FOOT-CANDLE (11 lux) AND A MINIMUM AT ANY POINT OF 0.1 FOOT-CANDLE (1 lux) MEASURED ALONG THE PATH OF EGRESS AT FLOOR LEVEL. ILLUMINATION LEVELS SHALL BE PERMITTED TO DECLINE TO 0.6 FOOT-CANDLE (6 lux) AVERAGE AND A MINIMUM AT ANY POINT OF 0.06 FOOT-CANDLE (0.6 lux) AT THE END OF THE EMERGENCY LIGHTING TIME DURATION. A MAXIMUM-TO-MINIMUM ILLUMINATION UNIFORMITY RATIO OF 40 TO 1 SHALL NOT BE EXCEEDED.
15. THE EXIT SIGNS SHALL ALSO BE CONNECTED TO AN EMERGENCY ELECTRICAL SYSTEM PROVIDED FROM STORAGE BATTERIES UNIT EQUIPMENT OR AN ON-SITE GENERATOR SET, AND THE SYSTEM SHALL BE INSTALLED IN ACCORDANCE WITH THE ELECTRICAL CODE. FOR HIGH RISE BUILDINGS, SEE SECTION 403.

FIRE

1. ALL EXIT DOORS AND EXIT GATES MUST BE OPERABLE FROM THE INSIDE WITHOUT THE USE OF A KEY OR SPECIAL KNOWLEDGE OR EFFORT. FLUSH OR SURFACE BOLTS ARE PROHIBITED.
2. PROVIDE AND MAINTAIN FIRE EXTINGUISHERS AS REQUIRED BY THE LOCAL FIRE DEPARTMENT FIELD INSPECTOR DURING CONSTRUCTION. PROVIDE PERMANENT FIRE EXTINGUISHERS IN NUMBER, SIZE AND LOCATION AS SPECIFIED BY THE FIRE DEPARTMENT WITH ARCHITECTS APPROVAL PRIOR TO INSTALLATION. ALL SUCH PERMANENT EXTINGUISHERS SHALL BE IN RECESSED CABINETS.
3. THE CONTRACTOR SHALL BE RESPONSIBLE TO CONSTRUCT ALL FIRE RATED SPACES TO THE REQUIREMENTS OF THE APPLICABLE CODES AND STANDARDS. PROVIDE COMBINATION FIRE DAMPERS PER UBC STANDARDS 43-7 AND ACCESS PANELS FOR DUCTS AND A.C. FIXTURES WHEN PASSING THROUGH THESE SPACES. PROVIDE APPROPRIATE FIRE RATED ENCLOSURE BEHIND RECESSED LIGHT FIXTURES, WHERE REQUIRED.
4. PROVIDE OUTSIDE EARTH QUAKE AUTO SHUT-OFF GAS SHUT-OFF VALVES, CONSPICUOUSLY MARKED.
5. EXIT LIGHTING SHALL BE PROVIDED GIVING MINIMUM VALUE OF ONE FOOT-CANDLE AT FLOOR LEVEL.
6. CORRIDORS AND AISLES IN PUBLIC AREAS SHALL PROVIDE A MINIMUM 44" CLEAR WIDTH TO PUBLIC RIGHT-OF-WAY.
7. T.V. ANTENNA CROSS ARMS OR OTHER ROOF OBSERVATION SHALL BE LOCATED 7'-0" MINIMUM ABOVE FLAT ROOF AREAS.
8. PROVIDE AREA FOR COMBUSTIBLE RUBBISH STORAGE
9. STORAGE, DISPENSING OR USE OF ANY FLAMMABLE OR COMBUSTIBLE LIQUIDS, FLAMMABLE GASES AND HAZARDOUS CHEMICALS SHALL COMPLY WITH UFC REGULATIONS.
10. ROOF OBSTRUCTIONS SUCH AS TELEVISION ANTENNA, GUY WIRE, SOLAR PANEL, RAZOR RIBBON, FENCE, CABLE, OR OTHER OBSTRUCTIONS SHALL NOT PREVENT FIRE DEPARTMENT ACCESS IN THE EVENT OF FIRE.
11. MAINTAIN FIRE RESISTIVE INTEGRITY AROUND PENETRATIONS INTO RATED ASSEMBLIES AS FOLLOWS:
    A. FOR LARGE OPENINGS (I.E. RECESSED LIGHT FIXTURES), CONSTRUCT 5/8" TYP. GYP. BOARD ENCLOSURE AROUND OBJECT.
    B. FOR WIDE GAPS OR CRACKS, USE FIRE SAFING INSULATION (OPENINGS GREATER THAN ONE INCH)
    C. FOR PIPE/CONDUIT PENETRATIONS., USE FLAME-STOPPING CAULKING OF RATING NOT LESS THAN THAT OF THE ASSEMBLY BEING PENETRATED. MATERIAL SHALL MEET REQUIREMENTS OF UL-1479. SEE SPECS SECTION 07840 FIRE STOPPING.

SECURITY

1. ALL SECURITY OPENINGS SHALL COMPLY WITH DIVISION 67 OF THE LOS ANGELES CURRENT BUILDING CODE INCLUDING THE FOLLOWING:
    A. ALL PIN TYPE HINGES WHICH ARE ACCESSIBLE FROM OUTSIDE THE SECURED AREA WHEN THE DOOR IS CLOSED SHALL HAVE NON-REMOVABLE HINGE PINS.
    B. DEADBOLTS SHALL CONTAIN HARDENED INSERTS.
    C. STRAIGHT DEADBOLTS SHALL HAVE A MINIMUM THROW OF 1" AND AN EMBEDMENT OF 1/4".
    D. A HOOK SHAPED OR AN EXPANDING LUG DEADBOLT SHALL HAVE A MIN. THROW OF 1/4".
    E. CYLINDER GUARDS SHALL BE INSTALLED IN ALL CYLINDER LOCKS WHENEVER THE CYLINDER PROJECTS BEYOND THE FACE OF THE DOOR OR IS OTHERWISE ACCESSIBLE TO GRIPPING TOOLS.
    F. ALL GLASS DOORS SHALL HAVE FULLY TEMPERED GLASS.
    G. PROVIDE DEADLOCKING LATCH KEY OPERATED LOCKS ON EXTERIOR.
    H. ALL GLAZING WITHIN 40" OF DOOR LOCK SHALL BE TEMPERED GLASS.
    J. DOOR STOPS OF IN-SWINGING EXTERIOR DOORS SHALL BE ONE PIECE CONSTRUCTION.
    K. SLIDING DOOR AND WINDOWS SHALL BE PROVIDED WITH A DEVICE IN THE UPPER CHANNEL OF THE MOVING PANEL TO PROHIBIT RAISING AND REMOVING OF THE MOVING PANEL IN THE CLOSED OR PARTIALLY OPEN POSITION.
    L. SLIDING GLASS DOOR SHALL BE EQUIPPED WITH LOCKING DEVICES AND SHALL BE
2. SEE THE DRAWINGS FOR SECURITY REQUIRMENTS AT HOLDING AND HIGH SECURITY IEN AREAS. SUBJECTED TO THE TEST SPECIFIED IN SECTION 6717.1 REQUIREMENTS OF UL-1479. SEE SPECS SECTION 07840 FIRE STOPPING.

MISCELLANEOUS

1. PROVIDE ULTRA FLUSH WATER CLOSETS FOR ALL NEW CONSTRUCTION. EXISTING SHOWER HEADS AND TOILETS MUST BE ADAPTED FOR LOW WATER CONSUMPTION.
2. APPLY CITY OF LOS ANGELES APPROVED GRAFFITI RESISTANT COATING SYSTEM AS SPECIFIED AT ALL EXTERIOR BUILDING WALLS WITHIN MIN. 10-FEET 6-INCHES OF GRADE AND AT OTHER AREAS SPECIFIE
3. WALLS, HALLS, CORRIDORS AND OTHER CIRCULATION SPACES SHALL HAVE MIN. HEAD ROOM OF 7'
4. SIGNAGE DEPICTING ACCESSIBILITY TO THE BUILDING SHALL HAVE THE INTERNATIONAL SYMBOL OF ACCESSIBILITY AND SHALL CONSIST OF A WHITE FIGURE ON A BLUE BACKGROUND. THE BLUE SHALL EQUAL TO COLOR NO. 15090 IN FEDERAL STANDARD 595
5. ALL TOILET ROOMS SHALL BE VENTILATED TO PROVIDE A MINIMUM OF FIVE AIR CHANGES PER HOUR (MORE IS REQUIRED PER MECHANICAL DRAWINGS) AND CONNECTED DIRECTLY TO THE OUTSID
6. WHERE CONFLICT OCCURS ON DRAWING THE ENTIRE SET OF MECHANICAL, ELECTRICAL, PLUMBING, STRUCTURAL AND ARCHITECTURAL PLANS MUST BE CONSIDERED FOR ITS RESOLUTION AND MAY NOT BE CONSIDERED AS AN EXTRA WORK FOR THE CONTRACTOR.
7 ALL ELEVATOR PITS SHALL BE EQUIPPED WITH A DRAIN TO PREVENT THE ACCUMULATION OF WATER. THE WATER 7 OTHER LIQUIDS COLLECTED IN THE BOTTOM OF AN ELEVATOR SHAFT MAY NOT BE DISCHARGED TO SANITARY SEWER OR STORM DRAIN. PLUMBING INFORMATION BULLETIN, P/PC 2001-04.

BUREAU OF ENGINEERING
OFFICIAL RECORD

THE CITY OF LOS ANGELES OR ITS OFFICERS OR AGENTS SHALL NOT BE RESPONSIBLE FOR THE ACCURACY OR COMPLETENESS OF ELECTRONIC COPIES OF THIS PLAN SHEET.

FILE PATH: A360://Studio City Recreation Center/SCRC-Project Model_Central_Final.rvt

SHEET ISSUE DATE: 02/09/10

REVISION DATES (DESIGN STAGE ONLY)

CITY OF LOS ANGELES
DEPARTMENT OF PUBLIC WORKS
BUREAU OF ENGINEERING
ENGINEERING
CITY OF LOS ANGELES

NO.	REVISION DESCRIPTION	DATE	BY

BUILDING NO. --
INDEX NO. RP-300106

LICENSED ARCHITECT TED ALLEN C 23333 REGISTRATION EXPIRES 08-31-2013 STATE OF CALIFORNIA

CITY ENGINEER	DATE:	
	1-24-2019	
	1-24-2019	
	1-24-2019	
	1-24-2019	

TED ALLEN, PE
ARCHITECTURAL DIVISION
LIC. NO.: C 23333
ARCHITECT: ROBERT LOMELIN
DESIGNED BY: Z. AKHTER, M. CHAVARRIA, A. KIM, M. LAM
DRAWN BY: Z. AKHTER, M. CHAVARRIA, A. KIM
CHECKED BY: ROBERT LOMELIN
APPROVED BY:MAHMOOD KARIMZADEH-AIA, DEPUTY CITY ENGINEER 1-24-2019

CITY OF LOS ANGELES
CLIENT: DEPARTMENT OF RECREATION AND PARKS
GENERAL MANAGER: MICHAEL A. SHULL

SHEET TITLE: GENERAL NOTES

PROJECT: STUDIO CITY RECREATION CENTER
ADDRESS: 12621 RYE STREET, STUDIO CITY, CA 91604

WORK ORDER NO. E170267B
PLAN FILE NO. 860
DRAWING NO. A001
SHEET 55 OF SHEETS 211

PLOTTED:7/30/2019 2:13:19 PM

A	ABOVE	ABV.
	ABOVE FINISH FLOOR	A.F.F.
	ACOUSTICAL CEILING TILE	A.C.T.
	ACCESS PANEL	ACP
	AGGREGATE	AGG.
	AIR CONDITION	A/C
	ALUMINUM	ALUM.
	ANODIZED	ANOD.
	AMERICAN CONCRETE INSTITUTE	A.C.I.
	AMERICAN INSTITUTE OF STEEL CONSTRUCTION	AISC or A.I.S.C.
	AMERICAN NATIONAL STANDARDS INSTITUTE	ANSI
	AMERICAN SOCIETY OF CIVIL ENGINEERS	ASCE
	AMERICAN SOCIETY OF TESTING AND METERIAL	ASTM
	AMERICAN WELDING SOCIETY	AWS
	AMOUNT	AMT.
	AND	&
	ANCHOR BOLT	A.B.
	ANGLE	L
	APPROVED	APPD.
	APPROXIMATE	APPROX.
	ARCHITECT OR ARCHITECTURAL	ARCH
	ASBESTOS	ASB.
	ASPHALT	ASPH.
	ASPHALTIC CONCRETE	A.C.
	ASPHALT TILE	A.T.
	ASSOCIATE	ASSOC.
	ASSOCIATION	ASSN.
	AT	@
	AUTOMATIC	AUTO
	AVENUE	AVE.
B	BASEMENT	BSMT.
	BEAM	BM
	BETWEEN	BET.
	BLOCK	BLK.
	BLOCKING	BLKG.
	BOARD	BD.
	BOTH WAYS	B.W.
	BOTTOM	BOT.
	BOTTOM OF JOINT	BOJ
	BOTTOM OF MULLION	BOM
	BOULEVARD	BLVD.
	BRACKET	BRKT.
	BRONZE	BRZ.
	BRITISH THERMAL UNITS	BTU
	BUILT-UP	B/U
	BUILDING	BLDG.
C	CABINET	CAB.
	CAST IRON	C.I.
	CAST IRON PIPE	C.I.P.
	CATCH BASIN	C.B.
	CEILING	CLG.
	CEMENT	CEM.
	CENTER	CTR.
	CENTERLINE	CL or
	CENTER TO CENTER	C TO C
	CERAMIC TILE	C.T.
	CHALKBOARD	CK BD.
	CHANGE	CHG.
	CHANNEL	CHAN. or [
	CLEAN OUT	C.O.
	CLEAR	CLR.
	COLUMN	COL.
	COMMON	COM.
	COMMUNICATION	COMM.
	COMPANY	CO.
	COMPOSITION	COMPO.
	CONCRETE	CONC.
	CONCRETE BLOCK	CONC. BLK.
	CONCRETE MASONRY UNIT	C.M.U.
	CONNECTION	CONN.
	CONSTRUCT or CONSTRUCTION	CONST.
	CONTINUOUS or CONTINUE	CONT.
	CONTRACT or CONTRACTOR	CONTR.
	CONTROL JOINT	C.J.
	CORNER	COR.
	CORRIDOR	CORR.
	COUNTERSINK	CSK.
	CARPET	CP.
	CERAMIC TILE	CT.
	CUBIC	CU.
	CUBIC FOOT	CU. FT.
	CUBIC FEET PER MINUTE	CFM
	CUBIC INCH	CU. IN.
	CUBIC YARD	CU. YD.
	CURB FACE	C.F.
D	DEGREE	DEG. or °
	DEPARTMENT	DEPT.
	DETAIL	DET.
	DIAGONAL	DIAG.
	DIAMETER	DIA. or
	DIMENSION	DIM.
	DISPENSER	DISP.
	DISTANCE	DIST.
	DIVISION	DIV.
	DOOR	DR
	DOUBLE	DBL
	DOWEL	DWL.
	DOWN	DN
	DOWNSPOUT	D.S.
	DRAWING	DWG
	DRINKING FOUNTAIN	DF.
E	EACH	EA.
	EAST	E
	ELECTRIC or ELECTRICAL	ELEC.
	ELEVATION	EL.
	ELEVATOR	ELEV.
	ELASTOMERIC MEMBRANE	E.M.
	EMERGENCY	EMER.
	EXPOSED CONSTRUCTION	E.C.
	END VERTICAL CURVE	E.V.C.
	ENAMEL	EN.
	ENGINEER	ENGR., ENG.
	EQUIPMENT	EQUIP.
	EQUAL	EQ.
	ESTIMATE	EST.
	EXCAVATE	EXC.
	EXISTING	EXIST.
	EXPANSION BOLT	E.B.
	EXPANSION JOINT	E.J.
	EXTERIOR	EXT.
	EXTRUDED	EXTR.
	EXTERIOR GRADE	EXT. GR.
	EYE WASH	E.W.
F	FABRIC WALL COVERING	F.W.C.
	FABRIC WALL PANEL	F.W.P.
	FACE OF CONCRETE	F.O.C.
	FACE OF MASONRY	F.O.M.
	FACTORY	FAC.
	FLUOROCARBON RESINOUS COATED	FCRC
	FACE OF STUD	F.O.S.
	FEET / FOOT	FT.
	FIGURE	FIG.
	FINISH	FIN.
	FINISH FACE	F.F.
	FIRE ALARM PULL	F.P.
	FIRE EXTINGUISHER	F.E.
	FIRE HOES CABINET	F.H.C.
	FIRE HYDRANT	F.H.
	FIREMAN'S PHONE JACK	F.J.
	FLANGE	FLG.
	FLATHEAD WOOD SCREWS	F.H.W.S.
	FLOOR	FL.
	FLOOR DRAIN	F.D.
	FLOOR SINK	F.S.
	FLOW LINE	F.L. or
	FOOTING	FTG.
	FOUNDATION	FND.
G	GALLON	GAL.
	GALVANIZED	GALV.
	GALVANIZED IRON	GI.
	GAGE	GA.
	GLASS	GL.
	GOVERNMENT	GOVT.
	GRAB BAR	G.B.
	GRANITE	GRAN.
	GRADE	GR.
	GRATING	GRTG.
	GYPSUM BOARD	GYP. BD.
H	HANDICAP	HC/
	HANGER	HGR
	HARDBOARD	HBD
	HARDNER	HARD.
	HARDWARE	HDW.
	HARDWOOD	HWD.
	HEADER	HDR.
	HEXAGONAL	HEX.
	HEIGHT	HT.
	HIGH POINT	H.P.
	HOLLOW CORE	H.C.
	HOLLOW METAL	H.M.
	HORIZONTAL	HORIZ.
	HORIZONTAL HOOK	HK.
	HOSE BIBB	H.B.
	HOUR	HR.
I	I BEAM	I
	INCH	IN or "
	INFORMATION	INFO
	INSIDE DIAMETER	I.D.
	INSULATION	INSUL.
	INTERIOR	INT.
	INTERIOR GRADE	INT. GR.
	INTERMEDIATE	INTER.
	INVERT	INV.
J	JOINT	JT.
	JOIST	JST.
K	KIP	K
L	LABORATORY	LAB.
	LAMINATE	LAM.
	LANDING	LDG.
	LAVATORY	LAV.
	LEVEL	LEV.
	LIGHT	LT.
	LINOLEUM	LINO.
	LONG	LG.
	LUMBER	LUM.
M	MACHINE	MACH.
	MANHOLE	M.H.
	MANUFACTURER or MANUFACTURING	MFR.
	MINERAL FISSURED TILE	MFT.
	MARK	MK.
	MASONRY OPENING	MO
	MATERIAL	MAT.
	MAXIMUM	MAX.
	MECHANICAL	MECH.
	MEDICINE CABINET	MC
	MEMBRANE WATERPROOFING	MWP
	METAL	MTL.
	MEZZANINE	MEZZ.
	MINIMUM	MIN.
	MISCELLANEOUS	MISC.
	MOULDING	MLDG.
	MOUNTED	MTD.
N	NATIONAL	NATL.
	NATIONAL BOARD OF FIRE UNDERWRITERS	NBFU
	NATIONAL ELECTRICAL CODE	NEC
	MANUFACTURERS ASSOC.	NEMA
	NATURAL	NAT.
	NATURAL GRADE	NAT. GR.
	NOMINAL	NOM.
	NORTH	N
	NOT IN CONTRACT	N.I.C.
	NOT TO SCALE	N.T.S.
	NUMBER	NO. or #
O	OCCUPATIONAL SAFETY AND HEALTH ADMINIST	O.S.H.A.
	OFFICE	OFF.
	OVER FLOW DRAIN	OFD
	ON CENTER	O.C.
	OPENING	OPNG.
	OPPOSITE	OPP.
	OUTSIDE DIAMETER	O.D.
	OUTSIDE FACE CONCRETE	O.F.C.
	OUTSIDE FACE MASONRY	O.F.M.
	OUTSIDE FACE STUDS	O.F.S.
	OUT TO OUT	O TO O
P	PAIR	PR.
	PAINTED	PTD.
	PARTITION	PART.
	PEDESTAL	PED.
	PENNY	d
	PERFORATED	PERF
	PERPENDICULAR	PERP.
	PICKET FENCE	PF
	PIECE	PC.
	PIPE BOLLARD	P.B.
	PLASTER	PLAS.
	PLASTIC LAMINATE	P-LAM.
	PLATE	PL.
	PANEL	PNL.
	POINT	PT.
	PORTLAND CEMENT CONCRETE	P.C.C.
	POUND	LB. or #
	POWER POLE	P.P.
	PRECAST	PRCST.
	PREFABRICATED	PREFAB.
	PROPERTY	PROP.
	PROPERTY LINE	
	PULL CHAIN	P.C.
	POLYVINYL CHLORIDE	PVC
	POLYURETHANE ENAMEL	PVE
	PLYWOOD	PLYWD.
Q	QUARRY TILE	QT
R	RADIUS	RAD.
	RISER	R.
	RUBBER BASE	R.B.
	RECTANGLE	RECT.
	REDWOOD	REWD.
	REFER TO	RE
	REFLECTED CEILING PLAN	R.C.P.
	REFRIGERATOR	REF.
	REINFORCE or REINFORCING	REINF.
	REQUIRED	REQD.
	REVISION	REV.
	RIGHT-OF-WAY	R.O.W.
	ROOF	RF.
	ROOF DRAIN	R.D.
	ROOFING	RFG.
	ROOM	RM.
	ROUGH OPENING	RO.
	ROUND	RD.
S	SNITARY SEWER	SANT.SEW.
	SCHEDULE	SCH
	SECTION	SE.
	SHEATHING	SHTHG.
	SHEET	SHT.
	SIMILAR	SIM.
	SINGLE	SGL.
	SOLID CORE	S.C.
	SOUTH	S.
	SPECIFICATION	SPEC.
	SPEAKER	SPK
	SQUARE	SQ.
	STAGGERED	STAGG.
	STAINLESS STEEL	SS
	STANDARD	STD.
	STEEL	STL.
	STIFFENER	STIFF.
	STIRRUP	STIR.
	SMOKE DETECTOR	S.D.
	STONE	STN.
	STRAIGHT GRADE	S.G.
	STREET	ST.
	STRUCTURAL	STRUCTL.
	SUPPORT	SUPT.
	SURFACED 4 SIDES	S4S
	SUSPEND	SUSP.
	SYMBOL	SYM.
	SYMMETRICAL	SYMM.
T	TEMPERATURE	TEMP.
	TERAZZO	TERR.
	THICK or THICKNESS	THK.
	TELEPHONE	TEL.
	THRESHOLD	THLD
	TONGUE AND GROOVE	T&G
	TO OF	T.O.
	TOP OF BANK	T.O.B.
	TOP OF CURB	T.O.C.
	TOP OF FINISH	T.O.F.
	TOP OF GRATE	T.G.
	TOP OF JOINT	T.O.J.
	TOP OF MASONRY	T.O.M.
	TOP OF DECK	T.M.D.
	TOP OF PARAPET	T.O.P.
	TOP OF STEEL	TOS / T.O.S.
	TOP OF STRUCTURAL SLAB	T.S.S.
	TOP OF WALL	T.O.W.
	TREAD	T.
	TURNBUCKLE	TRNBKL.
	TYPICAL	TYP.
U	UNIFORM BUILDING CODE	U.B.C.
	UNDER CUT	UC
	UNLESS NOTED OTHERWISE	U.N.O.
V	VINYL COMPOSITION TILE	VCT
	VENTILATOR	VENT.
	VERTICAL	VERT.
	VESTIBULE	VEST.
	VEE JOINT	V.JT.
	VOLUME	VOL.
	VERIFY IN FIELD	VIF
	VINYL WALL COVERING	VWC
	VINYL	VYN
W	WAREHOUSE	WHSE
	WATER CLOSET	WC
	WATER HEATER	W.H.
	WATERPROOF or WATERPROOFING	WP
	WATER RESISTANT	WR
	WEIGHT	WT.
	WELDED WIRE FABRIC	WWF
	WIDE FLANGE (STEEL)	W
	WEST	W.
	WITH	W/
	WOOD	WD.
Y	YARD	YD.

EARTHWORKS
- EARTH/COMPACT FILL
- POROUS FILL/GRAVEL
- ROCK

CONCRETE
- CAST-IN-PLACE/ PRECAST
- LIGHTWEIGHT
- SAND/MORTAR/ PLASTER/CUT STONE

MASONRY
- ADOBE/RAMMED EARTH
- COMMON/FACE
- FIRE BRICK
- CONCRETE BLOCK
- GYPSUM BLOCK
- STRUCTURAL FACING TILE

STONE
- BLUESTONE/SLATE/ SOAPSTONE/ FLAGGING
- RUBBLE
- MARBLE

METAL
- ALUMINUM
- BRASS/BRONZE
- STEEL/ OTHER METALS

WOOD
- FINISH
- ROUGH
- BLOCKING
- HARDBOARD
- PLYWOOD - LARGE SCALE
- PLYWOOD - SMALL SCALE

GLASS
- GLASS
- STRUCTURAL
- GLASS BLOCK

INSULATION
- BATT/LOOSE FILL
- RIGID
- SPRAY/FOAM

FINISHES
- ACOUSTICAL TILE
- CERAMIC TILE - LARGE SCALE
- CERAMIC TILE - SMALL SCALE
- CARPET AND PAD
- GYPSUM WALLBOARD
- METAL LATH AND PLASTER
- PLASTIC
- RESILIENT FLOORING/ PLASTIC LAMINATE
- TERRAZZO

PLAN AND SECTION INDICATIONS
- CONCRETE MASONRY BLOCK
- METAL/WOOD STUD
- BRICK

PARTITION INDICATIONS
- BRICK
- CERAMIC TILE
- CONCRETE/PLASTER
- GLASS
- SHEET METAL
- SHINGLES/SIDING

ELEVATION INDICATIONS

MATERIALS KEY
1/2" = 1'-0"

VIEW TITLE MARK

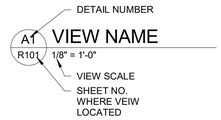

DETAIL TITLE MARK

1	VIEW NAME
1/8" = 1'-0"	R/ R101

EXTERIOR ELEVATION

INTERIOR ELEVATION

SECTION FLAG

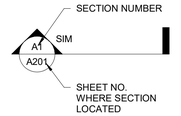

DETAIL REFERENCE

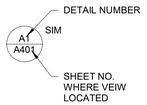

BLOW-UP DETAIL REFERENCE

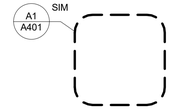

COLUMN GRID LINES

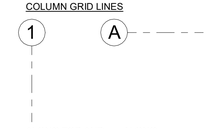

VERTICAL ELEVATION

CONTROL POINT

SPOT ELEVATIONS

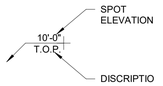

ROLL-UP DOOR SYM.

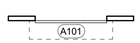

DOOR IDENTIFICATION

WINDOW IDENTIFICATION

ROOM IDENTIFICATION

ROOM
101
150 SF

CEILING HEIGHT

1i
1'-0" A.F.F.

VIEW REFERENCE

A1 / A101

WALL TAG

KEYNOTE

REVISION TAG

NOTE CALL-OUTS

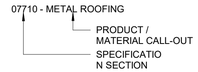

NORTH ELEVATION (FOR REFER. ONLY)

GRAPHIC SCALE

EXIT SIGN

FIRE ALARM PULL

FIRE EXTINGUISHER CABINET

DOOR TYPE

VIEW NAME
1

WINDOW TYPE

VIEW NAME
1

SYMBOLS KEY
1/8" = 1'-0"

THE CITY OF LOS ANGELES OR ITS OFFICERS OR AGENTS SHALL NOT BE RESPONSIBLE FOR THE ACCURACY OR COMPLETENESS OF ELECTRONIC COPIES OF THIS PLAN SHEET.

FILE PATH: A360://Studio City Recreation Center/SCRC-Project Model_Central_Final.rvt

SHEET ISSUE DATE:08/02/17

REVISION DATES: (DESIGN STAGE ONLY)

CITY OF LOS ANGELES
DEPARTMENT OF PUBLIC WORKS
BUREAU OF ENGINEERING

ENGINEERING
CITY OF LOS ANGELES

NO.	REVISION DESCRIPTION	DATE	BY

BUILDING NO. -

INDEX NO. RP-300106

LICENSED ARCHITECT TED ALLEN C. 23333 RENEWAL 08/31/2019 STATE OF CALIFORNIA

CITY ENGINEER	DATE:		
TED ALLEN, PE	1-24-2019		
ARCHITECTURAL DIVISION	LIC. NO.: C 23333		
ARCHITECT: ROBERT LOMELIN			
DESIGNED BY:	Z. AKHTER, M. CHAVARRIA, A. KIM, M. LAM	1-24-2019	
DRAWN BY:	Z. AKHTER, M. CHAVARRIA, A KIM	1-24-2019	
CHECKED BY:	ROBERT LOMELIN	1-24-2019	
APPROVED BY:	MAHMOOD KARIMZADEH,AIA, DEPUTY CITY ENGINEER	1-24-2019	

CLIENT: DEPARTMENT OF RECREATION AND PARKS
GENERAL MANAGER: MICHAEL A. SHULL

SHEET TITLE: SYMBOLS AND ABBREVIATIONS

PROJECT: STUDIO CITY RECREATION CENTER

ADDRESS: 12621 RYE STREET, STUDIO CITY, CA 91604

BUREAU OF ENGINEERING OFFICIAL RECORD

WORK ORDER NO. E170267B

PLAN FILE NO. 860

DRAWING NO. A002

SHEET 56 OF SHEETS 211

PLOTTED:7/1/2019 11:24:55 AM

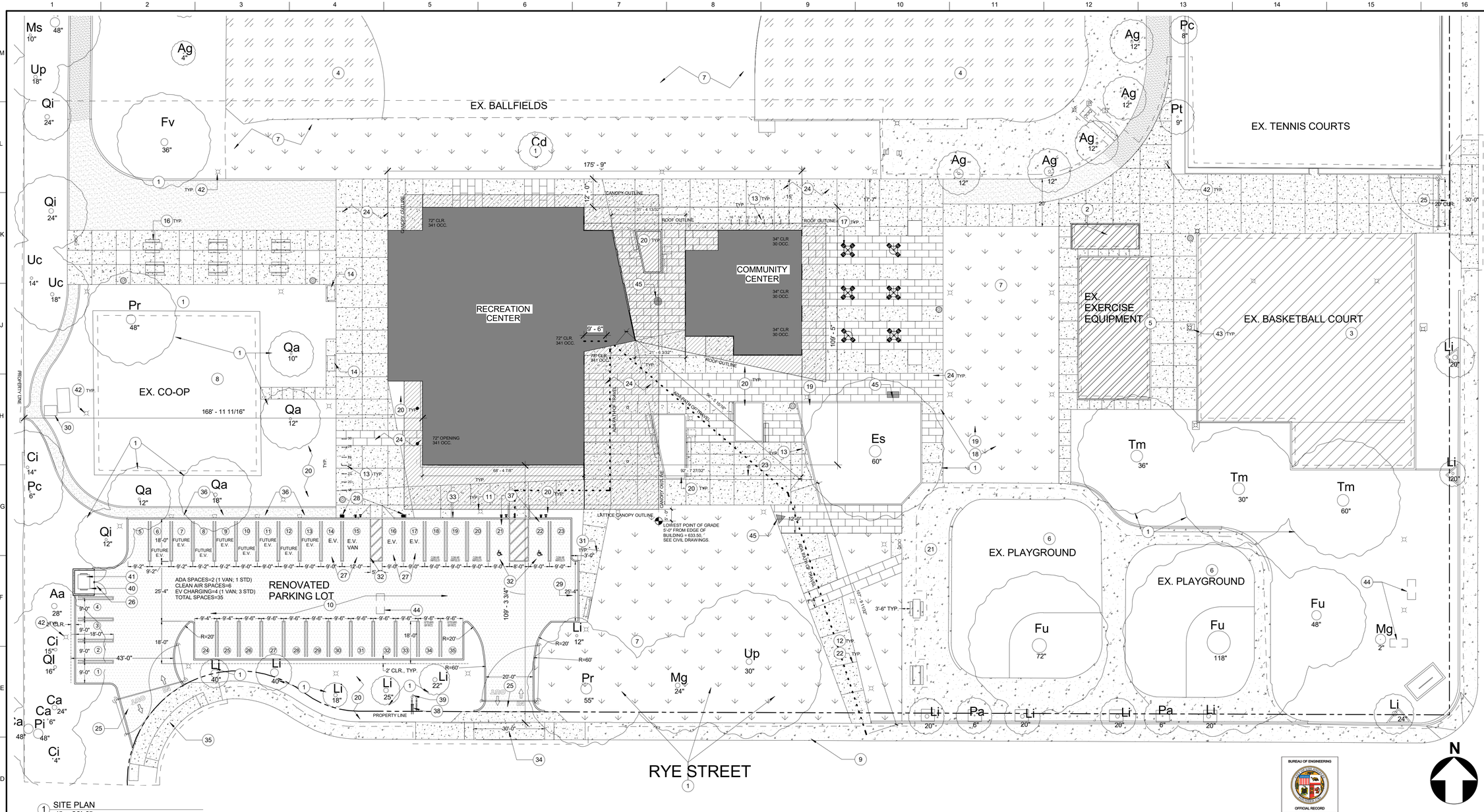

1 SITE PLAN
1" = 20'-0"

KEYNOTES:

1 (E) TREE TO BE PROTECTED, REFER TO TREE PROTECTION PLAN IN L101/L102

2 (E) EXERCISE EQUIPMENT, PROTECT IN PLACE

3 (E) BASKETBALL COURTS, PROTECT IN PLACE

4 (E) SPORTS FIELD, PROTECT IN PLACE

5 (E) EXERCISE RING ON SAND, PROTECT IN PLACE

6 (E) PLAY AREA TO REAMIN, PROTECT IN PLACE

7 (E) TURF AREA, PROTECT IN PLACE.

8 (E) CO-OP AREA, PROTECT IN PLACE

9 (E) SIDEWALK, PROTECT IN PLACE

10 (N) AC PAVING, SEE L401

11 (N) LIGHT POLE, SEE ELECTRICAL

12 (N) CONCRETE PAVING, SEE L401

13 (N) BIKE RACKS, SEE L401

14 (N) 3 LONG TERM BIKE PARKING, SEE L701

16 (N) PICNIC TABLE, TYP. SEE L401

17 (N) ROUND TABLE CHAIR W/ 1 DESIGNATED ADA COMPLIANT SPACE, TYP. SEE L401

18 (N) CONCRETE SWALE BRIDGE, SEE L401

19 (N) 1' DEEP BIO SWALE, SEE L401

20 (N) PLANTING AREA, SEE L401

21 (E) CONCRETE PAVING, PROTECT IN PLACE.SEE LANDSCAPE

22 CONTROL JOINT, SEE L401

23 (N) FLAG POLE, SEE L401

24 (N) COLORED CONCRETE PAVING, SEE L401

25 (N) RINO GATE, SEE L401

26 (N) TRASH ENCLOSURE, SEE A520. REQUIRES SEPERATE PERMIT

27 (N) ELECTRIC VEHICLE CHARGING STATION, SEE J1/L404 FOR STRIPPING DETAIL. SEE ELECTRICAL FOR LEVEL II AND LEVEL III CHARGER SPECIFICATION

28 (N) 2 ELECTRIC VEHICLE CHARGERS, SEE L401

29 (N) 6" CONCRETE CURB, SEE L401

30 (E) BACKFLOW PREVENTER/ FENCING TO REMAIN, PROTECT IN PLACE

31 (N ADA BENCH, SEE L401

32 (N) ADA PARKING SPACE, SEE A1/L403

33 (N) CURB RAMP PER CITY STANDARD PLAN S-442-5, DETAIL2. W=7.25'. SEE L401

34 (N) DRIVEWAY PER CITY STANDARD PLAN S-440-4, CASE 2, W=20'. SEE L401

35 (E) DRIVEWAY. PROTECT IN PLACE. SEE L401

36 FUTURE ELECTRIC VEHICLE CHARGING STATION LOCATION. LOCATE CONDUIT WITHIN 1' OF THE CURB. EV CAPABLE.

37 (N) ADA PARKING, SEE A1/L403 FOR STRIPING DETAIL

38 (N) DOMESTIC BACKFLOW PREVENTER/FIRE BACKFLOW PREVENTER, SEE CIVIL DRAWINGS

39 FIRE DEPARTMENT CONNECTION, SEE C400

40 (N) DESIGNATED RECYCLING BIN WITH COVER, SEE A530

41 (N) DESIGNATED TRASH BIN WITH COVER, SEE A530

42 (N) NEW SITE LIGHT POLE, SEE LIGHTING PLAN IN E2.1

43 (E) EXISTING SITE LIGHT POLE. PROTECT IN PLACE

44 (N) UNDERGROUND DRYWELL SYSTEM. SEE CIVIL DWGS

45 (N) ART SCULPTURE W/ CONCRETE BASE. CONTRACTOR TO FACILITATE AND COORDINATE ART COMPONENT INSTALLATION WITH ARTIST.

SITE PLAN LEGEND

- LIMIT OF GRADING, LANDSCAPING, & IRRIGATION WORK
- LIMIT OF DEDUCT ALTERNATE WORK
- PATH OF TRAVEL, MAX SLOPE 1:20, MAX CROSS SLOPE 1:48, SEE CIVIL
- POLE MOUNTED ACCESSIBILITY SIGN, SEE A5/L403
- POLE MOUNTED TOW AWAY SIGN, SEE A5/L403
- SITE LIGHTING, SEE ELECTRICAL

PARKING SUMMARY (SEE G002 FOR ADDITIONAL PARKING BREAKDOWN)
TOTAL PARKING PROVIDED 35 STANDARD
ADA PARKING PROVIDED: 2 SPACES
EV PARKING PROVIDED: 4 SPACES (1 VAN ACCESSIBLE + 3 STANDARD)
ADDITIONAL FUTURE EV PARKING STALLS PROVIDED 6
LOW EMMITTING-FUEL EFFICIENT PARKING PROVIDED 3

GENERAL NOTES:
1. A SEPERATE ELECTRICAL PLAN CHECK IS REQUIRED TO VERIFY THE RACEWAY METHOD(S), WIRING SCHEMATICS AND ELECTRICAL CALCULATIONS FOR THE ELECTRICAL CHARGING SYSTEM. THE ELECTRICAL SYSTEM SHALL HAVE SUFFICIENT CAPACITY TO SIMULTANEOUSLY CHARGE ALL ELECTRIC VEHICLES AT THEIR FULL AMPERAGE.
2. THE SERVICE PANEL OR SUBPANELS(S) SHALL HAVE SUFFICIENT CAPACITY TO ACCOMMODATE THE RQUIRED NUMBER OF DEDICATED 40 AMPERE MINIMUM BRANCH CIRCUIT(S) FOR THE FUTURE INSTALLATION OF THE EVSE.
3. BUILDING IS NOT EXPOSED TO A NOISE LEVEL OF 65 dB Leg-1HR DURING ANY HR. OF OPERATION

BEEMAN AVENUE

BUREAU OF ENGINEERING OFFICIAL RECORD

THE CITY OF LOS ANGELES OR ITS OFFICERS OR AGENTS SHALL NOT BE RESPONSIBLE FOR THE ACCURACY OR COMPLETENESS OF ELECTRONIC COPIES OF THIS PLAN SHEET.

FILE PATH: A360://Studio City Recreation Center/SCRC-Project Model_Central_Final.rvt

SHEET ISSUE DATE: 08/10/16

REVISION DATES (DESIGN STAGE ONLY)

DEPARTMENT OF PUBLIC WORKS
BUREAU OF ENGINEERING
CITY OF LOS ANGELES
ENGINEERING
CITY OF LOS ANGELES

NO.	REVISION DESCRIPTION	DATE	BY

BUILDING NO. -
INDEX NO. RP-300106

LICENSED ARCHITECT TED ALLEN No. C 23333 RENEWAL 08/31/2021 STATE OF CALIFORNIA

CITY ENGINEER: DATE:
TED ALLEN, PE 1-24-2019
ARCHITECTURAL DIVISION
LIC. NO.: C 23333
ARCHITECT: ROBERT LOMELIN
DESIGNED BY: Z. AKHTER, M. CHAVARRIA, A. KIM, M. LAM
DRAWN BY: Z. AKHTER, M. CHAVARRIA, A. KIM
CHECKED BY: ROBERT LOMELIN
APPROVED BY:MAHMOOD KARIMZADEH-AIA, DEPUTY CITY ENGINEER
CITY ENGINEER 1-24-2019

CITY OF LOS ANGELES
DEPARTMENT OF RECREATION AND PARKS
CLIENT: DEPARTMENT OF RECREATION AND PARKS
GENERAL MANAGER: MICHAEL A. SHULL

SHEET TITLE: SITE PLAN

PROJECT: STUDIO CITY RECREATION CENTER

ADDRESS: 12621 RYE STREET, STUDIO CITY, CA 91604

WORK ORDER NO. E170267B
PLAN FILE NO. 860
DRAWING NO. A010
SHEET 57 OF SHEETS 211

PLOTTED:7/1/2019 11:25:01 AM

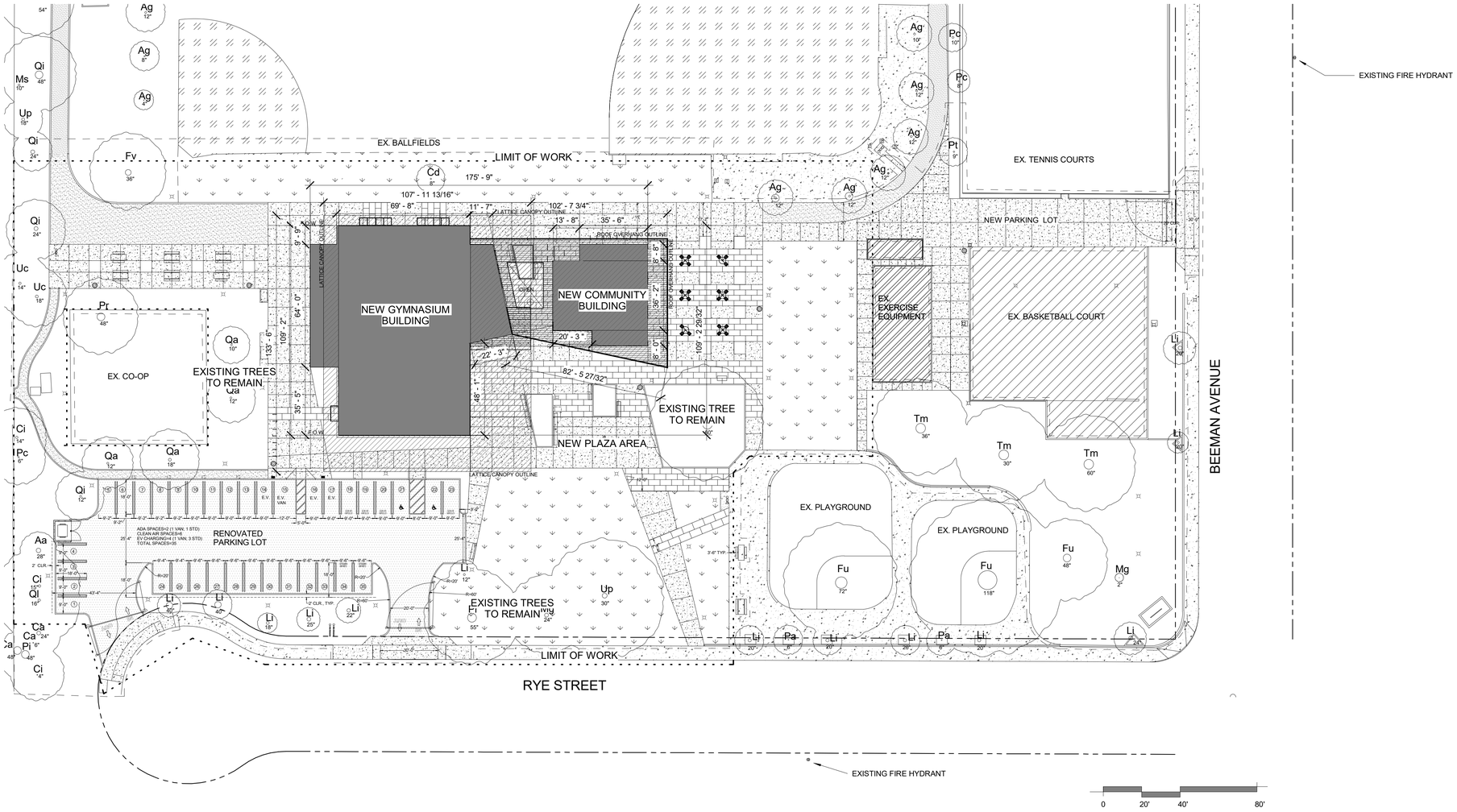

1 PLOT PLAN
1" = 30'-0"

AREA CALCULATION SUMMARY:

BUILDING CODE DEFINED AREA: 15,078 SQUARE FEET (INCLUDING OVERHANG)

ZONING CODE DEFINED BUILDING AREA: 11,577 SQUARE FEET (EXCLUDING OVERHANG)

SCHOOL FEE- GROSS AREA: 11,577 SQUARE FEET
EXEMPT. SEE LETTER ATTACHED ON G007.

BUREAU OF ENGINEERING
OFFICIAL RECORD

THE CITY OF LOS ANGELES OR ITS OFFICERS OR AGENTS SHALL NOT BE RESPONSIBLE FOR THE ACCURACY OR COMPLETENESS OF ELECTRONIC COPIES OF THIS PLAN SHEET.

FILE PATH: A360://Studio City Recreation Center/SCRC-Project Model_Central_Final.rvt

SHEET ISSUE DATE: 09/11/18

REVISION DATES (DESIGN STAGE ONLY)

DEPARTMENT OF PUBLIC WORKS
BUREAU OF ENGINEERING
CITY OF LOS ANGELES

NO.	REVISION DESCRIPTION	DATE	BY

BUILDING NO. -

INDEX NO. **RP-300106**

LICENSED ARCHITECT TIMOTHY L. LOMELIN No. 23333 REGISTERED STATE OF CALIFORNIA

CITY ENGINEER DATE:

TED ALLEN, PE 1-24-2019
ARCHITECTURAL DIVISION
ARCHITECT: ROBERT LOMELIN LIC. NO.: C 23333 1-24-2019
DESIGNED BY: Z. AKHTER, M. CHAVARRIA, A. KIM, M. LAM 1-24-2019
DRAWN BY: Z. AKHTER, M. CHAVARRIA, A. KIM 1-24-2019
CHECKED BY: ROBERT LOMELIN 1-24-2019
APPROVED BY:MAHMOOD KARIMZADEH-AIA, DEPUTY CITY ENGINEER 1-24-2019

CITY OF LOS ANGELES
CLIENT: DEPARTMENT OF RECREATION AND PARKS
GENERAL MANAGER: MICHAEL A. SHULL

SHEET TITLE: PLOT PLAN

PROJECT: STUDIO CITY RECREATION CENTER

ADDRESS: 12621 RYE STREET, STUDIO CITY, CA 91604

WORK ORDER NO. E170267B
PLAN FILE NO. 860
DRAWING NO. A011
SHEET 58 OF SHEETS 211

PLOTTED:7/1/2019 11:25:07 AM

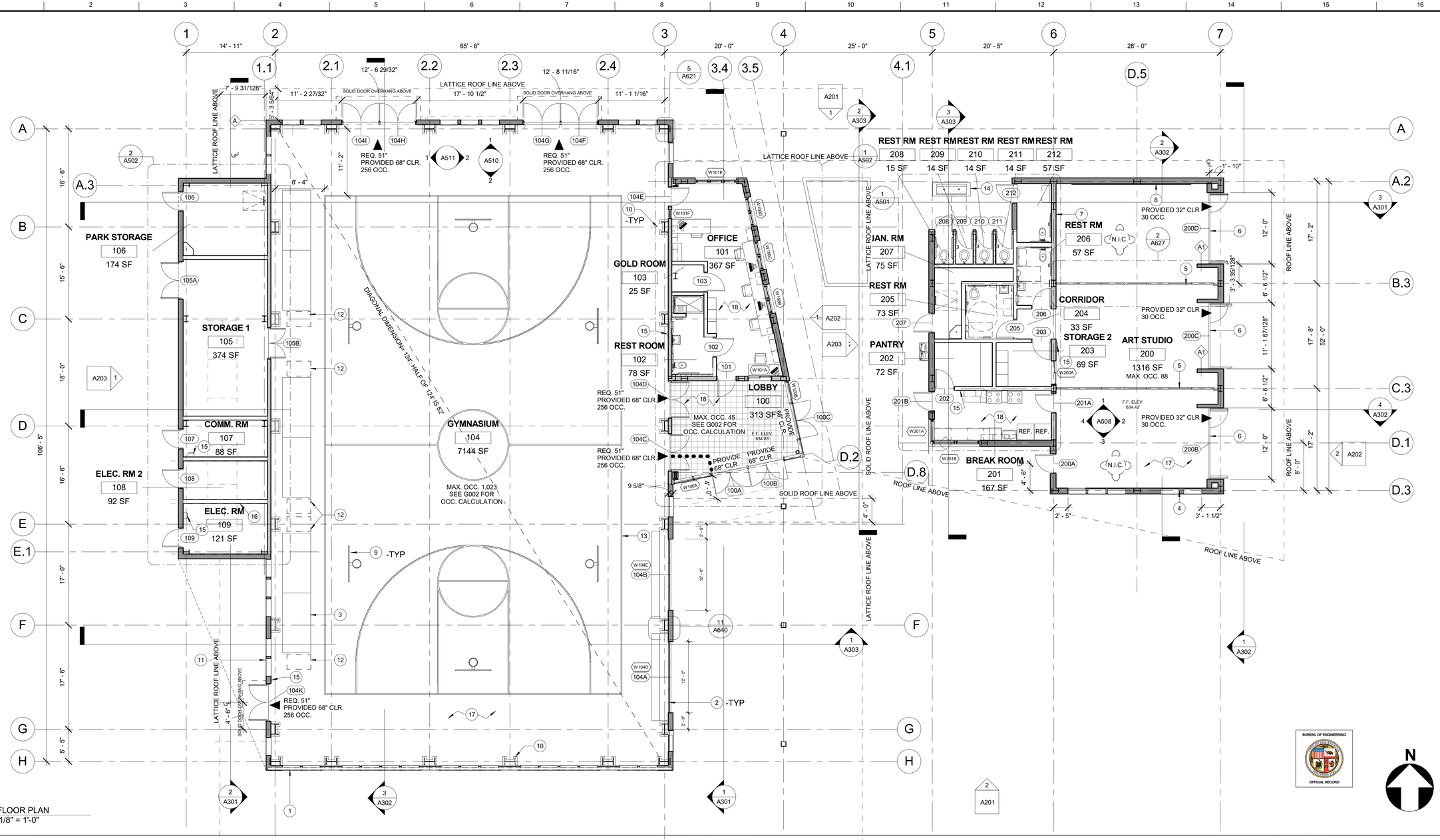

1 FLOOR PLAN
1/8" = 1'-0"

KEYNOTES:

1 CURTAIN WALL SYSTEM, CONTRACTOR TO PULL SEPERATE PERMIT

2 OVERHEAD FOLD GLAZED DOOR

3 BLEACHER SEATING, PROVIDE DESIGNATED CLEAR AREA FOR ACCECIBLE SEATING

4 STOREFRONT SYSTEM, CONTRACTOR TO PULL SEPERATE PERMIT

5 CONTINOUSLY HINGED ELECTRIC ROOM DIVIDER, SEE DETAILS IN SHEET A627

6 RETRACTABLE FOLDING DOOR, SEE DETAILS IN A633

7 FULL HEIGHT CABINET

8 WALL " GLASSLESS" MIRROR, SEE DETAIL 6/A626

9 FORWARD FOLD- BASKETBALL BACKSTOP

10 COLUMN PADDING, SEE DETAIL 1/A621

11 NATURAL VENTILATION SYSTEM, SEE STRUCTURAL FOR FRAMING DETAIL

12 PROVIDE 30 X 48 WHEEL CHAIR ACCESSIBLE AREA. PROVIDE SIGNAGE

13 HIGH SCHOOL REGULATION SIZE BASKET BALL COURT

14 OUTDOOR SINK, SEE A628

15 FIRE EXTINGUISHER CABINET- RECESSED @ PUBLIC AREAS

16 DEDICAT WALL AREA FOR METERING EQUIPMENT, SOLAR LOAD CENTER PANEL.

17 FSC CERTIFIED WOOD FLOOR

18 TILE FLOOR

WALL LEGEND:

FULL HEIGHT METAL STUD WALL W/ R19 BATT INSULATION & CENTRIA-FORMAWALL SERIES 3"-T VERTICAL INSULATED MTL. PANEL ON THE EXT. SPACE MTL. STUDS @ 16" O.C. AND AS REQUIRED FOR PANEL SUPPORT. PROVIDE 5/8" GYP. BD. OVER PHASE CHANGE MATERIAL ON INTERIOR SIDE OF WALL. MIN. STC 40.

FULL HEIGHT METAL STUD WALL@ 16" O.C., W/ R19 BATT INSULATION & 5/8" TYPE X GYP. BD. ON BOTH SIDES OF WALL, HORIZONTALLY BRACE TO STRUCTURAL BEAMS @ MAX. 10' VERTICAL SPACING. INSTALL CENTRIA-FORMAWALL SERIES 3"-T VERTICAL INSULATED MTL. PANEL WHEN WALL IS EXT. AND PROVIDE MTL. STUDS AS REQUIRED FOR PANEL SUPPORTPHASE CHANGE MATERIAL ON EXTERIOR WALLS ONLY. MIN. STC 40. 1-HR RATED WALL. DEMISING WALL (G.A FILE NO. WP 1023)

FULL HEIGHT METAL PARTITION STUD WALL @ 16" O.C. W/ 5/8" GYP. BD. ON BOTH SIDES OF WALL. MIN. STC 40.

LOW METAL STUD WALL @ -- O.C., 4' HIGH; W/ INSULATED METAL PANEL ON THE EXTERIOR AND 5/8" TYPE X GYP BD ON THE INT. PROVIDE PHASE CHANGE MATERIAL. MIN. STC 40.

WALL TYPES: SEE A520

GENERAL NOTES:

1. REFER TO MECHANICAL, PLUMBING AND ELECTRICAL DRAWINGS FOR ADDITIONAL INFORMATION
2. SEE A520 AND 521 FOR WALL TYPE DETAIL
3. SEE GENERAL SHEET G105 FOR COUNTER TOP REQUIREMENTS
4. SEE GENERAL SHEET G108 FOR DOOR ACCESS REQUIREMENTS.
5. SEE GENERAL SHEETS G109 & G1.10 FOR WATER CLOSET AND URINAL REQUIREMENTS
6. SEE GENERAL SHEET G1.13 FOR KITCHEN LAYOUT REQUIREMENTS.
7. SEPERATE PERMITS REQUIRED BUT NOT LIMITED TO. SEE SPECIFICATION FOR ADDITIONAL PERMITS
   A. CURTAIN WALL SYSTEM
   B. STOREFRONT SYSTEM
   C. TRASH ENCLOSURE
8. SEE ELECTRICAL FOR PUBLIC ANNOUNCEMENT(PA) SYSTEM LOCATIONS AND TYPES

THE CITY OF LOS ANGELES OR ITS OFFICERS OR AGENTS SHALL NOT BE RESPONSIBLE FOR THE ACCURACY OR COMPLETENESS OF ELECTRONIC COPIES OF THIS PLAN SHEET.

FILE PATH: A360://Studio City Recreation Center/SCRC-Project Model_Central_Final.rvt

SHEET ISSUE DATE: 10/11/16

REVISION DATES (DESIGN STAGE ONLY)

BUREAU OF ENGINEERING

ENGINEERING
CITY OF LOS ANGELES

NO.	REVISION DESCRIPTION	DATE	BY

BUILDING NO. -

INDEX NO. RP-300106

LICENSED ARCHITECT — TED ALLEN — No. C-23333 — REGISTERED — STATE OF CALIFORNIA

DEPARTMENT OF PUBLIC WORKS
CITY OF LOS ANGELES

TED ALLEN, PE	CITY ENGINEER	DATE:
ARCHITECTURAL DIVISION	LIC. NO.: C 23333	1-24-2019
ARCHITECT: ROBERT LOMELIN		1-24-2019
DESIGNED BY: Z. AKHTER, M. CHAVARRIA, A. KIM, M. LAM		1-24-2019
DRAWN BY: Z. AKHTER, M. CHAVARRIA, A. KIM		1-24-2019
CHECKED BY: ROBERT LOMELIN	DEPUTY CITY ENGINEER	1-24-2019
APPROVED BY:MAHMOOD KARIMZADEH,AIA, DEPUTY CITY ENGINEER		

CLIENT: DEPARTMENT OF RECREATION AND PARKS
GENERAL MANAGER: MICHAEL A. SHULL

SHEET TITLE: FLOOR PLAN

PROJECT: STUDIO CITY RECREATION CENTER

ADDRESS: 12621 RYE STREET, STUDIO CITY, CA 91604

WORK ORDER NO. E170267B

PLAN FILE NO. 860

DRAWING NO. A101

SHEET 59 OF SHEETS 211

BUREAU OF ENGINEERING OFFICIAL RECORD

PLOTTED:7/1/2019 11:25:15 AM

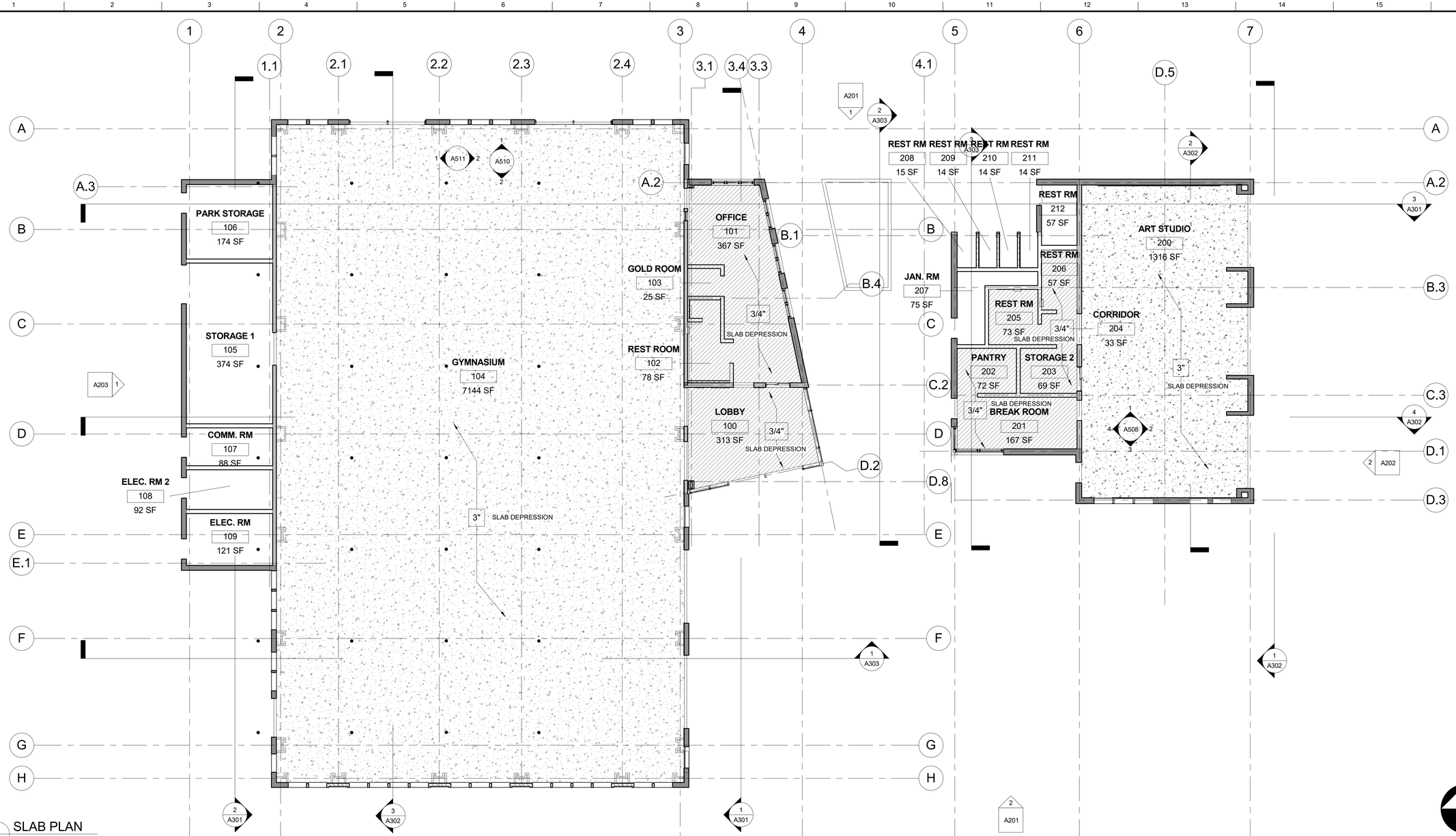

1 SLAB PLAN
A201
1/8" = 1'-0"

THE CITY OF LOS ANGELES OR ITS OFFICERS OR AGENTS SHALL NOT BE RESPONSIBLE FOR THE ACCURACY OR COMPLETENESS OF ELECTRONIC COPIES OF THIS PLAN SHEET.

FILE PATH: A360://Studio City Recreation Center/SCRC-Project Model_Central_Final.rvt

SHEET ISSUE DATE: 10/12/16

REVISION DATES (DESIGN STAGE ONLY)

BUREAU OF ENGINEERING
OFFICIAL RECORD

CITY OF LOS ANGELES
DEPARTMENT OF PUBLIC WORKS
BUREAU OF ENGINEERING

ENGINEERING
CITY OF LOS ANGELES

NO.	REVISION DESCRIPTION	DATE	BY

BUILDING NO. -

INDEX NO. RP-300106

LICENSED ARCHITECT TED ALLEN, PE C-30333 RENEWAL 08/31/2019 STATE OF CALIFORNIA

CITY ENGINEER

		DATE:
TED ALLEN, PE	ARCHITECTURAL DIVISION	1-24-2019
ARCHITECT: ROBERT LOMELIN	LIC. NO.: C 23333	1-24-2019
DESIGNED BY: Z. AKHTER, M. CHAVARRIA, A. KIM, M. LAM		1-24-2019
DRAWN BY: Z. AKHTER, M. CHAVARRIA, A. KIM		1-24-2019
CHECKED BY: ROBERT LOMELIN		1-24-2019
APPROVED BY:MAHMOOD KARIMZADEH,AIA, DEPUTY CITY ENGINEER		

CLIENT: DEPARTMENT OF RECREATION AND PARKS
GENERAL MANAGER: MICHAEL A. SHULL

SHEET TITLE: SLAB PLAN

PROJECT: STUDIO CITY RECREATION CENTER

ADDRESS: 12621 RYE STREET, STUDIO CITY, CA 91604

WORK ORDER NO. E170267B
PLAN FILE NO. 860
DRAWING NO. A102
SHEET 60 OF SHEETS 211

PLOTTED:7/1/2019 11:25:19 AM

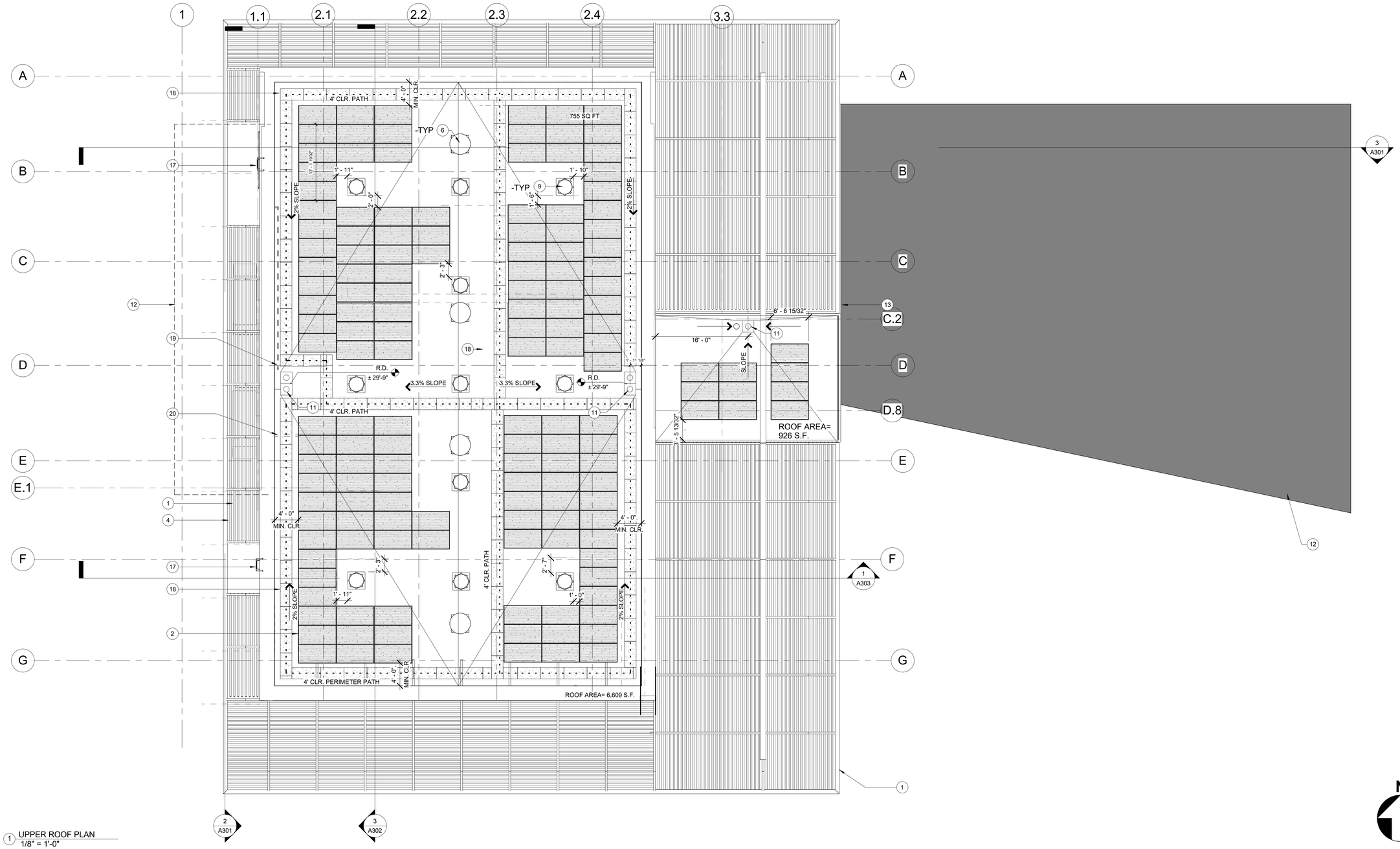

1 UPPER ROOF PLAN
1/8" = 1'-0"

ROOF PLAN KEYNOTES:

1 SHADE CANOPY, SEE STRUCTURAL DRAWINGS

2 SOLAR PHOTOVOLTAIC ARRAY PER ELECTRICAL REQUIREMENT FOR NET-ZERO, SEE SHEET A634 AND STRUCTURAL FOR ATTACHMENT DETAIL. OBTAIN SEPERATE PERMIT. QUANTITY AND OUTPUT REQUIRED PER ELECTRICAL SPECIFICATION.

3 ROOF LINE ABOVE, SEE A103

4 VERTICAL SUN SHADE PER STRUCTURAL

5 12" C-CHANNEL

6 43" DIAMETER WIND CATCHER, SEE MECHANICAL

7 23" DIAMETER WIND CATCHER, SEE MECHANICAL

8 STRUCTURAL COLUMN, POWDER COATED FINISH

9 SOLATUBE 29" DIAMETER M74DS SERIES. SEE DETAI 2/A633. RR#25251

10 VENTILATOR.SEE MECHANICAL.

11 ROOF DRAIN AND OVERFLOW, SEE DETAIL 4/A632

12 LOWER ROOF BELOW, SEE A104

13 C CHANNEL, SEE DETAIL 2/A6.30

14 SINGLE PLY MEMBRANE ROOFING OVER MIN. R-30 RIGID INSULATION. MIN. STC 40. SEE ADDITIONAL NOTE #2

15 PAINTED ALUMINUM COPING

16 MECHANICAL EQUIPMENT, SEE MECHANICAL DWG

17 EXTERIOR LADDER. SEE A631

18 2'x4'x1/16" THK PVC ROLL WALKWAY PADS

19 PATHWAY FOR FUTURE PLUMBING LINE FROM THE SOLAR ZONE TO THE WATER-HEATING SYSTEM. CAP CONDUIT END. PROJECT DOES NOT HAVE ANY CENTRAL WATER HEATING SYSTEM.

20 ROUTING PATH FROM THE SOLAR ZONE TO THE MAIN SERVICE PANEL. INVERTERSAND METERING EQUIPMENT ARE LOCATED IN THE ELECTRICAL ROOM

21 ROOF HATCH.SEE A631.

ADDITIONAL CODE RELATED NOTES:

1. ROOF AREA:
-UPPER ROOF= 7,535 S.F. (626+758)
-LOWER ROOF= 6,248 S.F. (5,377+871)

TOTAL ROOF AREA= 13,783 S.F.
15% OF ROOF AREA= 2,067.45 S.F.

SOLAR PANELS PROVIDED= APPROX. 4,000 S.F.
MAIN SERVICE PANEL AND INVERTER LOCATED IN ELECTRICAL ROOM 109

2. **SURFACE-BURNING CHARACTERISTICS. PER 2603.3** UNLESS OTHERWISE INICATED IN THIS SECTION, FOAM PLASTIC INSULATION AND FOAM PLASTIC CORES OF MANUFACTURES ASSEMBLIES SHALL HAVE A FLAME SPREAD INDEX OF NOT MORE THAN 75 AND A SMOKE-DEVELOPED INDEX OF NOT MORE THAN 450 WHERE TESTED IN THE MAXIMUM THICKNESS INTENDED FOR USE IN ACCORDANCE WITH ASTM E84 OR UL 723. LOOSE FILL-TYPE FOAM PLASTIC INSULATION SHALL BE TESTED AS BOARD STOCK FOR THE FLAME SPREAD AND SMOKE-DEVELOPED INDEXES.

3. TYPE IIIB- ROOF MEMBRANE CLASSIFICATION MUST BE CLASS C MINIMUM.

4. ALL ROOF DRAINS CONNECT TO DRYWELL.

BUREAU OF ENGINEERING
OFFICIAL RECORD

N

THE CITY OF LOS ANGELES OR ITS OFFICERS OR AGENTS SHALL NOT BE RESPONSIBLE FOR THE ACCURACY OR COMPLETENESS OF ELECTRONIC COPIES OF THIS PLAN SHEET.

FILE PATH: A360://Studio City Recreation Center/SCRC-Project Model_Central_Final.rvt

SHEET ISSUE DATE: 10/12/16

REVISION DATES: (DESIGN STAGE ONLY)

DEPARTMENT OF PUBLIC WORKS
BUREAU OF ENGINEERING
CITY OF LOS ANGELES

NO.	REVISION DESCRIPTION	DATE	BY

BUILDING NO. -

INDEX NO. **RP-300106**

LICENSED ARCHITECT TONY LAM No. C 23333 REGISTERED CALIFORNIA STATE OF CALIFORNIA

CITY ENGINEER	DATE:	
TED ALLEN, PE		1-24-2019
ARCHITECTURAL DIVISION	LIC. NO.: C 23333	1-24-2019
ARCHITECT: ROBERT LOMELIN		1-24-2019
DESIGNED BY: Z. AKHTER, M. CHAVARRIA, A. KIM, M. LAM		1-24-2019
DRAWN BY: Z. AKHTER, M. CHAVARRIA, A. KIM		1-24-2019
CHECKED BY: ROBERT LOMELIN		1-24-2019
APPROVED BY:MAHMOOD KARIMZADEH,AIA, DEPUTY CITY ENGINEER		1-24-2019

CITY OF LOS ANGELES
CLIENT: DEPARTMENT OF RECREATION AND PARKS
GENERAL MANAGER: MICHAEL A. SHULL

SHEET TITLE: UPPER ROOF PLAN

PROJECT: STUDIO CITY RECREATION CENTER

ADDRESS: 12621 RYE STREET, STUDIO CITY, CA 91604

WORK ORDER NO. E170267B

PLAN FILE NO. 860

DRAWING NO. A103

SHEET 61 OF SHEETS 211

PLOTTED:7/1/2019 11:25:25 AM

THE CITY OF LOS ANGELES OR ITS OFFICERS OR AGENTS SHALL NOT BE RESPONSIBLE FOR THE ACCURACY OR COMPLETENESS OF ELECTRONIC COPIES OF THIS PLAN SHEET.

FILE PATH: A360://Studio City Recreation Center/SCRC-Project Model_Central_Final.rvt

SHEET ISSUE DATE: 05/04/17

REVISION DATES (DESIGN STAGE ONLY)

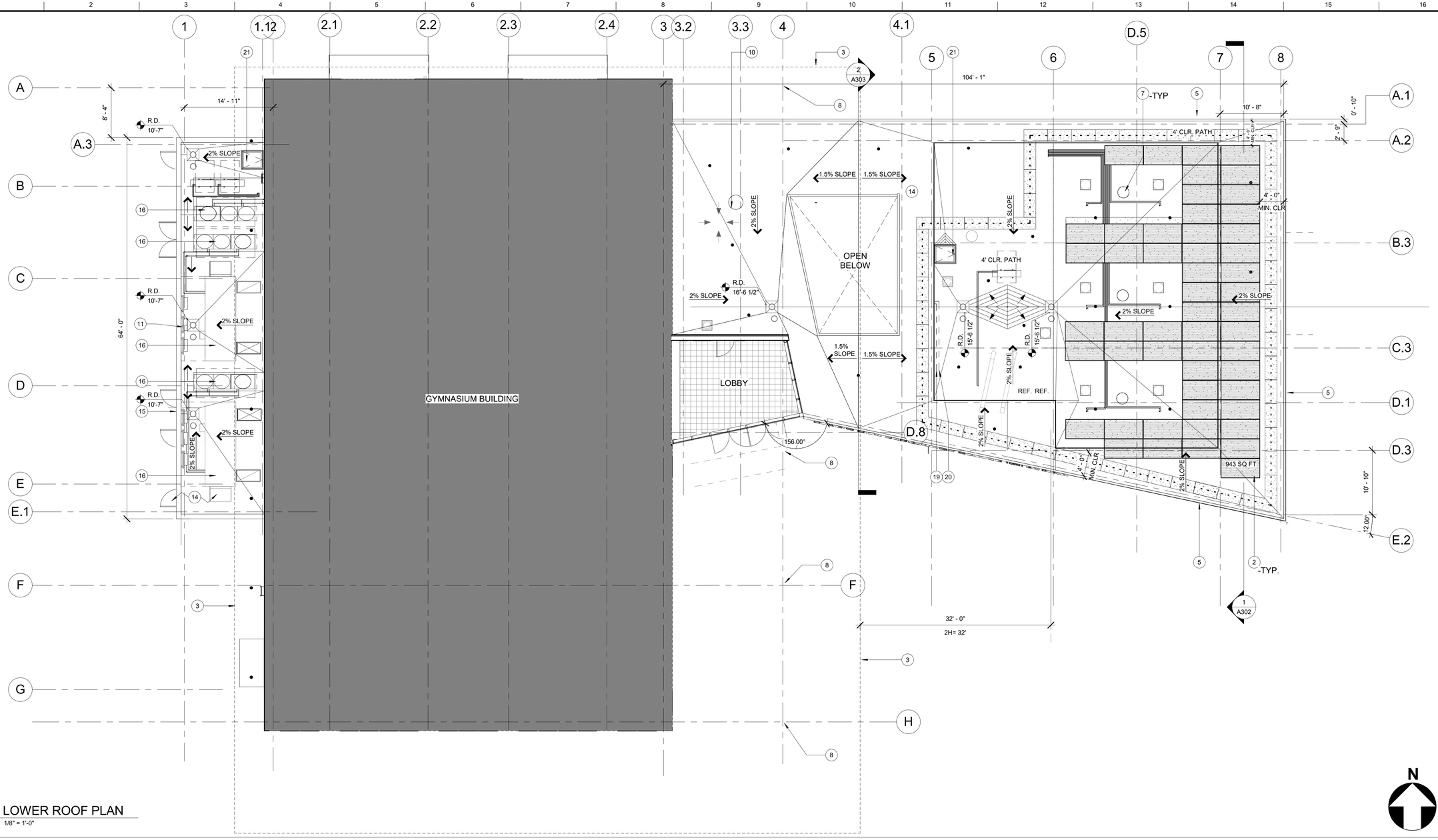

1 A201 LOWER ROOF PLAN
1/8" = 1'-0"

KEYNOTES:

1 SHADE CANOPY, SEE STRUCTURAL DRAWINGS

2 SOLAR PHOTOVOLTAIC ARRAY PER ELECTRICAL REQUIREMENT FOR NET-ZERO, SEE SHEET A634 AND STRUCTURAL FOR ATTACHMENT DETAIL. OBTAIN SEPERATE PERMIT. QUANTITY AND OUTPUT REQUIRED PER ELECTRICAL SPECIFICATION.

3 ROOF LINE ABOVE, SEE A103

4 VERTICAL SUN SHADE PER STRUCTURAL

5 12" C-CHANNEL

6 43" DIAMETER WIND CATCHER, SEE MECHANICAL

7 23" DIAMETER WIND CATCHER, SEE MECHANICAL

8 STRUCTURAL COLUMN, POWDER COATED FINISH

9 SOLATUBE 29" DIAMETER M74DS SERIES. SEE DETAI 2/A633. RR#25251

10 VENTILATOR.SEE MECHANICAL.

11 ROOF DRAIN AND OVERFLOW, SEE DETAIL 4/A632

12 LOWER ROOF BELOW, SEE A104

13 C CHANNEL, SEE DETAIL 2/A6.30

14 SINGLE PLY MEMBRANE ROOFING OVER MIN. R-30 RIGID INSULATION. MIN. STC 40. SEE ADDITIONAL NOTE #2

15 PAINTED ALUMINUM COPING

16 MECHANICAL EQUIPMENT, SEE MECHANICAL DWG

17 EXTERIOR LADDER. SEE A631

18 2'x4'x1/16" THK PVC ROLL WALKWAY PADS

19 PATHWAY FOR FUTURE PLUMBING LINE FROM THE SOLAR ZONE TO THE WATER-HEATING SYSTEM. CAP CONDUIT END. PROJECT DOES NOT HAVE ANY CENTRAL WATER HEATING SYSTEM.

20 ROUTING PATH FROM THE SOLAR ZONE TO THE MAIN SERVICE PANEL. INVERTERSAND METERING EQUIPMENT ARE LOCATED IN THE ELECTRICAL ROOM

21 ROOF HATCH.SEE A631.

ADDITIONAL CODE RELATED NOTES:

1. ROOF AREA:
-UPPER ROOF= 7,535 S.F. (626+758)
-LOWER ROOF= 6,248 S.F. (5,377+871)

TOTAL ROOF AREA= 13,783 S.F.
15% OF ROOF AREA= 2,067.45 S.F.

SOLAR PANELS PROVIDED= APPROX. 4,000 S.F.
MAIN SERVICE PANEL AND INVERTER LOCATED IN ELECTRICAL ROOM 109

2. **SURFACE-BURNING CHARACTERISTICS. PER 2603.3** UNLESS OTHERWISE INICATED IN THIS SECTION, FOAM PLASTIC INSULATION AND FOAM PLASTIC CORES OF MANUFACTURES ASSEMBLIES SHALL HAVE A FLAME SPREAD INDEX OF NOT MORE THAN 75 AND A SMOKE-DEVELOPED INDEX OF NOT MORE THAN 450 WHERE TESTED IN THE MAXIMUM THICKNESS INTENDED FOR USE IN ACCORDANCE WITH ASTM E84 OR UL 723. LOOSE FILL-TYPE FOAM PLASTIC INSULATION SHALL BE TESTED AS BOARD STOCK FOR THE FLAME SPREAD AND SMOKE-DEVELOPED INDEXES.

3. TYPE IIIB- ROOF MEMBRANE CLASSIFICATION MUST BE CLASS C MINIMUM.

4. ALL ROOF DRAINS CONNECT TO DRYWELL.

BUREAU OF ENGINEERING
OFFICIAL RECORD

CITY OF LOS ANGELES
DEPARTMENT OF PUBLIC WORKS
BUREAU OF ENGINEERING
ENGINEERING
CITY OF LOS ANGELES

TED ALLEN, PE
CITY ENGINEER

ARCHITECTURAL DIVISION	LIC. NO.- C 23333	DATE: 1-24-2019
ARCHITECT: ROBERT LOMELIN		1-24-2019
DESIGNED BY: Z. AKHTER, M. CHAVARRIA, A. KIM		1-24-2019
DRAWN BY: Z. AKHTER, M. CHAVARRIA, A. KIM		1-24-2019
CHECKED BY: ROBERT LOMELIN		1-24-2019
APPROVED BY:MAHMOOD KARIMZADEH,AIA, DEPUTY CITY ENGINEER		1-24-2019

NO.	REVISION DESCRIPTION	DATE	BY

BUILDING NO. -

INDEX NO. RP-300106

LICENSED ARCHITECT ROBERT LOMELIN LIC. NO. C 23333 RENEWAL 08/31/2019 STATE OF CALIFORNIA

CLIENT: DEPARTMENT OF RECREATION AND PARKS
GENERAL MANAGER: MICHAEL A. SHULL

SHEET TITLE: LOWER ROOF PLAN

PROJECT: STUDIO CITY RECREATION CENTER

ADDRESS: 12621 RYE STREET, STUDIO CITY, CA 91604

WORK ORDER NO. E170267B
PLAN FILE NO. 860
DRAWING NO. A104
SHEET 62 OF SHEETS 211

PLOTTED:7/1/2019 11:25:38 AM

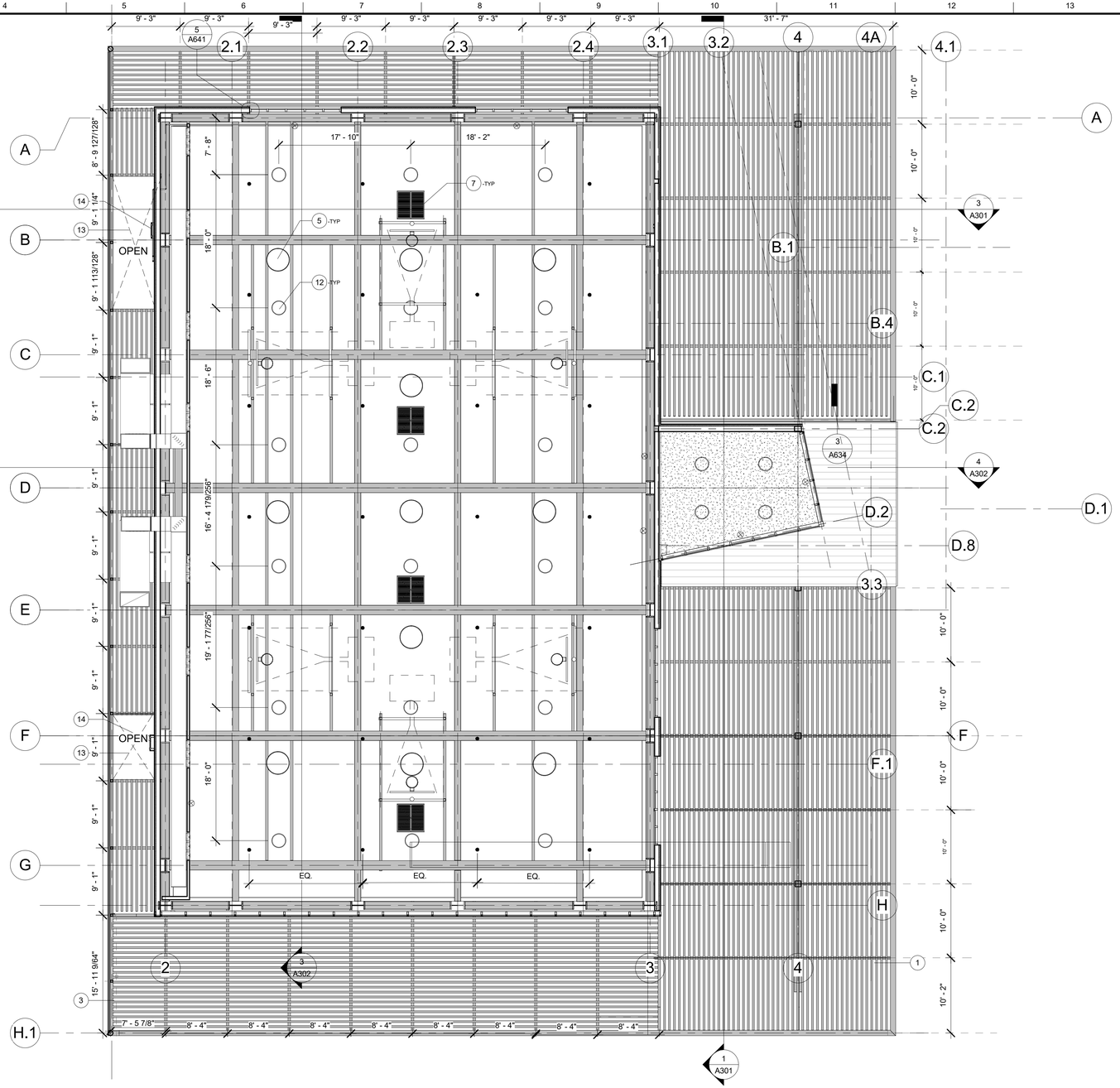

1 GYMNASIUM REFLECTED CEILING PLAN
1/8" = 1'-0"

KEYNOTES:

1 SHADE CANOPY PER STRUCTURAL. PROVIDE LAYOUT FOR STRUCTURAL AND ARCHITECTURAL APPROVAL.

2 COMMUNITY BUILDING SOFFIT.

3 VERTICAL SUNSCREEN

4 PROJECT NAME IN 12" LETTERING. SEE SIGNAGE SCHEDULE

5 SOLATUBE "SKYVAULT" SERIES M74 DS-O (29IN/740 MM DAYLIGHTING SYSTEM)

6 SOLATUBE 750 DS DAYLIGHTING SYSTEM

7 GYMNASIUM WIND CATCHER GRILL, SEE MECHANICAL DWG. COLOR TO MATCH ADJACENT SURFACES

8 COMMUNITY ROOM WIND CATCHER GRILL, SEE MECHANICAL DWG. COLOR TO MATCH ADJACENT SURFACES

9 LIGHTING, SEE ELECTRICAL. CONSEAL ALL JUNCTION BOXES WITHIN CEILING CAVITY.

10 WALL MOUNTED LIGHT, SEE ELECTRICAL

11 LIGHTING, SEE ELECTRICAL

12 CEILING MOUNTED LIGHTING, SEE ELECTRICAL

13 ROOF ACCESS, SEE DET 1/A631 AND 2/A631

14 LADDER, SEE DET 2/631 AND 3/631

15 CEILING MOUNTED DIFFUSER

16 CEILING MOUNTED EXHAUST PER MECHANICAL. COLOR TO MATCH ADJACENT SURFACES.

17 AC VENT. COLOR TO MATCH ADJACENT SURFACE

ELECTRICAL:

- RECESSED DOWNLIGHT FIXTURE
- SOLATUBE
- SURFACE MTD. 1'X4' FLUORESCENT LIGHT FIXTURE
- WALL MOUNTED EXIT SIGN

MECHANICAL:

- WIND CATCHER GRILL
- FIRE PRINKLER HEAD. MAX SPACING 15'. SEE DETAIL

CEILING LEGEND:

- GYPSUM
- EXPOSED METAL DECK
- SOFFIT

SPRINKLER
1/4" = 1'-0"

GENERAL NOTES:

1. REFER TO MECHANICAL, PLUMBING AND ELECTRICAL DRAWINGS FOR ADDITIONAL INFORMATION
2. ELEVATIONS INDICATED ARE FROM FINISH FLOOR TO FINISH FACE OF CEILING SURFACE
3. ALL LIGHT CENTERED WITHIN ROOM OR SPACE, U.N.O.
4. ALL CEILING INTERIOR FINISH MATERIALS SHALL BE TESTED AND SPECIFIED IN ACCORDANCE WITH SECTION 802 FROM CITY OF LOS ANGELES BUILDING CODE.
5. EXIT SIGNS SHALL BE MOUNTED 10' ABOVE FINISH FLOOR PLAN TO BOTTOM OF SIGN
6. CONCEAL ALL JUNCTION BOXES WITHIN CEILING OR WALL CAVITY

FIRE CODE NOTE:
1. PROVIDE FIRE SPRINKLERS THROUGHOUT. THE SPRINKLER SYSTEM SHALL BE APPROVED BY PLUMBING DIV. PRIOR TO INSTALLATION. 12.21A17(d)
2. ALL WALL HANGINGS AND DECORATION SHALL BE NONCOMBUSTABLE OR FLAME RETARDANT TREATED IN AN APPROVED MANNER (L.A.M.C. 57.22)

N

BUREAU OF ENGINEERING
OFFICIAL RECORD

THE CITY OF LOS ANGELES OR ITS OFFICERS OR AGENTS SHALL NOT BE RESPONSIBLE FOR THE ACCURACY OR COMPLETENESS OF ELECTRONIC COPIES OF THIS PLAN SHEET.

FILE PATH: A360://Studio City Recreation Center/SCRC-Project Model_Central_Final.rvt

SHEET ISSUE DATE: 03/29/18

REVISION DATES (DESIGN STAGE ONLY)

BUREAU OF ENGINEERING
ENGINEERING
CITY OF LOS ANGELES

NO. | REVISION DESCRIPTION | DATE | BY

BUILDING NO. –

INDEX NO. RP-300106

LICENSED ARCHITECT TED ALLEN LIC. NO. C 23333 RENEWAL 08/31/2019 STATE OF CALIFORNIA

DEPARTMENT OF PUBLIC WORKS
CITY OF LOS ANGELES

CITY ENGINEER | DATE:
TED ALLEN, PE | 1-24-2019
ARCHITECTURAL DIVISION | LIC. NO.: C 23333
ARCHITECT: ROBERT LOMELIN
DESIGNED BY: Z. AKHTER, M. CHAVARRIA, A. KIM, M. LAM | 1-24-2019
DRAWN BY: Z. AKHTER, M. CHAVARRIA, A. KIM | 1-24-2019
CHECKED BY: ROBERT LOMELIN | 1-24-2019
APPROVED BY: MAHMOOD KARIMZADEH, AIA, DEPUTY CITY ENGINEER | 1-24-2019

CLIENT: DEPARTMENT OF RECREATION AND PARKS
GENERAL MANAGER: MICHAEL A. SHULL

SHEET TITLE: UPPER RELFECTED CEILING PLAN

PROJECT: STUDIO CITY RECREATION CENTER

ADDRESS: 12621 RYE STREET, STUDIO CITY, CA 91604

WORK ORDER NO. E170267B
PLAN FILE NO. 860
DRAWING NO. A105
SHEET 63 OF SHEETS 211

PLOTTED:7/1/2019 11:25:54 AM

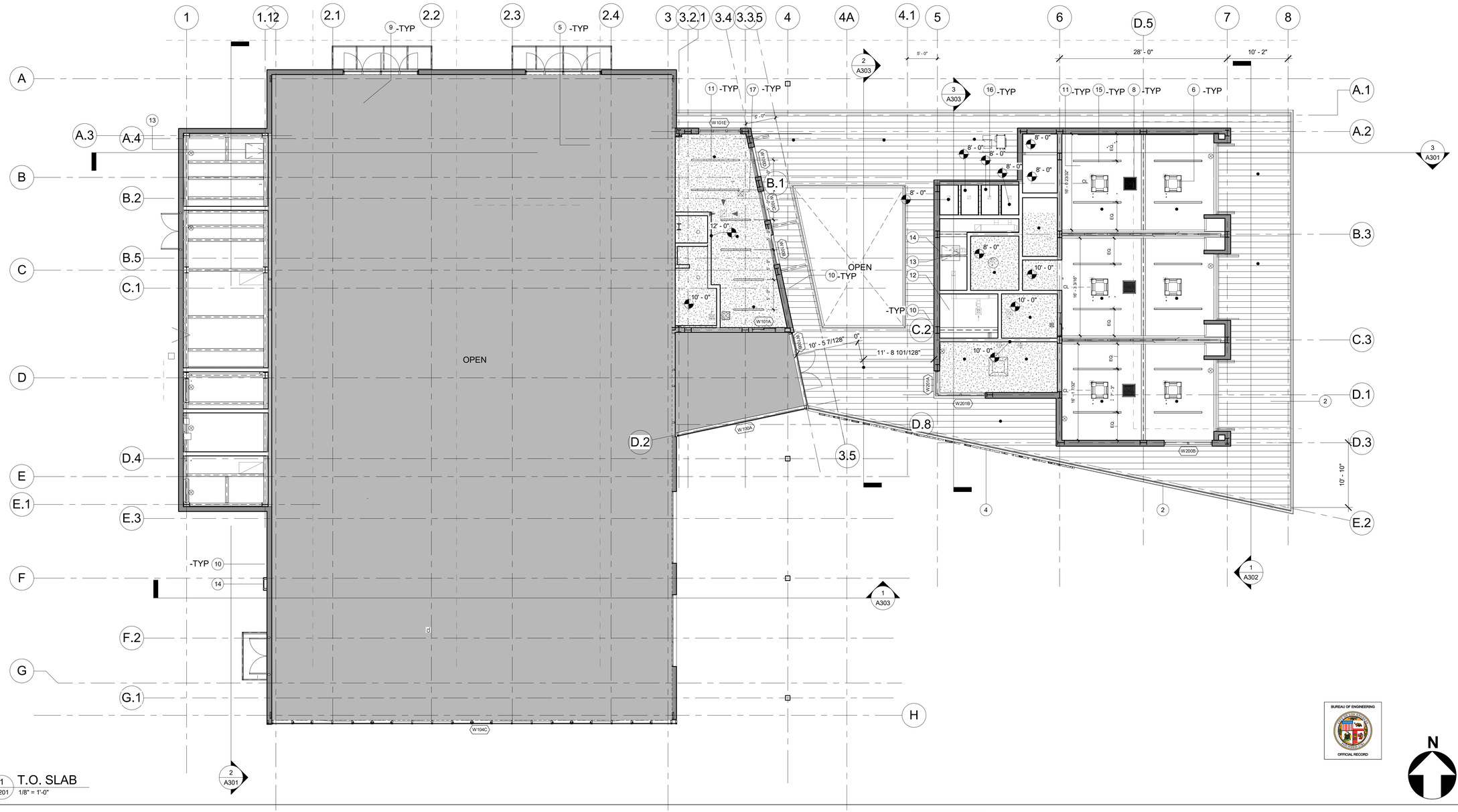
OPEN
OPEN
-TYP
-TYP
-TYP

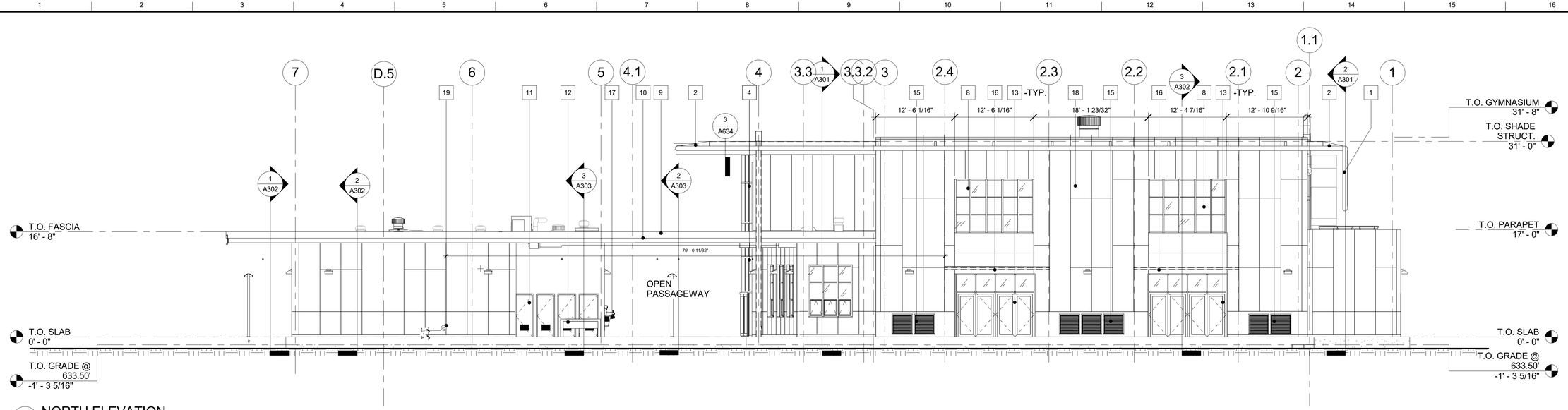

1 A101 NORTH ELEVATION
1/8" = 1'-0"

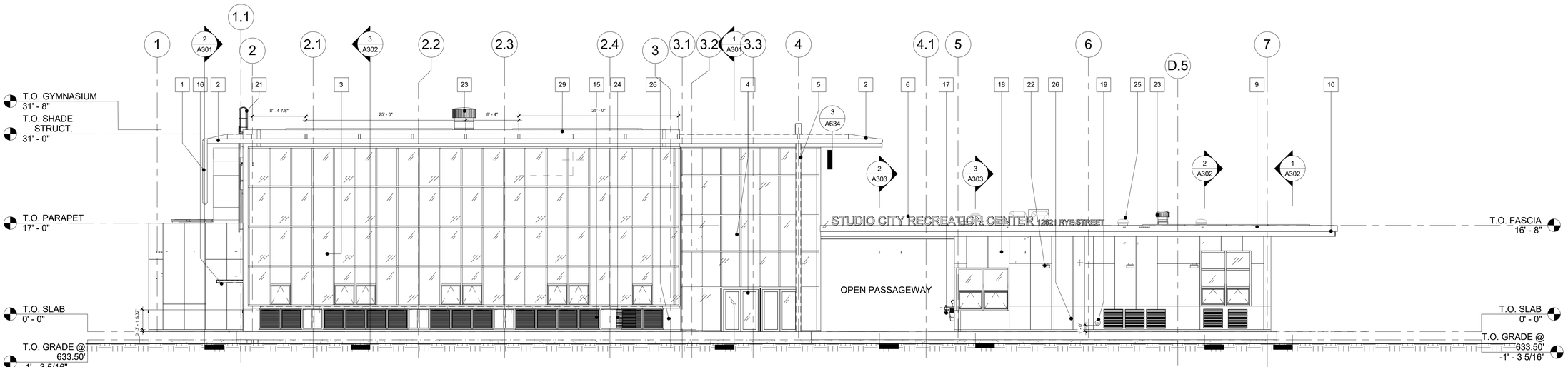

2 A101 SOUTH ELEVATION
1/8" = 1'-0"

KEYNOTES

1 VERTICAL SUN SHADE AND ADJACENT STRUCTURAL MEMBERS PER STRUCT. DWG. PROVIDE ARCHITECTURAL GRADE FINISH QUALITY. COLOR TO MATCH DUNN EDWARDS DEW381 DROPLETS. SEE A512 & STRUCTURAL DRAWINGS

2 SHADE CANOPY AND ADJACENT STRUCTURAL MEMBERS PER STRUCT. DWG. PROVIDE ARCHITECTURAL GRADE FINISH QUALITY. COLOR TO MATCH DUNN EDWARDS DEW381 DROPLETS. SEE A512 & STRUCTURAL DRAWINGS

3 THERMALLY BROKEN CURTAIN WALL SYSTEM. ALL GYM EXTERIOR GLAZING TO BE ELECTROCHROMIC GLAZING. PROVIDE SUBMITTAL. SEE A601.

4 THERMALLY BROKEN CURTAIN WALL DOUBLE DOOR W/ LOW-E, TINTED DUAL GLAZING . SEE DETAIL 3/A601.

5 STRUCTURAL COLUMN W/ ARCHITECTURAL GRADE FINISH. POWDERED COATED COLOR TO MATCH DUNN EDWARDS DEW381 DROPLETS

6 PROJECT NAME & ADDRESS SIGNAGE. COLOR TO MATC MATT BLACK. SEE A704.

7 SOLAR TUBE.

8 CLERESTORY WINDOW, COLOR TO MATCH MATT BLACK. SEE A641.

9 COMMUNITY BUILDING ROOF

10 PAINTED METAL FASCIA. COLOR TO MATCH MATT BLACK.

11 THERMALLY BROKEN HOLLOW METAL DOOR. COLOR TO MATCH DUNN EDWARDS SILVER LINED DE 6353. SEE DOOR SCHEDULE FOR ADDITIONAL INFORMATION

12 OUTDOOR LAVATORIES WITH ELECTRIC HAND DRYER.

13 THERMALLY BROKEN OVERHEAD FOLDED GLAZED DOOR. COLOR TO MATCH MATT BLACK. SEE DETAIL 10,11,12/A640

14 RETRACTABLE FOLDING DOOR. COLOR TO MATCH MATT BLACK. SEE DET. 7,8,9/A640

15 WALL MOUNTED NATURAL NVT VENTILATION SYSTEM. POWDER COATED FINISH. COLOR TO MATCH BLACK DEW 187. SEE MECHANCIAL DWG. FOR SIZING. SEE DETAIL 2/A641.

16 4' SOLID DOOR OVERHANG. COLOR TO MATCH MATT BLACK.

17 ADA WATER FOUNTAIN. SEE PLUMBING DWGS.

18 CENTRIA FORMAWALL DIMENSION SERIES. INSULATED METAL PANEL. COLOR TO MATCH LEMON SORBET DE 5408. SUBMIT PANEL LAYOUT PATTERN FOR ARCHITECTS APPROVAL. SEE A602 FOR DETAILS.

19 METAL ROOF OVERFLOW, SEE DET 2/A603. COLOR TO MATCH ADJACENT SURFACES.

20 DRINKING FOUNTAIN. SEE LANDSCAPE DRAWINGS FOR DETAIL.

21 EXTERIOR LADDER TO BE FACTORY FINISHED PAINTED.COLOR TO MATCH ADJACENT CENTRIA COLOR.

22 WALL MOUNTED LIGHT FIXTURE. ALIGN ALL EXTERIOR LIGHTING. SUBMIT COLOR/FINISH OPTIONS FOR ARCHITECTS SELECTION. SEE ELECTRICAL

23 HYBRID VENTILATOR, TYP. GYM/COMMUNITY INTERIOR PORTION COLORS TO MATCH ADJACENT SURFACES.SEE MECHANICAL.

24 DUMMY LOUVER, TYP. POWDER COATED FINISH.SEE DETAIL 2/A641.COLOR TO MATCH ADJACENT NVT SYSTEM.

25 FOUR WAY CEILING CASSETTE UNIT TYP. SUBMIT MANUEL DECORATIVE COLOR OPTIONS FOR ARCHITECTS SELECTION.

26 CENTRIA FORMAWALL DIMENSION SERIES. INSULATED METAL PANEL. COLOR TO MATCH DUNN EDWARDS BLACK DEW 187. SUBMIT PANEL LAYOUT PATTERN FOR ARCHITECTS APPROVAL. SEE A602 FOR DETAILS.

27 CENTRIA FORMAWALL DIMENSION SERIES. INSULATED METAL PANEL. COLOR TO MATCH DUNN EDWARDS GRAY WOLF DE6354. SUBMIT PANEL LAYOUT PATTERN FOR ARCHITECTS APPROVAL. SEE A602 FOR DETAILS.

28 MECHANICAL VENT AND EXHAUST. COLOR TO MATCH ADJACENT SURFACES. SEE MECHANICAL.

29 CENTRIA FORMAWALL DIMENSION SERIES. INSULATED METAL PANEL. FROM GYM TOP OF WALL TO 1ST 2' IN ALL FOUR SIDES,COLOR TO MATCH DUNN EDWARDS DEW381 DROPLET. SUBMIT PANEL LAYOUT PATTERN FOR ARCHITECTS APPROVAL. SEE A602 FOR DETAILS.

GENERAL NOTES:

1. ALIGN ALL LIGHT SWITCH PANELS.
2. ALL ROOF DRAINS CONNECT TO DRYWELL

BUREAU OF ENGINEERING
OFFICIAL RECORD

REVISION DATES: (DESIGN STAGE ONLY)

SHEET ISSUE DATE: 10/17/16

FILE PATH: A360://Studio City Recreation Center/SCRC-Project Model_Central_Final.rvt

THE CITY OF LOS ANGELES OR ITS OFFICERS OR AGENTS SHALL NOT BE RESPONSIBLE FOR THE ACCURACY OR COMPLETENESS OF ELECTRONIC COPIES OF THIS PLAN SHEET.

ENGINEERING
CITY OF LOS ANGELES

BUREAU OF ENGINEERING

NO.	REVISION DESCRIPTION	DATE	BY

BUILDING NO. -

INDEX NO. RP-300106

LICENSED ARCHITECT TONY L. VALENCIA C-23333 RENEWAL 08/31/2019 STATE OF CALIFORNIA

DEPARTMENT OF PUBLIC WORKS
CITY OF LOS ANGELES

TED ALLEN, PE

		DATE:
CITY ENGINEER		
ARCHITECTURAL DIVISION	LIC. NO.: C 23333	1-24-2019
ARCHITECT: ROBERT LOMELIN		1-24-2019
DESIGNED BY:	Z. AKHTER, M. CHAVARRIA, A. KIM, M. LAM	1-24-2019
DRAWN BY:	Z. AKHTER, M. CHAVARRIA, A. KIM	1-24-2019
CHECKED BY:	ROBERT LOMELIN	1-24-2019
APPROVED BY:	MAHMOOD KARIMZADEH,AIA, DEPUTY CITY ENGINEER	1-24-2019

CLIENT: DEPARTMENT OF RECREATION AND PARKS
GENERAL MANAGER: MICHAEL A. SHULL

SHEET TITLE: EXTERIOR ELEVATIONS

PROJECT: STUDIO CITY RECREATION CENTER

ADDRESS: 12621 RYE STREET, STUDIO CITY, CA 91604

WORK ORDER NO. E170267B

PLAN FILE NO. 860

DRAWING NO. A201

SHEET 65 OF SHEETS 211

PLOTTED:7/1/2019 11:26:24 AM

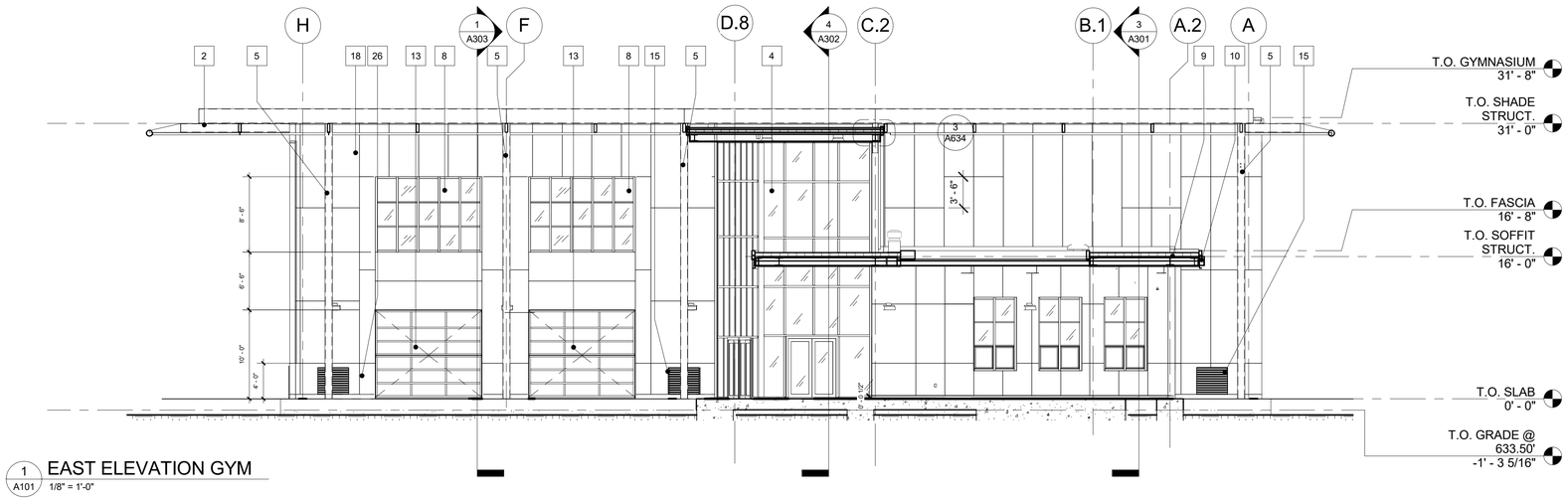

1 A101 EAST ELEVATION GYM
1/8" = 1'-0"

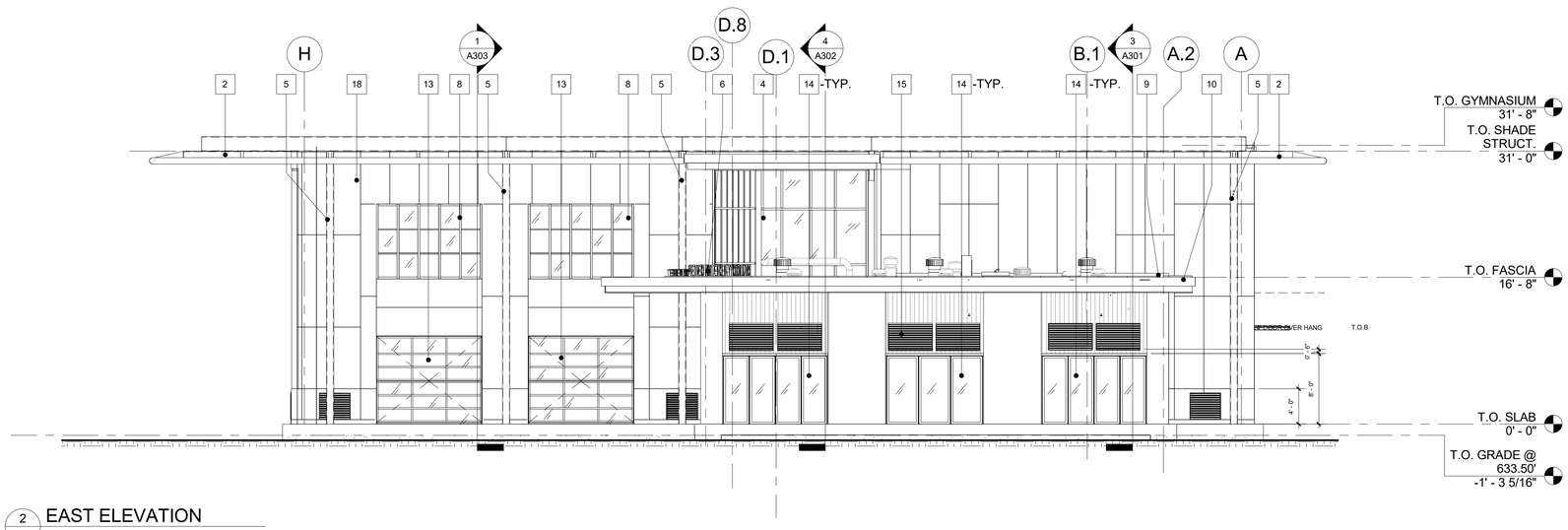

2 A101 EAST ELEVATION
1/8" = 1'-0"

KEYNOTES

1. VERTICAL SUN SHADE AND ADJACENT STRUCTURAL MEMBERS PER STRUCT. DWG. PROVIDE ARCHITECTURAL GRADE FINISH QUALITY. COLOR TO MATCH DUNN EDWARDS DEW381 DROPLETS. SEE A512 & STRUCTURAL DRAWINGS
2. SHADE CANOPY AND ADJACENT STRUCTURAL MEMBERS PER STRUCT. DWG. PROVIDE ARCHITECTURAL GRADE FINISH QUALITY. COLOR TO MATCH DUNN EDWARDS DEW381 DROPLETS. SEE A512 & STRUCTURAL DRAWINGS
3. THERMALLY BROKEN CURTAIN WALL SYSTEM. ALL GYM EXTERIOR GLAZING TO BE ELECTROCHROMIC GLAZING. PROVIDE SUBMITTAL. SEE A601.
4. THERMALLY BROKEN CURTAIN WALL DOUBLE DOOR W/ LOW-E, TINTED DUAL GLAZING . SEE DETAIL 3/A601.
5. STRUCTURAL COLUMN W/ ARCHITECTURAL GRADE FINISH. POWDERED COATED COLOR TO MATCH DUNN EDWARDS DEW381 DROPLETS
6. PROJECT NAME & ADDRESS SIGNAGE. COLOR TO MATC MATT BLACK. SEE A704.
7. SOLAR TUBE.
8. CLERESTORY WINDOW, COLOR TO MATCH MATT BLACK. SEE A641.
9. COMMUNITY BUILDING ROOF
10. PAINTED METAL FASCIA. COLOR TO MATCH MATT BLACK.
11. THERMALLY BROKEN HOLLOW METAL DOOR. COLOR TO MATCH DUNN EDWARDS SILVER LINED DE 6353. SEE DOOR SCHEDULE FOR ADDITIONAL INFORMATION
12. OUTDOOR LAVATORIES WITH ELECTRIC HAND DRYER.
13. THERMALLY BROKEN OVERHEAD FOLDED GLAZED DOOR. COLOR TO MATCH MATT BLACK. SEE DETAIL 10,11,12/A640
14. RETRACTABLE FOLDING DOOR. COLOR TO MATCH MATT BLACK. SEE DET. 7,8,9/A640
15. WALL MOUNTED NATURAL NVT VENTILATION SYSTEM. POWDER COATED FINISH. COLOR TO MATCH BLACK DEW 187. SEE MECHANCIAL DWG. FOR SIZING. SEE DETAIL 2/A641.
16. 4' SOLID DOOR OVERHANG. COLOR TO MATCH MATT BLACK.
17. ADA WATER FOUNTAIN. SEE PLUMBING DWGS.
18. CENTRIA FORMAWALL DIMENSION SERIES. INSULATED METAL PANEL. COLOR TO MATCH LEMON SORBET DE 5408. SUBMIT PANEL LAYOUT PATTERN FOR ARCHITECTS APPROVAL. SEE A602 FOR DETAILS.
19. METAL ROOF OVERFLOW, SEE DET 2/A603. COLOR TO MATCH ADJACENT SURFACES.
20. DRINKING FOUNTAIN. SEE LANDSCAPE DRAWINGS FOR DETAIL.
21. EXTERIOR LADDER TO BE FACTORY FINISHED PAINTED.COLOR TO MATCH ADJACENT CENTRIA COLOR.
22. WALL MOUNTED LIGHT FIXTURE. ALIGN ALL EXTERIOR LIGHTING. SUBMIT COLOR/FINISH OPTIONS FOR ARCHITECTS SELECTION. SEE ELECTRICAL
23. HYBRID VENTILATOR, TYP. GYM/COMMUNITY INTERIOR PORTION COLORS TO MATT BLACK. SEE DETAIL 10,11,12/A640
24. DUMMY LOUVER, TYP. POWDER COATED FINISH.SEE DETAIL 2/A641.COLOR TO MATCH ADJACENT NVT SYSTEM.
25. FOUR WAY CEILING CASSETTE UNIT TYP. SUBMIT MANUEL DECORATIVE COLOR OPTIONS FOR ARCHITECTS SELECTION.
26. CENTRIA FORMAWALL DIMENSION SERIES. INSULATED METAL PANEL. COLOR TO MATCH DUNN EDWARDS BLACK DEW 187. SUBMIT PANEL LAYOUT PATTERN FOR ARCHITECTS APPROVAL. SEE A602 FOR DETAILS.
27. CENTRIA FORMAWALL DIMENSION SERIES. INSULATED METAL PANEL. COLOR TO MATCH DUNN EDWARDS GRAY WOLF DE6354. SUBMIT PANEL LAYOUT PATTERN FOR ARCHITECTS APPROVAL. SEE A602 FOR DETAILS.
28. MECHANICAL VENT AND EXHAUST. COLOR TO MATCH ADJACENT SURFACES. SEE MECHANICAL.
29. CENTRIA FORMAWALL DIMENSION SERIES. INSULATED METAL PANEL. FROM GYM TOP OF WALL TO 1ST 2' IN ALL FOUR SIDES,COLOR TO MATCH DUNN EDWARDS DEW381 DROPLET. SUBMIT PANEL LAYOUT PATTERN FOR ARCHITECTS APPROVAL. SEE A602 FOR DETAILS.

GENERAL NOTES:

1. ALIGN ALL LIGHT SWITCH PANELS.
2. ALL ROOF DRAINS CONNECT TO DRYWELL

BUREAU OF ENGINEERING
OFFICIAL RECORD

THE CITY OF LOS ANGELES OR ITS OFFICERS OR AGENTS SHALL NOT BE RESPONSIBLE FOR THE ACCURACY OR COMPLETENESS OF ELECTRONIC COPIES OF THIS PLAN SHEET.

FILE PATH: A360://Studio City Recreation Center/SCRC-Project Model_Central_Final.rvt

SHEET ISSUE DATE: 10/17/16

REVISION DATES (DESIGN STAGE ONLY)

CITY OF LOS ANGELES
DEPARTMENT OF PUBLIC WORKS
BUREAU OF ENGINEERING

ENGINEERING
CITY OF LOS ANGELES

NO.	REVISION DESCRIPTION	DATE	BY

INDEX NO. RP-300106
BUILDING NO. -

LICENSED ARCHITECT TED ALLEN LIC. NO. C 23333 RENEWAL STATE OF CALIFORNIA

CITY ENGINEER	DATE:
TED ALLEN, PE	1-24-2019
ARCHITECTURAL DIVISION	1-24-2019
ARCHITECT: ROBERT LOMELIN LIC. NO.: C 23333	1-24-2019
DESIGNED BY: Z. AKHTER, M. CHAVARRIA, A. KIM, M. LAM	1-24-2019
DRAWN BY: Z. AKHTER, M. CHAVARRIA, A. KIM	1-24-2019
CHECKED BY: ROBERT LOMELIN	1-24-2019
APPROVED BY:MAHMOOD KARIMZADEH-AIA, DEPUTY CITY ENGINEER	1-24-2019

CLIENT: DEPARTMENT OF RECREATION AND PARKS
GENERAL MANAGER: MICHAEL A. SHULL

SHEET TITLE: EXTERIOR ELEVATIONS

PROJECT: STUDIO CITY RECREATION CENTER

ADDRESS: 12621 RYE STREET, STUDIO CITY, CA 91604

WORK ORDER NO. E170267B
PLAN FILE NO. 860
DRAWING NO. A202
SHEET 66 OF SHEETS 211

PLOTTED:7/1/2019 11:26:32 AM

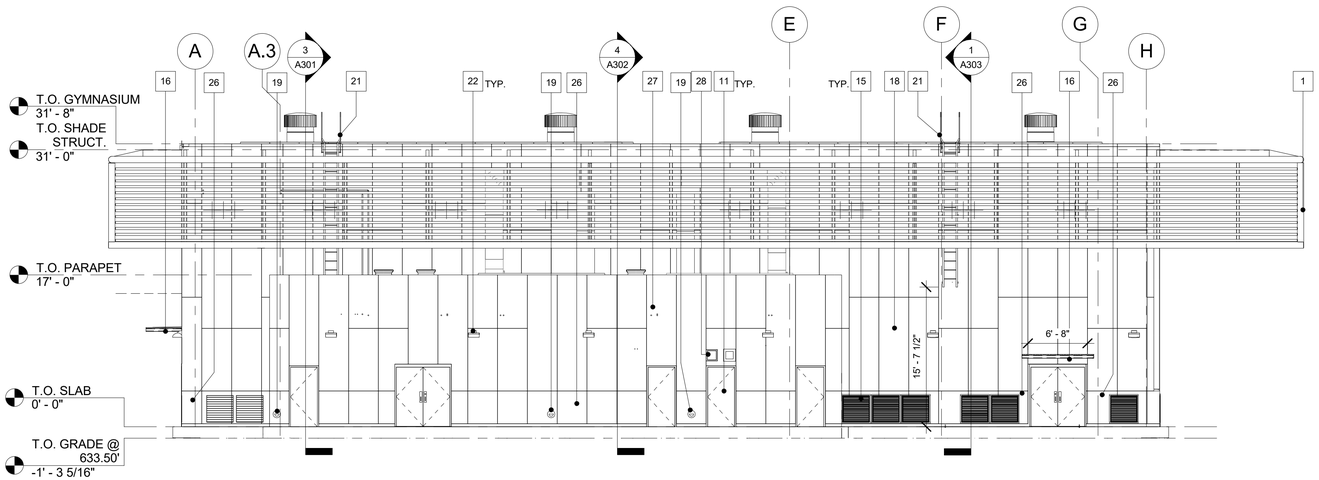

1 A101 **WEST ELEVATION**
1/8" = 1'-0"

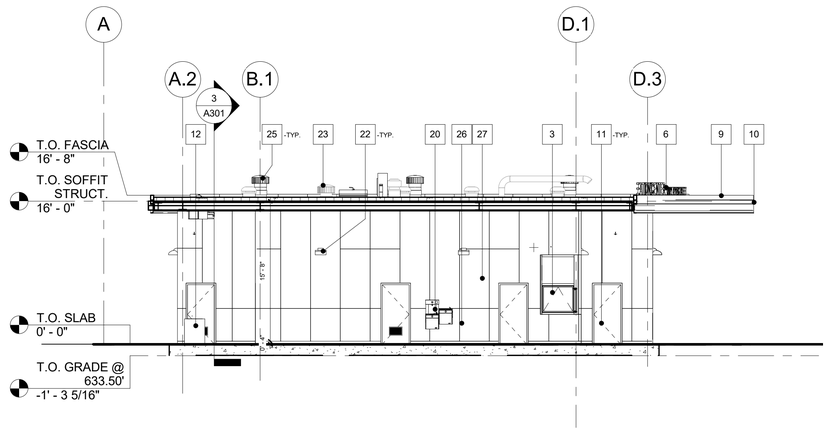

2 **WEST ELEVATION COMMUNITY ROOMS**
1/8" = 1'-0"

KEYNOTES

1 VERTICAL SUN SHADE AND ADJACENT STRUCTURAL MEMBERS PER STRUCT. DWG. PROVIDE ARCHITECTURAL GRADE FINISH QUALITY. COLOR TO MATCH DUNN EDWARDS DEW381 DROPLETS. SEE A512 & STRUCTURAL DRAWINGS

2 SHADE CANOPY AND ADJACENT STRUCTURAL MEMBERS PER STRUCT. DWG. PROVIDE ARCHITECTURAL GRADE FINISH QUALITY. COLOR TO MATCH DUNN EDWARDS DEW381 DROPLETS. SEE A512 & STRUCTURAL DRAWINGS

3 THERMALLY BROKEN CURTAIN WALL SYSTEM. ALL GYM EXTERIOR GLAZING TO BE ELECTROCHROMIC GLAZING. PROVIDE SUBMITTAL. SEE A601.

4 THERMALLY BROKEN CURTAIN WALL DOUBLE DOOR W/ LOW-E, TINTED DUAL GLAZING . SEE DETAIL 3/A601.

5 STRUCTURAL COLUMN W/ ARCHITECTURAL GRADE FINISH. POWDERED COATED COLOR TO MATCH DUNN EDWARDS DEW381 DROPLETS

6 PROJECT NAME & ADDRESS SIGNAGE. COLOR TO MATC MATT BLACK. SEE A704.

7 SOLAR TUBE.

8 CLERESTORY WINDOW, COLOR TO MATCH MATT BLACK. SEE A641.

9 COMMUNITY BUILDING ROOF

10 PAINTED METAL FASCIA. COLOR TO MATCH MATT BLACK.

11 THERMALLY BROKEN HOLLOW METAL DOOR. COLOR TO MATCH DUNN EDWARDS SILVER LINED DE 6353. SEE DOOR SCHEDULE FOR ADDITIONAL INFORMATION

12 OUTDOOR LAVATORIES WITH ELECTRIC HAND DRYER.

13 THERMALLY BROKEN OVERHEAD FOLDED GLAZED DOOR. COLOR TO MATCH MATT BLACK. SEE DETAIL 10,11,12/A640

14 RETRACTABLE FOLDING DOOR. COLOR TO MATCH MATT BLACK. SEE DET. 7,8,9/A640

15 WALL MOUNTED NATURAL NVT VENTILATION SYSTEM. POWDER COATED FINISH. COLOR TO MATCH BLACK DEW 187. SEE MECHANICAL DWG. FOR SIZING. SEE DETAIL 2/A641.

16 4' SOLID DOOR OVERHANG. COLOR TO MATCH MATT BLACK.

17 ADA WATER FOUNTAIN. SEE PLUMBING DWGS.

18 CENTRIA FORMAWALL DIMENSION SERIES. INSULATED METAL PANEL. COLOR TO MATCH LEMON SORBET DE 5408. SUBMIT PANEL LAYOUT PATTERN FOR ARCHITECTS APPROVAL. SEE A602 FOR DETAILS.

19 METAL ROOF OVERFLOW, SEE DET 2/A603. COLOR TO MATCH ADJACENT SURFACES.

20 DRINKING FOUNTAIN. SEE LANDSCAPE DRAWINGS FOR DETAIL.

21 EXTERIOR LADDER TO BE FACTORY FINISHED PAINTED.COLOR TO MATCH ADJACENT CENTRIA COLOR.

22 WALL MOUNTED LIGHT FIXTURE. ALIGN ALL EXTERIOR LIGHTING. SUBMIT COLOR/FINISH OPTIONS FOR ARCHITECTS SELECTION. SEE ELECTRICAL

23 HYBRID VENTILATOR, TYP. GYM/COMMUNITY INTERIOR PORTION COLORS TO MATCH ADJACENT SURFACES.SEE MECHANICAL.

24 DUMMY LOUVER, TYP. POWDER COATED FINISH.SEE DETAIL 2/A641.COLOR TO MATCH ADJACENT NVT SYSTEM.

25 FOUR WAY CEILING CASSETTE UNIT TYP. SUBMIT MANUEL DECORATIVE COLOR OPTIONS FOR ARCHITECTS SELECTION.

26 CENTRIA FORMAWALL DIMENSION SERIES. INSULATED METAL PANEL. COLOR TO MATCH DUNN EDWARDS BLACK DEW 187. SUBMIT PANEL LAYOUT PATTERN FOR ARCHITECTS APPROVAL. SEE A602 FOR DETAILS.

27 CENTRIA FORMAWALL DIMENSION SERIES. INSULATED METAL PANEL. COLOR TO MATCH DUNN EDWARDS GRAY WOLF DE6354. SUBMIT PANEL LAYOUT PATTERN FOR ARCHITECTS APPROVAL. SEE A602 FOR DETAILS.

28 MECHANICAL VENT AND EXHAUST. COLOR TO MATCH ADJACENT SURFACES. SEE MECHANICAL.

29 CENTRIA FORMAWALL DIMENSION SERIES. INSULATED METAL PANEL. FROM GYM TOP OF WALL TO 1ST 2' IN ALL FOUR SIDES,COLOR TO MATCH DUNN EDWARDS DEW381 DROPLET. SUBMIT PANEL LAYOUT PATTERN FOR ARCHITECTS APPROVAL. SEE A602 FOR DETAILS.

GENERAL NOTES:

1. ALIGN ALL LIGHT SWITCH PANELS.
2. ALL ROOF DRAINS CONNECT TO DRYWELL

BUREAU OF ENGINEERING
OFFICIAL RECORD

THE CITY OF LOS ANGELES OR ITS OFFICERS OR AGENTS SHALL NOT BE RESPONSIBLE FOR THE ACCURACY OR COMPLETENESS OF ELECTRONIC COPIES OF THIS PLAN SHEET.

FILE PATH: A360://Studio City Recreation Center/SCRC-Project Model_Central_Final.rvt

SHEET ISSUE DATE: 10/20/16

REVISION DATES (DESIGN STAGE ONLY)

DEPARTMENT OF PUBLIC WORKS
BUREAU OF ENGINEERING
ENGINEERING
CITY OF LOS ANGELES

NO.	REVISION DESCRIPTION	DATE	BY

BUILDING NO. 1

INDEX NO. **RP-300106**

LICENSED ARCHITECT TED ALLEN LIC. NO. C 23333 RENEWAL 08/31/2021 STATE OF CALIFORNIA

CITY OF LOS ANGELES

CITY ENGINEER		
DATE:		
ARCHITECTURAL DIVISION		1-24-2019
ARCHITECT: ROBERT LOMELIN	LIC. NO.: C 23333	1-24-2019
DESIGNED BY: Z. AKHTER, M. CHAVARRIA, A. KIM, M. LAM		1-24-2019
DRAWN BY: Z. AKHTER, M. CHAVARRIA, A. KIM		1-24-2019
CHECKED BY: ROBERT LOMELIN		1-24-2019
APPROVED BY:MAHMOOD KARIMZADEH,AIA, DEPUTY CITY ENGINEER		1-24-2019

TED ALLEN, PE
ARCHITECTURAL DIVISION

CLIENT: DEPARTMENT OF RECREATION AND PARKS
GENERAL MANAGER: MICHAEL A. SHULL

SHEET TITLE: EXTERIOR ELEVATIONS

PROJECT: STUDIO CITY RECREATION CENTER

ADDRESS: 12621 RYE STREET, STUDIO CITY, CA 91604

WORK ORDER NO. E170267B

PLAN FILE NO. 860

DRAWING NO. **A203**

SHEET 67 OF SHEETS 211

PLOTTED:7/1/2019 11:26:41 AM

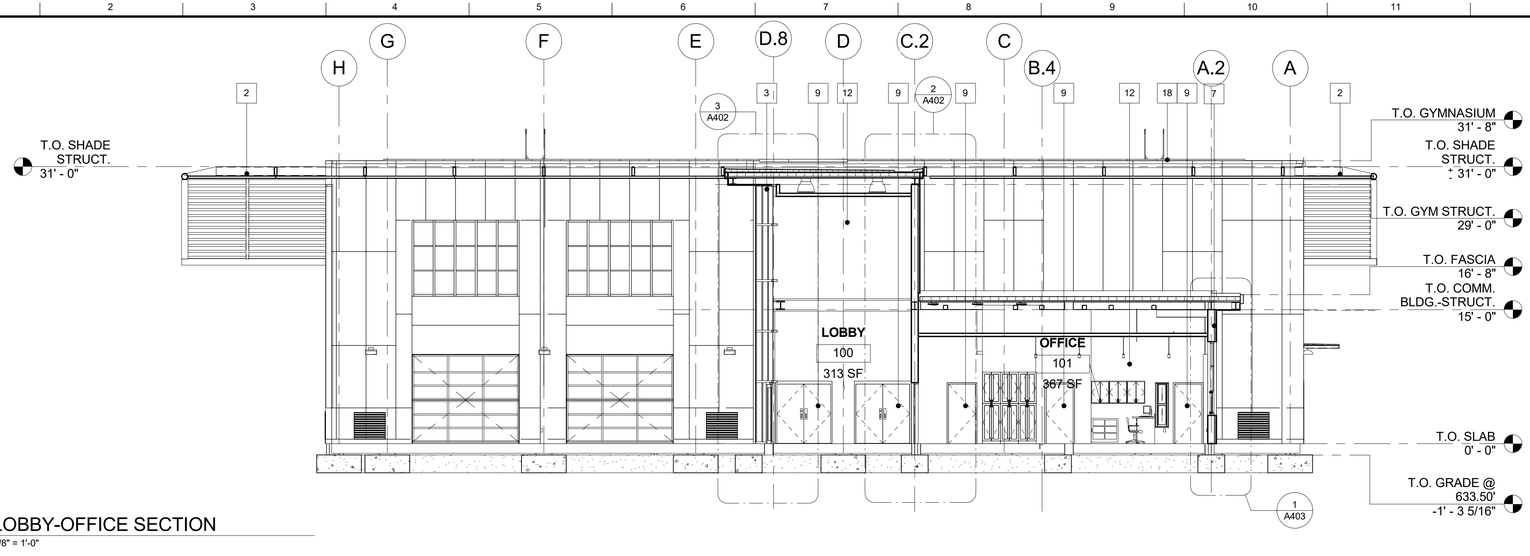

1 A101 LOBBY-OFFICE SECTION
1/8" = 1'-0"

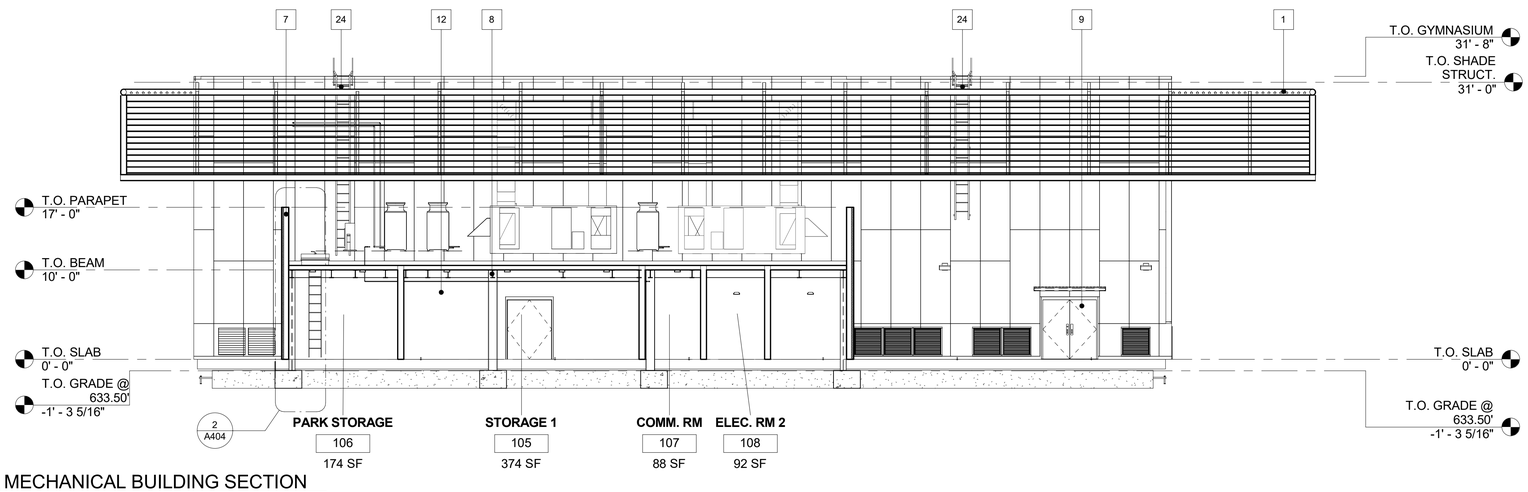

2 A101 MECHANICAL BUILDING SECTION
1/8" = 1'-0"

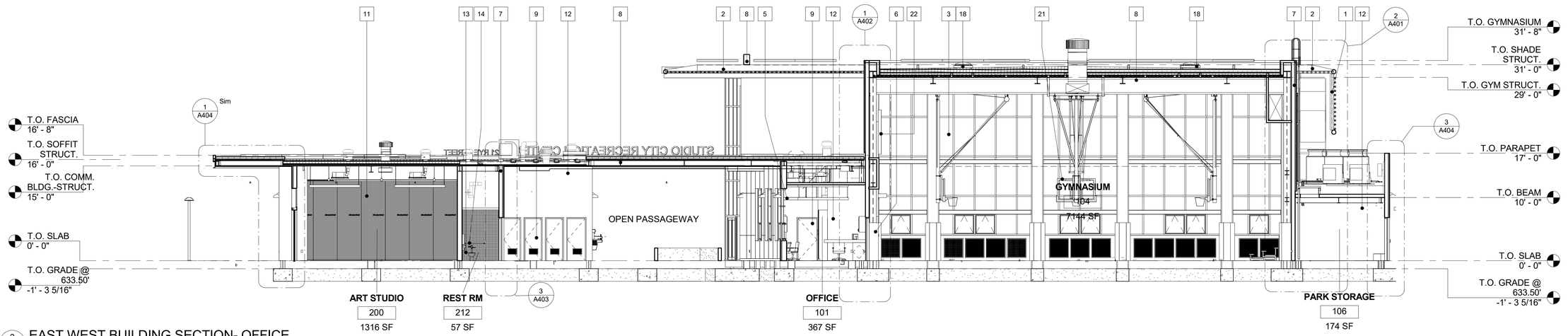

3 A101 EAST WEST BUILDING SECTION- OFFICE
1/8" = 1'-0"

KEYNOTES

1 VERTICAL SUN SHADE
2 SHADE CANOPY
3 CURTAIN WALL SYSTEM
5 CLERESTORY
6 STRUCTURAL COLUMN. PROVIDE 6" PADDING. SUBMIT PADDING FINISH AND COLOR OPTION
7 METAL STUD WALL, TYP.
8 STEEL BEAM PER STRUCTURAL
9 H.M. DOOR PAINTED SEE DOOR SCHEDULE FOR ADDITIONAL INFORMATION
10 NANAWALL "SL60" DOOR SYSTEM
11 ROOM DIVIDER
12 GYP BD, PAINTED, SEE FINISH SCHEDULE
13 WALL MOUNTED WATER CLOSET
14 GRAB BAR.SEE A503.
15 NOT USED
16 CURTAIN WALL DOUBLE DOOR
17 EXT. METAL STUD WALL W/ CENTRIA. TYP
18 SOLATUBE 29" DIAMETER M74DS SERIES. SEE DETAIL 2/A633
19 CEILING LIGHT, SEE ELECTRICAL
20 PENDANT LIGHT, SEE ELECTRICAL
21 BASKETBALL BACKSTOP, SEE STRUCTURAL FOR ATTACHMENT DETAIL
22 NVT OPERABLE NATURAL VENTILATION SYSTEM W/ INSULATION, COLOR TO MATCH ADJACENT SURFACES. SEE DET 1/A641
23 BASKETBALL SCORE BOARD, SEE STRUCTURAL FOR ATTACHMENT DETAIL
24 EXTERIOR LADDER
25 STRUCTURAL SHADE CANOPY COLUMN. PER STRUCTURAL DWGS.
26 STRUCTURAL SHADE CANOPY BEAM. PER STRUCTURAL DWGS.
27 EXPOSED "TORIS 4A" ROOF DECK/CEILING SYSTEM
28 SINGLE PLY ROOFING OVER DENSE BOARD
29 STRUCTURAL MEMBER PER STRUCTURAL DWGS.
30 LADDER ACCESS ROOF HATCH
31 ADA WATER FOUNTAIN. SEE PLUMBING DWGS.
32 OUTDOOR LAVATORY. SEE PLUMBING DWGS.
33 ADA WATER FOUNTAIN. SEE PLUMBING DWGS.
34 METAL WALL FURRING W/ GYPSUM FINISH. SEE SIM. DET. 2/A621

GENERAL NOTES:
1. ALL ROOF DRAINS CONNECT TO DRYWELL

BUREAU OF ENGINEERING OFFICIAL RECORD

THE CITY OF LOS ANGELES OR ITS OFFICERS OR AGENTS SHALL NOT BE RESPONSIBLE FOR THE ACCURACY OR COMPLETENESS OF ELECTRONIC COPIES OF THIS PLAN SHEET.

FILE PATH: A360://Studio City Recreation Center/SCRC-Project Model_Central_Final.rvt

SHEET ISSUE DATE: 04/19/17

REVISION DATES (DESIGN STAGE ONLY)

DEPARTMENT OF PUBLIC WORKS
BUREAU OF ENGINEERING
CITY OF LOS ANGELES
ENGINEERING

NO.	REVISION DESCRIPTION	DATE	BY

BUILDING NO. -
INDEX NO. RP-300106

LICENSED ARCHITECT TIMOTHY L. MAAS No. 30333 REGISTERED STATE OF CALIFORNIA

CITY ENGINEER DATE: 1-24-2019

TED ALLEN, PE
ARCHITECTURAL DIVISION
LIC. NO.: C 23333

ARCHITECT: ROBERT LOMELIN
DESIGNED BY: Z. AKHTER, M. CHAVARRIA, A. KIM, M. LAM
DRAWN BY: Z. AKHTER, M. CHAVARRIA, A. KIM
CHECKED BY: ROBERT LOMELIN
APPROVED BY: MAHMOOD KARIMZADEH, AIA, DEPUTY CITY ENGINEER 1-24-2019

CITY OF LOS ANGELES
CLIENT: DEPARTMENT OF RECREATION AND PARKS
GENERAL MANAGER: MICHAEL A. SHULL

SHEET TITLE: BUILDING SECTIONS

PROJECT: STUDIO CITY RECREATION CENTER
ADDRESS: 12621 RYE STREET, STUDIO CITY, CA 91604

WORK ORDER NO. E170267B
PLAN FILE NO. 860
DRAWING NO. A301
SHEET 68 OF SHEETS 211

PLOTTED:7/1/2019 11:27:22 AM

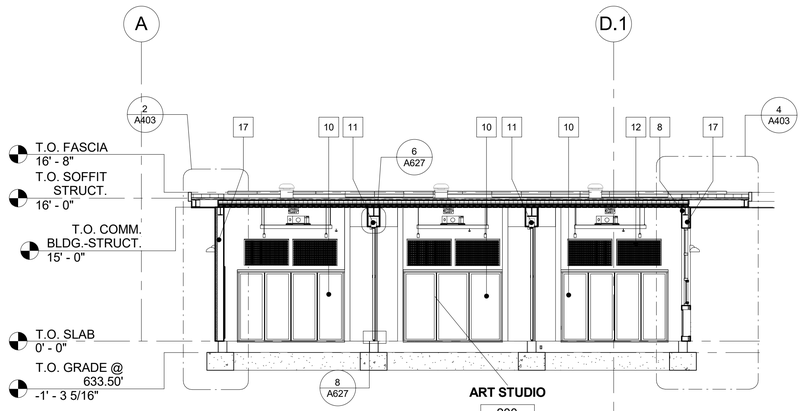

2 A101 COMMUNITY ROOM LONGITUDINAL SECTION
1/8" = 1'-0"

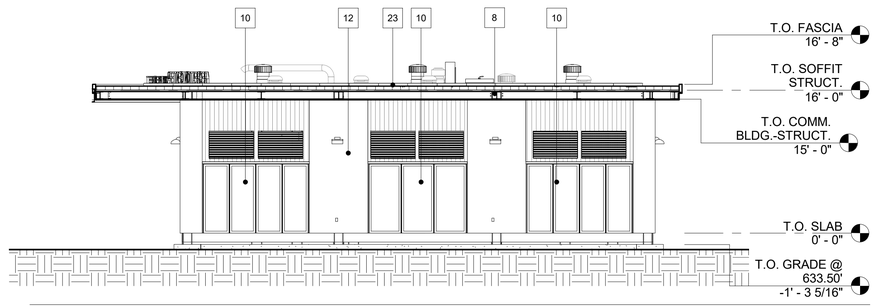

1 A101 COMMUNITY ROOM EAST ROOF SECTION
1/8" = 1'-0"

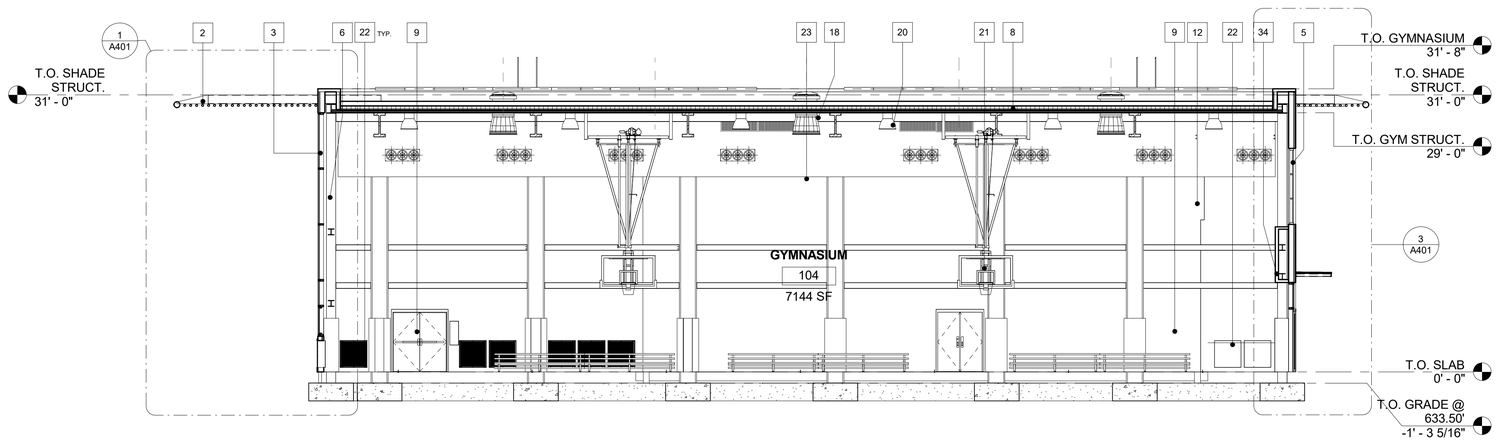

3 A101 GYMNASIUM LONGITUDINAL SECTION
1/8" = 1'-0"

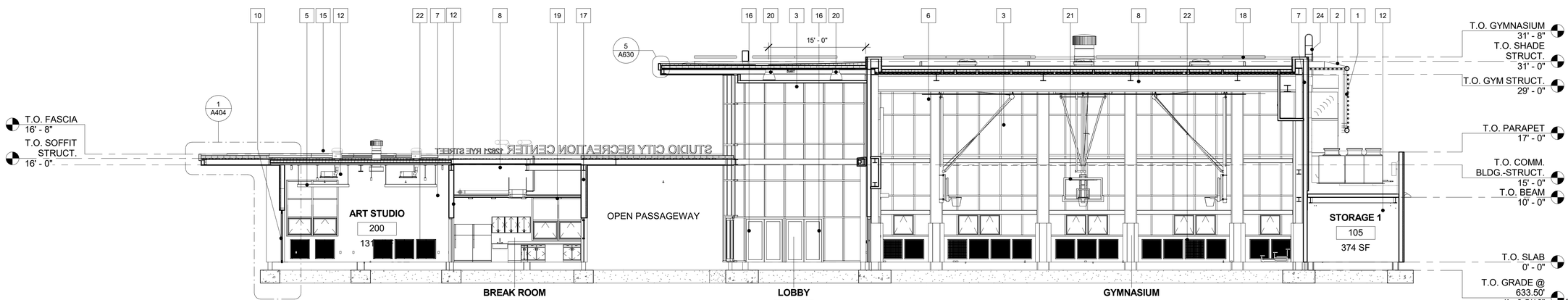

4 A101 EAST WEST BUIDLING SECTION -LOBBY
1/8" = 1'-0"

KEYNOTES

1 VERTICAL SUN SHADE
2 SHADE CANOPY
3 CURTAIN WALL SYSTEM
5 CLERESTORY
6 STRUCTURAL COLUMN, PROVIDE 6' PADDING. SUBMIT PADDING FINISH AND COLOR OPTION
7 METAL STUD WALL, TYP.
8 STEEL BEAM PER STRUCTURAL
9 H.M. DOOR PAINTED SEE DOOR SCHEDULE FOR ADDITIONAL INFORMATION
10 NANAWALL "SL60" DOOR SYSTEM
11 ROOM DIVIDER
12 GYP BD, PAINTED, SEE FINISH SCHEDULE
13 WALL MOUNTED WATER CLOSET
14 GRAB BAR.SEE A503.
15 NOT USED
16 CURTAIN WALL DOUBLE DOOR
17 EXT. METAL STUD WALL W/ CENTRIA. TYP
18 SOLATUBE 29" DIAMETER M74DS SERIES. SEE DETAIL 2/A633
19 CEILING LIGHT, SEE ELECTRICAL
20 PENDANT LIGHT, SEE ELECTRICAL
21 BASKETBALL BACKSTOP, SEE STRUCTURAL FOR ATTACHMENT DETAIL
22 NVT OPERABLE NATURAL VENTILATION SYSTEM W/ INSULATION, COLOR TO MATCH ADJACENT SURFACES. SEE DET 1/A641
23 BASKETBALL SCORE BOARD, SEE STRUCTURAL FOR ATTACHMENT DETAIL
24 EXTERIOR LADDER
25 STRUCTURAL SHADE CANOPY COLUMN. PER STRUCTURAL DWGS.
26 STRUCTURAL SHADE CANOPY BEAM. PER STRUCTURAL DWGS.
27 EXPOSED "TORIS 4A" ROOF DECK/CEILING SYSTEM
28 SINGLE PLY ROOFING OVER DENSE BOARD
29 STRUCTURAL MEMBER PER STRUCTURAL DWGS.
30 LADDER ACCESS ROOF HATCH
31 ADA WATER FOUNTAIN. SEE PLUMBING DWGS.
32 OUTDOOR LAVATORY. SEE PLUMBING DWGS.
33 ADA WATER FOUNTAIN. SEE PLUMBING DWGS.
34 METAL WALL FURRING W/ GYPSUM FINISH. SEE SIM. DET. 2/A621

GENERAL NOTES:
1. ALL ROOF DRAINS CONNECT TO DRYWELL

THE CITY OF LOS ANGELES OR ITS OFFICERS OR AGENTS SHALL NOT BE RESPONSIBLE FOR THE ACCURACY OR COMPLETENESS OF ELECTRONIC COPIES OF THIS PLAN SHEET.

FILE PATH: A360://Studio City Recreation Center/SCRC-Project Model_Central_Final.rvt

SHEET ISSUE DATE: 04/19/17

REVISION DATES (DESIGN STAGE ONLY)

ENGINEERING
CITY OF LOS ANGELES

BUREAU OF ENGINEERING

NO.	REVISION DESCRIPTION	DATE	BY

BUILDING NO. -
INDEX NO. RP-300106

LICENSED ARCHITECT TONELLI JOSEPH MAS No. C-23333 REGISTERED STATE OF CALIFORNIA

DEPARTMENT OF PUBLIC WORKS
CITY OF LOS ANGELES

CITY ENGINEER	DATE:
TED ALLEN, PE	
ARCHITECTURAL DIVISION	LIC. NO.: C 23333
ARCHITECT: ROBERT LOMELIN	1-24-2019
DESIGNED BY: Z. AKHTER, M. CHAVARRIA, A. KIM, M. LAM	1-24-2019
DRAWN BY: Z. AKHTER, M. CHAVARRIA, A. KIM	1-24-2019
CHECKED BY: ROBERT LOMELIN	1-24-2019
APPROVED BY:MAHMOOD KARIMZADEH,AIA, DEPUTY CITY ENGINEER	1-24-2019

CLIENT: DEPARTMENT OF RECREATION AND PARKS
GENERAL MANAGER: MICHAEL A. SHULL

SHEET TITLE: BUILDING SECTIONS

PROJECT: STUDIO CITY RECREATION CENTER

ADDRESS: 12621 RYE STREET, STUDIO CITY, CA 91604

WORK ORDER NO. E170267B
PLAN FILE NO. 860
DRAWING NO. A302
SHEET 69 OF SHEETS 211

BUREAU OF ENGINEERING OFFICIAL RECORD

PLOTTED:7/1/2019 11:28:05 AM

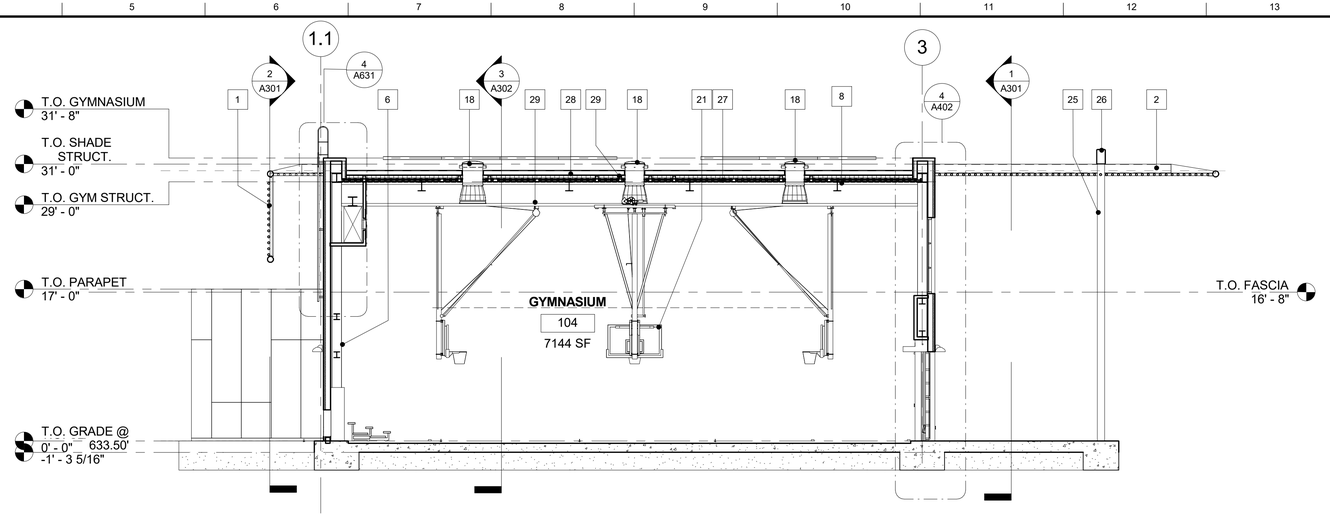

1 A101 GYM CROSS SECTION- OVERHEAD DOOR
1/8" = 1'-0"

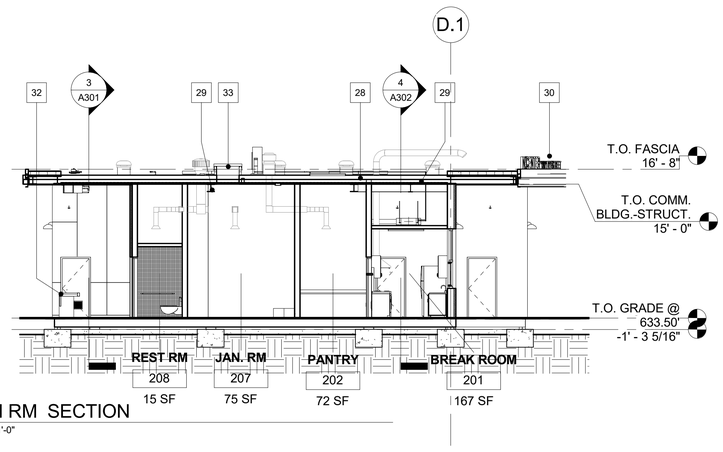

3 A101 JAN RM SECTION
1/8" = 1'-0"

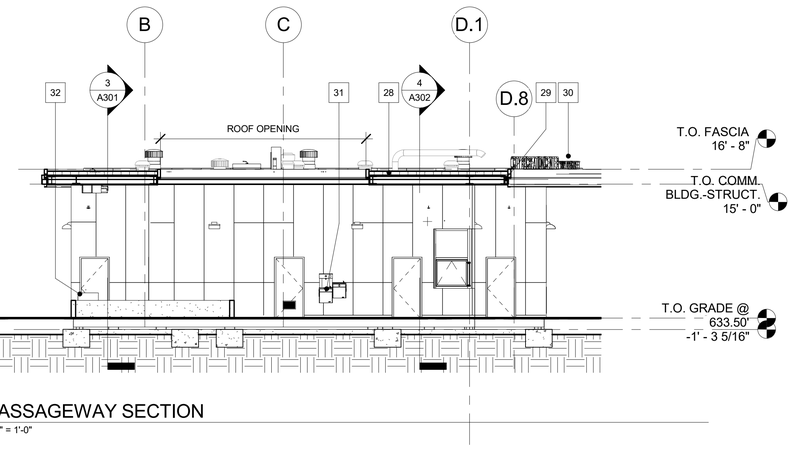

2 A101 PASSAGEWAY SECTION
1/8" = 1'-0"

KEYNOTES

1 VERTICAL SUN SHADE
2 SHADE CANOPY
3 CURTAIN WALL SYSTEM
5 CLERESTORY
6 STRUCTURAL COLUMN, PROVIDE 6" PADDING. SUBMIT PADDING FINISH AND COLOR OPTION
7 METAL STUD WALL, TYP.
8 STEEL BEAM PER STRUCTURAL
9 H.M. DOOR PAINTED SEE DOOR SCHEDULE FOR ADDITIONAL INFORMATION
10 NANAWALL "SL60" DOOR SYSTEM
11 ROOM DIVIDER
12 GYP BD, PAINTED, SEE FINISH SCHEDULE
13 WALL MOUNTED WATER CLOSET
14 GRAB BAR.SEE A503.
15 NOT USED
16 CURTAIN WALL DOUBLE DOOR
17 EXT. METAL STUD WALL W/ CENTRIA. TYP
18 SOLATUBE 29" DIAMETER M74DS SERIES. SEE DETAIL 2/A633
19 CEILING LIGHT, SEE ELECTRICAL
20 PENDANT LIGHT, SEE ELECTRICAL
21 BASKETBALL BACKSTOP, SEE STRUCTURAL FOR ATTACHMENT DETAIL
22 NVT OPERABLE NATURAL VENTILATION SYSTEM W/ INSULATION, COLOR TO MATCH ADJACENT SURFACES. SEE DET 1/A641
23 BASKETBALL SCORE BOARD, SEE STRUCTURAL FOR ATTACHMENT DETAIL
24 EXTERIOR LADDER
25 STRUCTURAL SHADE CANOPY COLUMN. PER STRUCTURAL DWGS.
26 STRUCTURAL SHADE CANOPY BEAM. PER STRUCTURAL DWGS.
27 EXPOSED "TORIS 4A" ROOF DECK/CEILING SYSTEM
28 SINGLE PLY ROOFING OVER DENSE BOARD
29 STRUCTURAL MEMBER PER STRUCTURAL DWGS.
30 LADDER ACCESS ROOF HATCH
31 ADA WATER FOUNTAIN. SEE PLUMBING DWGS.
32 OUTDOOR LAVATORY. SEE PLUMBING DWGS.
33 ADA WATER FOUNTAIN. SEE PLUMBING DWGS.
34 METAL WALL FURRING W/ GYPSUM FINISH. SEE SIM. DET. 2/A621

THE CITY OF LOS ANGELES OR ITS OFFICERS OR AGENTS SHALL NOT BE RESPONSIBLE FOR THE ACCURACY OR COMPLETENESS OF ELECTRONIC COPIES OF THIS PLAN SHEET.

FILE PATH: A360://Studio City Recreation Center/SCRC-Project Model_Central_Final.rvt

SHEET ISSUE DATE: 04/02/18

REVISION DATES (DESIGN STAGE ONLY)

BUREAU OF ENGINEERING
OFFICIAL RECORD

CITY OF LOS ANGELES
DEPARTMENT OF PUBLIC WORKS
BUREAU OF ENGINEERING

ENGINEERING
CITY OF LOS ANGELES

NO.	REVISION DESCRIPTION	DATE	BY

BUILDING NO. -

INDEX NO. RP-300106

LICENSED ARCHITECT TONI M. LAM No. 23333 REGISTERED STATE OF CALIFORNIA

CITY ENGINEER

	DATE:
TED ALLEN, PE	1-24-2019
ARCHITECTURAL DIVISION	1-24-2019
ARCHITECT: ROBERT LOMELIN LIC. NO.: C 23333	1-24-2019
DESIGNED BY: Z. AKHTER, M. CHAVARRIA, A. KIM, M. LAM	1-24-2019
DRAWN BY: Z. AKHTER, M. CHAVARRIA, A. KIM	1-24-2019
CHECKED BY: ROBERT LOMELIN	1-24-2019
APPROVED BY:MAHMOOD KARIMZADEH-AIA, DEPUTY CITY ENGINEER	1-24-2019

CITY OF LOS ANGELES
CLIENT: DEPARTMENT OF RECREATION AND PARKS
GENERAL MANAGER: MICHAEL A. SHULL

SHEET TITLE: BUILDNG SECTIONS

PROJECT: STUDIO CITY RECREATION CENTER

ADDRESS: 12621 RYE STREET, STUDIO CITY, CA 91604

WORK ORDER NO. E170267B

PLAN FILE NO. 860

DRAWING NO. A303

SHEET 70 OF SHEETS 211

PLOTTED:7/1/2019 11:28:17 AM

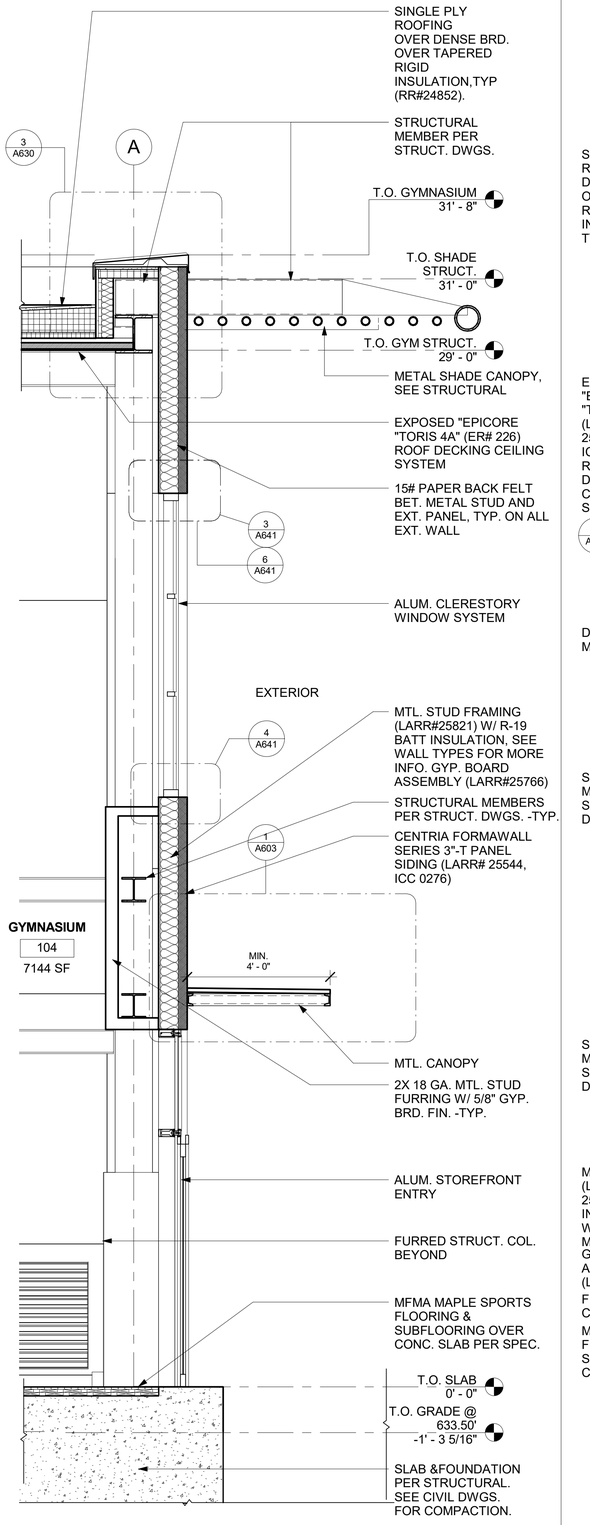

3 A302 GYM WALL SECTION-NORTH CANOPY
1/2" = 1'-0"

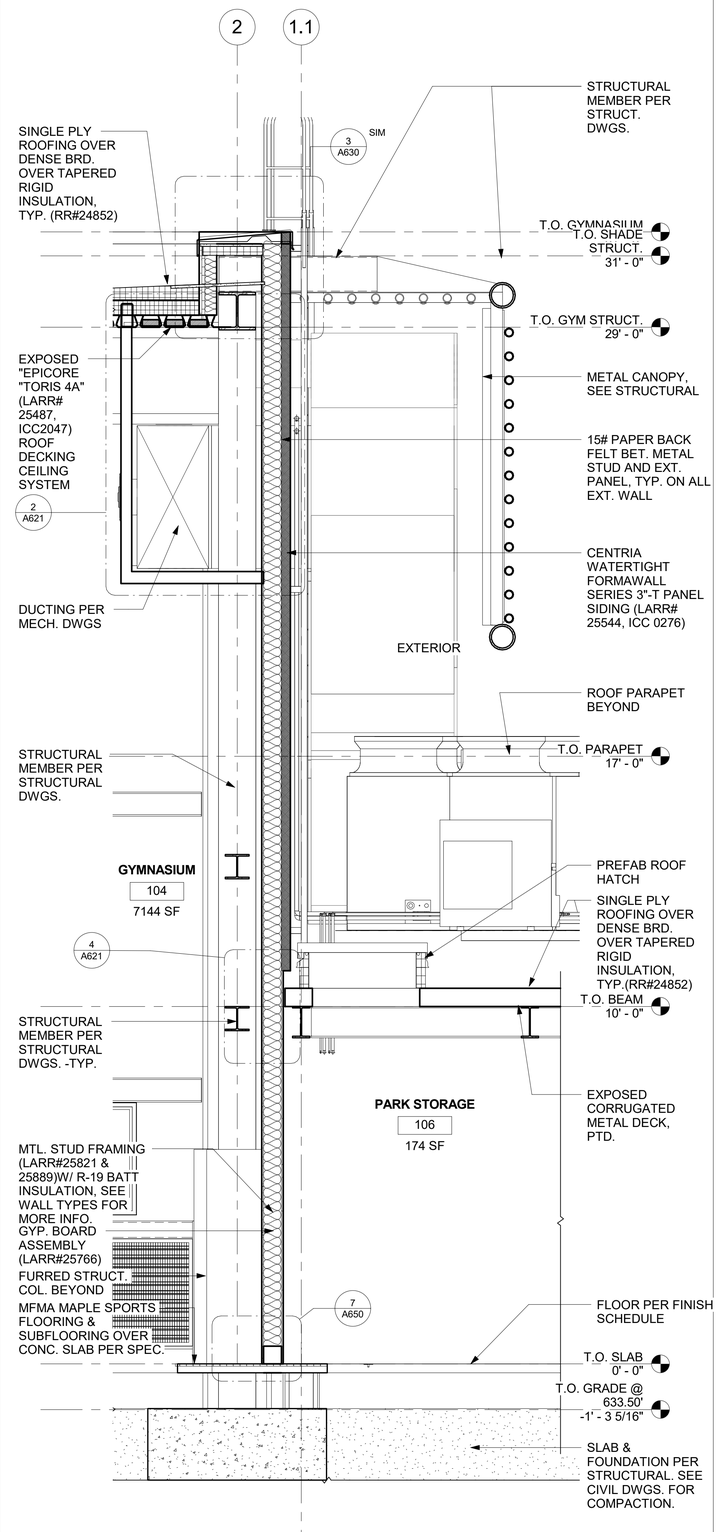

2 A301 GYM WALL SECTION-PARK STORAGE
1/2" = 1'-0"

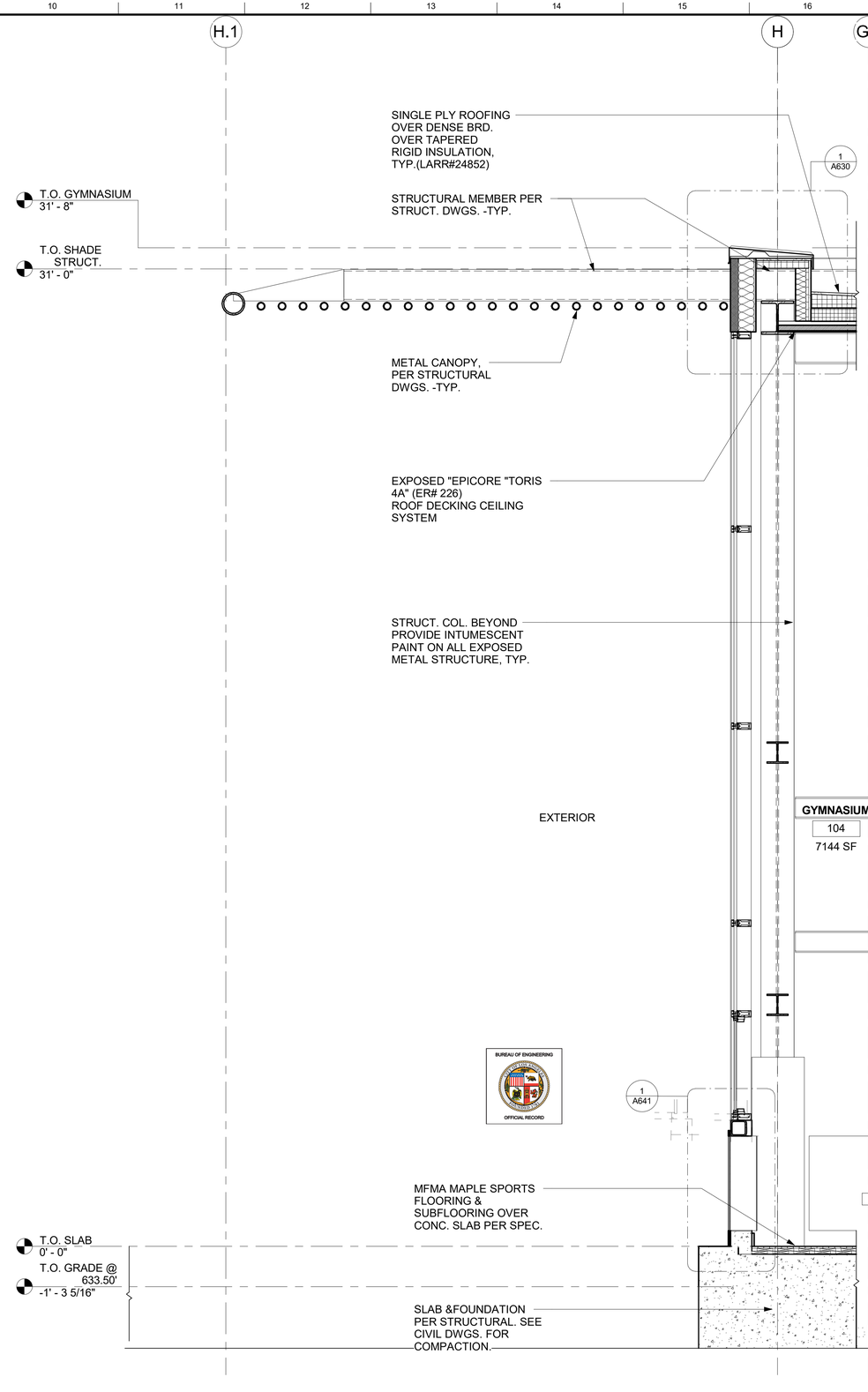

1 A302 GYM WALL SECTION-SOUTH CANOPY
1/2" = 1'-0"

THE CITY OF LOS ANGELES OR ITS OFFICERS OR AGENTS SHALL NOT BE RESPONSIBLE FOR THE ACCURACY OR COMPLETENESS OF ELECTRONIC COPIES OF THIS PLAN SHEET.

FILE PATH: A360://Studio City Recreation Center/SCRC-Project Model_Central_Final.rvt

SHEET ISSUE DATE: 05/23/17

REVISION DATES (DESIGN STAGE ONLY)

ENGINEERING
CITY OF LOS ANGELES

BUREAU OF ENGINEERING

NO.	REVISION DESCRIPTION	DATE	BY

BUILDING NO. -

INDEX NO. RP-300106

LICENSED ARCHITECT TONELLI No. 23333 REGISTERED STATE OF CALIFORNIA

CITY ENGINEER	DATE:
ARCHITECTURAL DIVISION	1-24-2019
ARCHITECT: ROBERT LOMELIN LIC. NO.: C 23333	1-24-2019
DESIGNED BY: Z. AKHTER, M. CHAVARRIA, A. KIM, M. LAM	1-24-2019
DRAWN BY: Z. AKHTER, M. CHAVARRIA, A KIM	1-24-2019
CHECKED BY: ROBERT LOMELIN	1-24-2019
APPROVED BY:MAHMOOD KARIMZADEH,AIA, DEPUTY CITY ENGINEER	1-24-2019

TED ALLEN, PE

DEPARTMENT OF PUBLIC WORKS
CITY OF LOS ANGELES

CLIENT: DEPARTMENT OF RECREATION AND PARKS
GENERAL MANAGER: MICHAEL A. SHULL

SHEET TITLE: WALL SECTIONS

PROJECT: STUDIO CITY RECREATION CENTER

ADDRESS: 12621 RYE STREET, STUDIO CITY, CA 91604

WORK ORDER NO. E170267B

PLAN FILE NO. 860

DRAWING NO. A401

SHEET 71 OF SHEETS 211

PLOTTED:7/1/2019 11:26:27 AM

THE CITY OF LOS ANGELES OR ITS OFFICERS OR AGENTS SHALL NOT BE RESPONSIBLE FOR THE ACCURACY OR COMPLETENESS OF ELECTRONIC COPIES OF THIS PLAN SHEET.

FILE PATH: A360://Studio City Recreation Center/SCRC-Project Model_Central_Final.rvt

SHEET ISSUE DATE: 05/24/17

REVISION DATES (DESIGN STAGE ONLY)

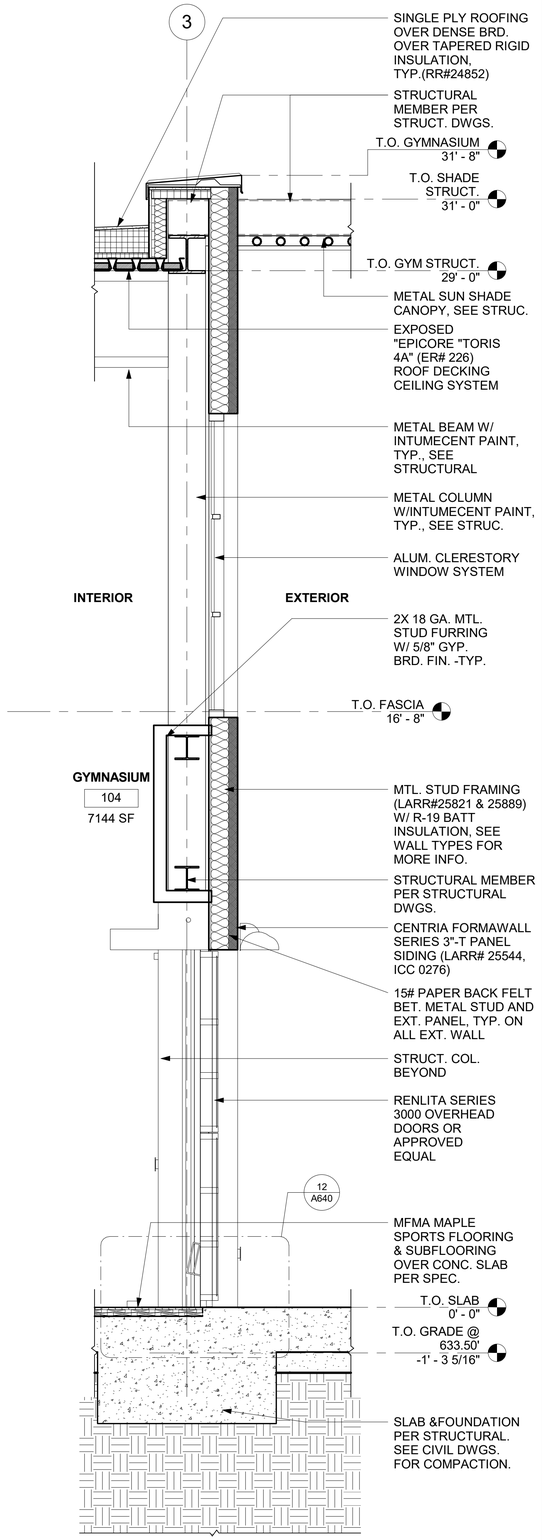

4 A303 GYM WALL SECTION-OVERHEAD DOOR
1/2" = 1'-0"

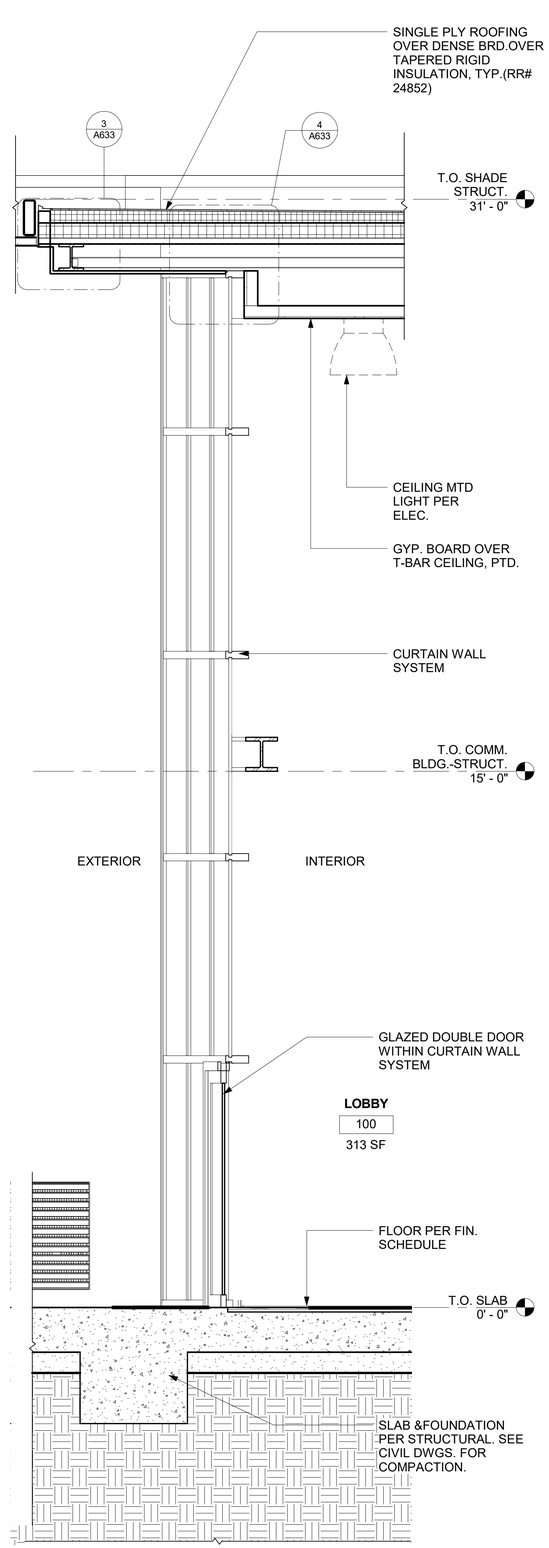

3 A301 LOBBY WALL SECTION- CURTAIN WALL
1/2" = 1'-0"

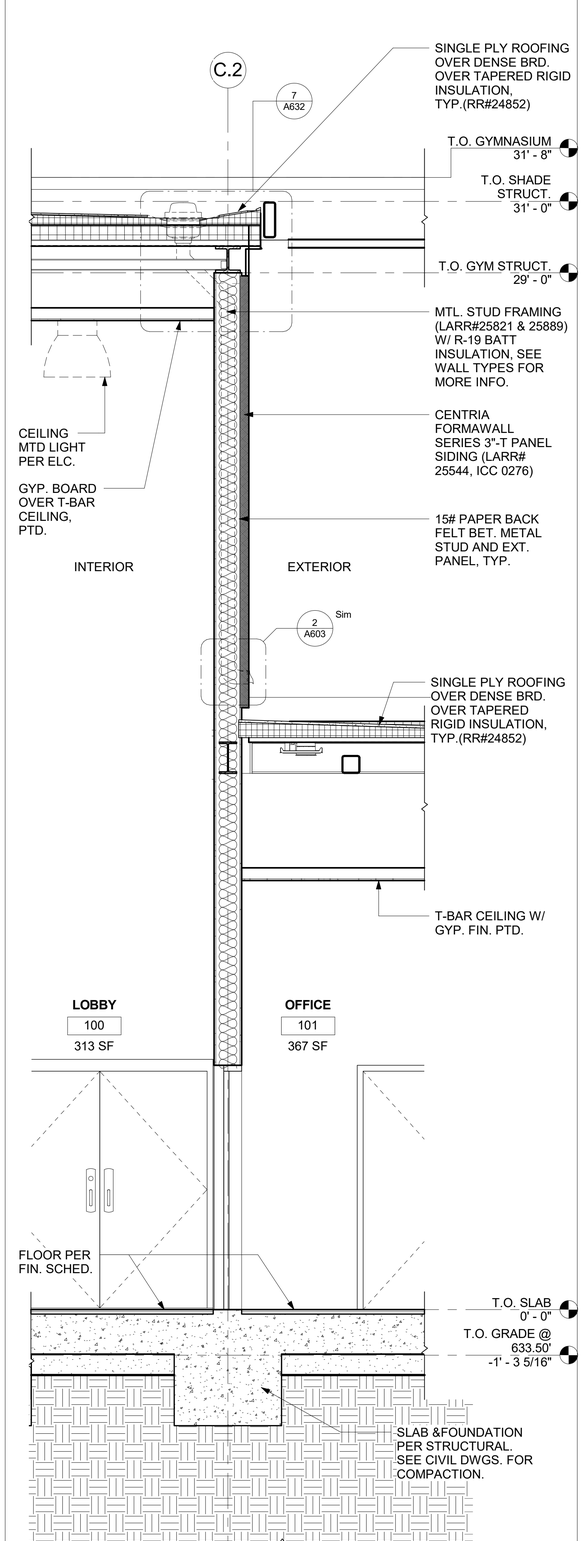

2 A301 LOBBY WALL SECTION-OFFICE 101
1/2" = 1'-0"

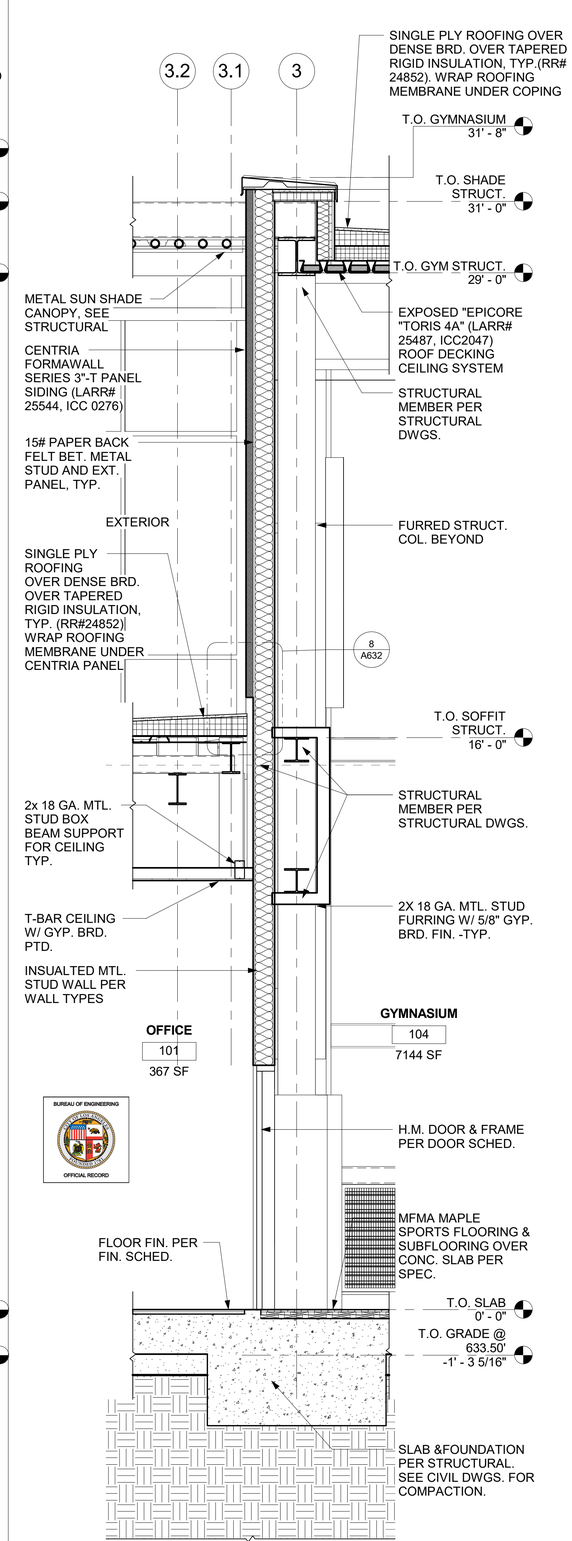

1 A301 GYM WALL SECTION- OFFICE 101
1/2" = 1'-0"

BUREAU OF ENGINEERING
OFFICIAL RECORD

ENGINEERING
CITY OF LOS ANGELES

BUREAU OF ENGINEERING
DEPARTMENT OF PUBLIC WORKS
CITY OF LOS ANGELES

NO.	REVISION DESCRIPTION	DATE	BY

BUILDING NO. -

INDEX NO. RP-300106

LICENSED ARCHITECT TED ALLEN LOMELIN C. NO. C 23333 REGISTERED STATE OF CALIFORNIA

CITY ENGINEER	DATE:	1-24-2019
ARCHITECTURAL DIVISION	LIC. NO.: C 23333	1-24-2019
ARCHITECT: ROBERT LOMELIN		1-24-2019
DESIGNED BY: Z. AKHTER, M. CHAVARRIA, A. KIM, M. LAM		
DRAWN BY: Z. AKHTER, M. CHAVARRIA, A. KIM		1-24-2019
CHECKED BY: ROBERT LOMELIN		1-24-2019
APPROVED BY: MAHMOOD KARIMZADEH, AIA, DEPUTY CITY ENGINEER		1-24-2019

CLIENT: DEPARTMENT OF RECREATION AND PARKS
GENERAL MANAGER: MICHAEL A. SHULL

SHEET TITLE: WALL SECTIONS

PROJECT: STUDIO CITY RECREATION CENTER

ADDRESS: 12621 RYE STREET, STUDIO CITY, CA 91604

WORK ORDER NO. E170267B

PLAN FILE NO. 860

DRAWING NO. A402

SHEET 72 OF SHEETS 211

PLOTTED:7/1/2019 11:28:38 AM

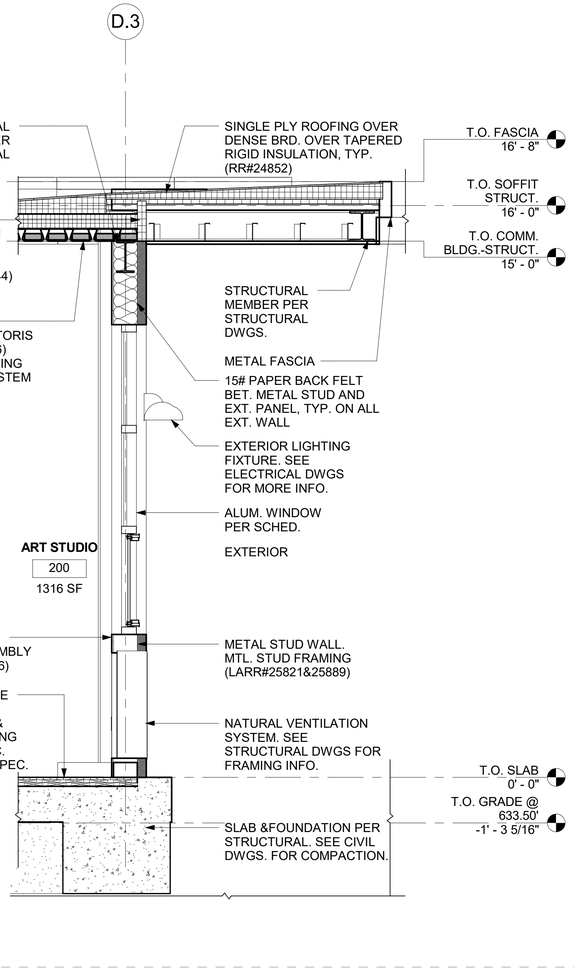

4 / A302 COMMUNITY ROOM WALL SECTION-SOUTH
1/2" = 1'-0"

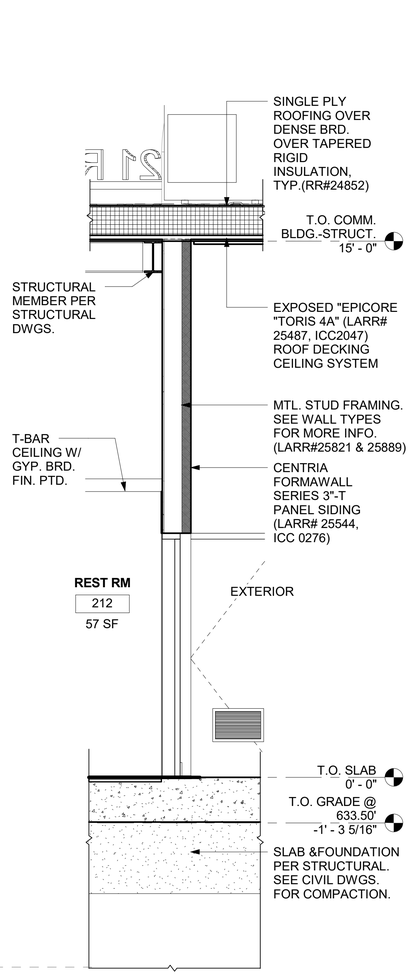

3 / A301 RESTROOM 212 WALL SECTION
1/2" = 1'-0"

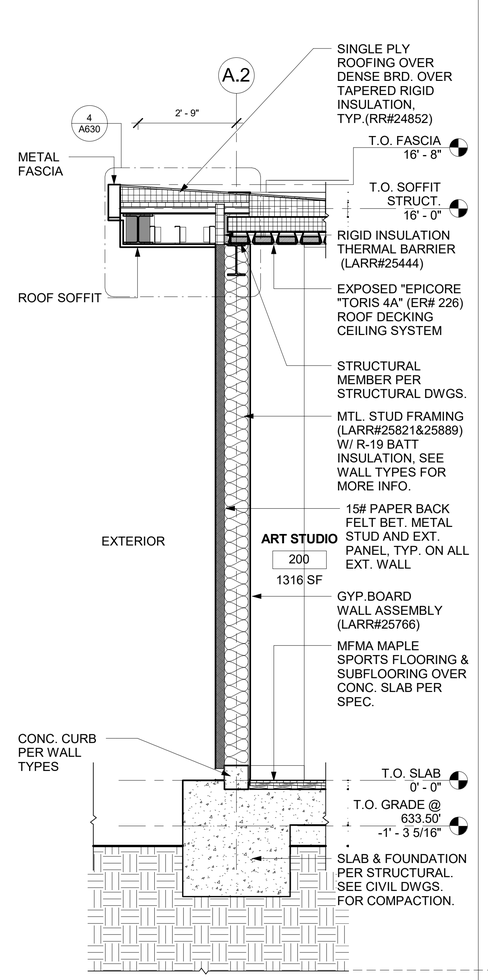

2 / A302 WALL SECTION-COMMUNITY ROOM
1/2" = 1'-0"

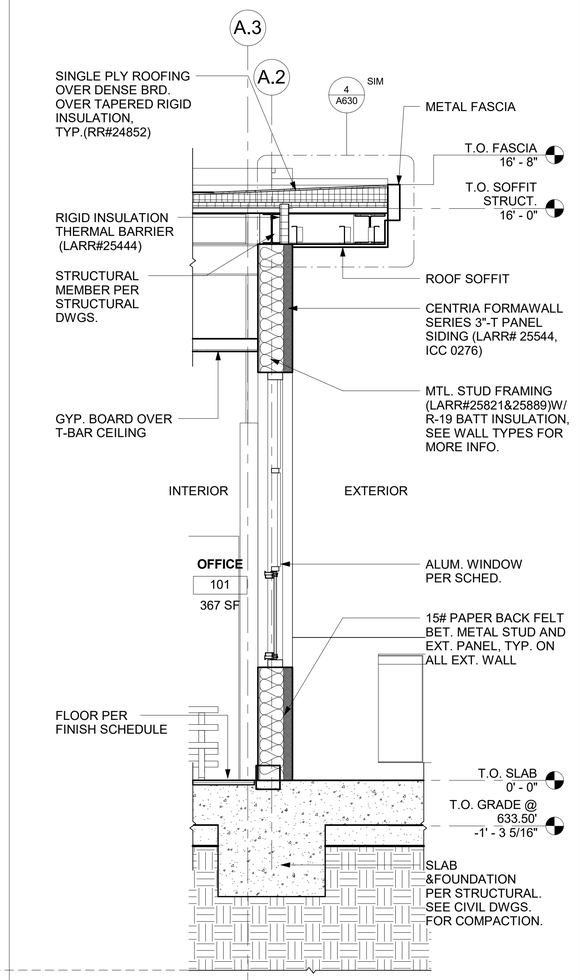

1 / A301 OFFICE 101 WALL SECTION
1/2" = 1'-0"

THE CITY OF LOS ANGELES OR ITS OFFICERS OR AGENTS SHALL NOT BE RESPONSIBLE FOR THE ACCURACY OR COMPLETENESS OF ELECTRONIC COPIES OF THIS PLAN SHEET.

FILE PATH: A360://Studio City Recreation Center/SCRC-Project Model_Central_Final.rvt

SHEET ISSUE DATE: 05/30/17

REVISION DATES (DESIGN STAGE ONLY)

DEPARTMENT OF PUBLIC WORKS
BUREAU OF ENGINEERING
CITY OF LOS ANGELES

ENGINEERING
CITY OF LOS ANGELES

NO.	REVISION DESCRIPTION	DATE	BY

BUILDING NO. -

INDEX NO. RP-300106

LICENSED ARCHITECT LOMELIN C. 23333 REGISTERED CALIFORNIA STATE OF CALIFORNIA

CITY ENGINEER
DATE: 1-24-2019

TED ALLEN, PE
ARCHITECTURAL DIVISION

ARCHITECT: ROBERT LOMELIN	LIC. NO.: C 23333	1-24-2019
DESIGNED BY: Z. AKHTER, M. CHAVARRIA, A. KIM, M. LAM		1-24-2019
DRAWN BY: Z. AKHTER, M. CHAVARRIA, A. KIM		1-24-2019
CHECKED BY: ROBERT LOMELIN		1-24-2019
APPROVED BY:MAHMOOD KARIMZADEH,AIA, DEPUTY CITY ENGINEER		1-24-2019

CITY OF LOS ANGELES

CLIENT: DEPARTMENT OF RECREATION AND PARKS
GENERAL MANAGER: MICHAEL A. SHULL

SHEET TITLE: WALL SECTIONS

PROJECT: STUDIO CITY RECREATION CENTER

ADDRESS: 12621 RYE STREET, STUDIO CITY, CA 91604

BUREAU OF ENGINEERING
OFFICIAL RECORD

WORK ORDER NO. E170267B
PLAN FILE NO. 860
DRAWING NO. A403
SHEET 73 OF SHEETS 211

PLOTTED:7/1/2019 11:28:47 AM

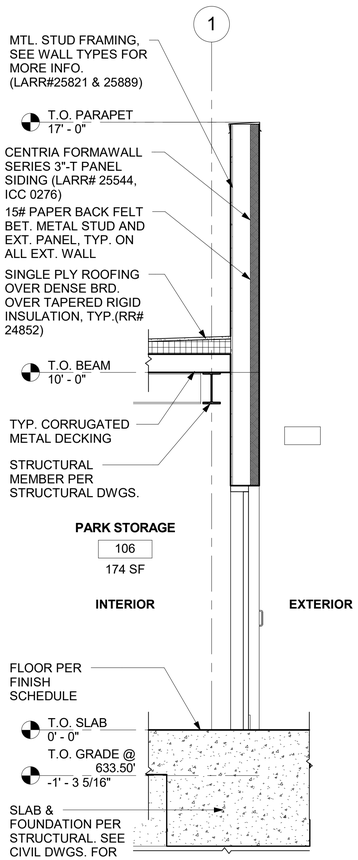

3 A301 PARK STORAGE WALL SECTION-WEST
1/2" = 1'-0"

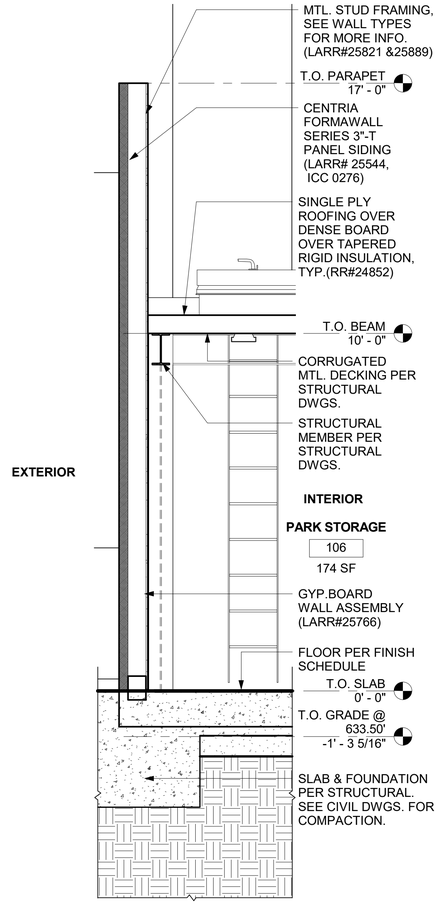

2 A301 PARK STORAGE WALL SECTION-NORTH
1/2" = 1'-0"

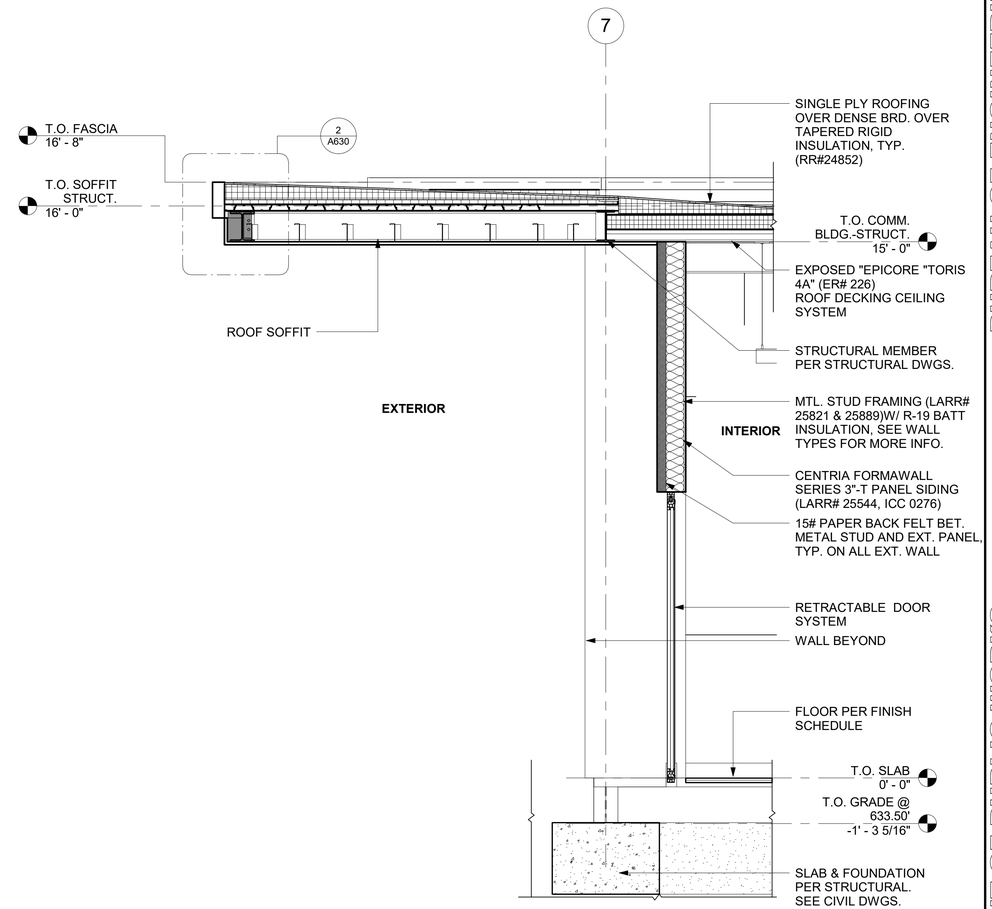

1 A301 COMMUNITY ROOM WALL SECTION- EAST
1/2" = 1'-0"

THE CITY OF LOS ANGELES OR ITS OFFICERS OR AGENTS SHALL NOT BE RESPONSIBLE FOR THE ACCURACY OR COMPLETENESS OF ELECTRONIC COPIES OF THIS PLAN SHEET.

FILE PATH: A360://Studio City Recreation Center/SCRC-Project Model_Central_Final.rvt

SHEET ISSUE DATE: 10/06/17

REVISION DATES (DESIGN STAGE ONLY)

BUREAU OF ENGINEERING
ENGINEERING
CITY OF LOS ANGELES

NO.	REVISION DESCRIPTION	DATE	BY

BUILDING NO. -

INDEX NO. RP-300106

LICENSED ARCHITECT TED ALLEN LIC. NO. C 23333 REGISTRATION EXPIRES 08/31/2019 STATE OF CALIFORNIA

DEPARTMENT OF PUBLIC WORKS

CITY ENGINEER	DATE:
TED ALLEN, PE	1-24-2019
ARCHITECTURAL DIVISION	1-24-2019
ARCHITECT: ROBERT LOMELIN LIC. NO.: C 23333	1-24-2019
DESIGNED BY: Z. AKHTER, M. CHAVARRIA, A. KIM, M. LAM	1-24-2019
DRAWN BY: Z. AKHTER, M. CHAVARRIA, A. KIM	
CHECKED BY: ROBERT LOMELIN	1-24-2019
APPROVED BY:MAHMOOD KARIMZADEH,AIA, DEPUTY CITY ENGINEER	1-24-2019

CITY OF LOS ANGELES

CLIENT: DEPARTMENT OF RECREATION AND PARKS
GENERAL MANAGER: MICHAEL A. SHULL

SHEET TITLE: WALL SECTIONS

PROJECT: STUDIO CITY RECREATION CENTER

ADDRESS: 12621 RYE STREET, STUDIO CITY, CA 91604

BUREAU OF ENGINEERING OFFICIAL RECORD

WORK ORDER NO. E170267B
PLAN FILE NO. 860
DRAWING NO. A404
SHEET 74 OF SHEETS 211

PLOTTED:7/1/2019 11:28:52 AM

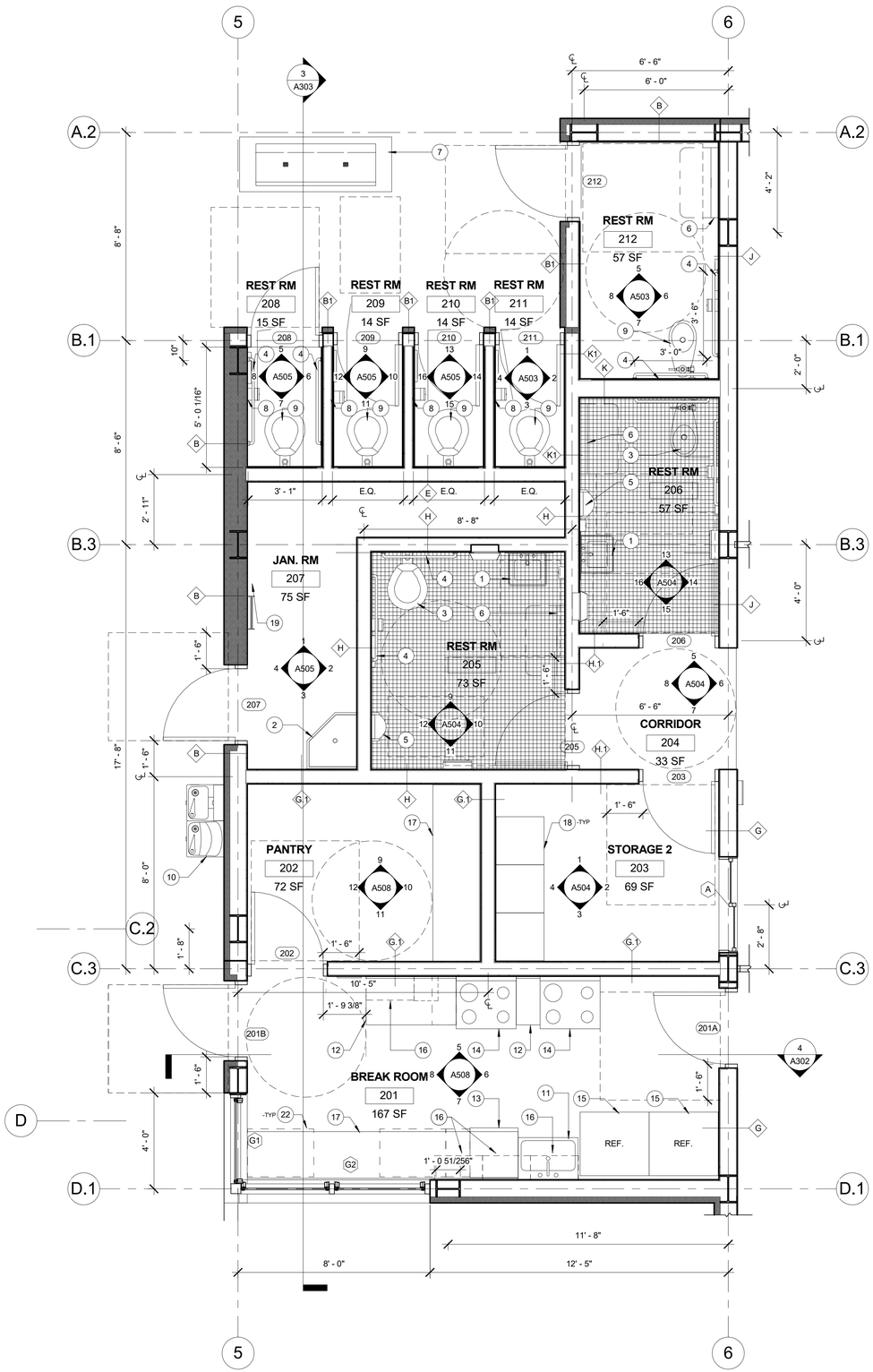

1 A101 ENLARGED FLOOR PLAN COMMUNITY BLDG.
3/8" = 1'-0"

ENLARGED FLOOR PLAN KEYNOTES:

1 WALL HUNG LAVATORY, SEE PLUMBLING DWGS.
2 MOP SINK W/ MOP HANGERS . SEE PLUMBING DWGS.
3 FLOOR MOUNTED WATER CLOSET.. SEE PLUMBING DWGS.
4 1 1/4" DIAM. X36", 42" STAINLESS STEEL GRAB BAR.
5 WALL HUNG STAINLESS STEEL URINAL. SEE PLUMBING DWGS.
6 DIAPER CHANGING STATION.
7 OUTDOOR LAVATORY. SEE PLUMBING DWGS.
8 SURFACE MOUNTED STAINLESS STEEL TOILET PAPER DISPENSER.
9 WALL MOUNTED STAINLESS STEEL WATER CLOSET. SEE PLUMBING DWGS.
10 ADA WATER FOUNTAIN. SEE PLUMBING DWGS.
11 STAINLESS STEEL SINK
12 COMMERCIAL GRADE QUARTZ COUNTERTOP
13 DISHWASHER.
14 ELECTRIC RANGE
15 REFRIGERATOR, N.I.C.
16 WALL MOUNTED CABINET
17 COMMERCIAL GRADE QUARTZ COUNTERTOP
18 TALL CABINET
19 FIXED LADDER, SEE DET. 2/A631
20 BUILDING PLAQUE. SIZE AND LOCATION TO BE DETERMINED BY ARCHITECT.
21 ADA SHOWER, SEE SHEET G110 FOR MORE INFO.
22 BASE CABINET
23 SHELVING
24 DISPLAY MESSAGE BOARD. SIZE AND LOCATION TO BE DETERMINED BY ARCHITECT.
25 LED TV PANEL. SIZE AND LOCATION TO BE DETERMINED BY ARCHITECT.

WALL TYPE LEGEND:

1 DOUBLE METAL STUD WALL@ 16" O.C., W/ INSULATED METAL PANEL ON THE EXT. & 5/8" TYPE X GYP BD IN THE INTERIOR. HORIZONTALLY BRACED TO STRUCTURAL BEAMS WITHIN WALL AT MAX. 10' VERTICAL SPACING. PHASE CHANGE MATERIAL ON EXTERIOR WALLS ONLY

2 DOUBLE METAL STUD WALL@ 16" O.C., W/ 5/8" TYPE X GYP BD. ON BOTH SIDES. HORIZONTALLY BRACED TO STRUCTURAL BEAMS WITHIN WALL AT MAX. 10' VERTICAL SPACING. PROVIDE R-19 BATT INSULATION.

3 METAL STUD WALL@ 16" O.C., W/ INSULATED METAL PANEL ON THE EXT & 5/8" TYPE X GYP BD IN THE INTERIOR. HORIZONTALLY BRACED TO STRUCTURAL BEAMS WITHIN WALL AT MAX. 10' VERTICAL SPACING. PHASE CHANGE MATERIAL ON EXTERIOR WALLS ONLY

4 METAL STUD WALL@ 16" O.C., FULL HEIGHT, W/ RIGID INSULATION. PHASE CHANGE MATERIAL ON EXTERIOR WALLS ONLY

5 LOW METAL STUD WALL @ 16" O.C. 8'-6" HIGH; 5/8" MOISTURE RESISTANT GYP BD. FINISH

6 LOW METAL STUD WALL @ -- O.C., 4' HIGH; W/ INSULATED METAL PANELON THE EXTERIOR AND 5/8" TYPE X GYP BD ON THE INT. PROVIDE PHASE CHANGE MATERIAL

7 METAL STUD WALL@ 16" O.C., W/ 5/8" TYPE X GYP BD ON BOTH SIDE. HORIZONTALLY BRACED TO STRUCTURAL BEAMS WITHIN WALL AT MAX. 10' VERTICAL SPACING.

GENERAL NOTES

1. REFER TO MECHANICAL, PLUMBING AND ELECTRICAL DRAWINGS FOR ADDITIONAL INFORMATION
2. SEE INTERIOR ELEVATION SHEETS FOR ADDITIONAL INFO.
3. SEE GENERAL SHEET G105 FOR COUNTER TOP REQUIREMENTS
4. SEE GENERAL SHEET G108 FOR DOOR ACCESS REQUIREMENTS.
5. SEE GENERAL SHEETS G109 & G1.10 FOR WATER CLOSET AND URINAL REQUIREMENTS
6. SEE GENERAL SHEET G1.13 FOR KITCHEN LAYOUT REQUIREMENTS.

BUREAU OF ENGINEERING OFFICIAL RECORD

N

ENGINEERING CITY OF LOS ANGELES

BUREAU OF ENGINEERING

NO.	REVISION DESCRIPTION	DATE	BY

BUILDING NO. -

INDEX NO. RP-300106

LICENSED ARCHITECT TED ALLEN LIC. NO. C 23333 RENEWAL 08/31/2019 STATE OF CALIFORNIA

DEPARTMENT OF PUBLIC WORKS CITY OF LOS ANGELES

TED ALLEN, PE — CITY ENGINEER — DATE: 1-24-2019

ARCHITECTURAL DIVISION	LIC. NO.: C 23333
ARCHITECT: ROBERT LOMELIN	1-24-2019
DESIGNED BY: Z. AKHTER, M. CHAVARRIA, A. KIM	M. LAM 1-24-2019
DRAWN BY: Z. AKHTER, M. CHAVARRIA, A. KIM	1-24-2019
CHECKED BY: ROBERT LOMELIN	1-24-2019
APPROVED BY:MAHMOOD KARIMZADEH,AIA, DEPUTY CITY ENGINEER	1-24-2019

CLIENT: DEPARTMENT OF RECREATION AND PARKS
GENERAL MANAGER: MICHAEL A. SHULL

SHEET TITLE: ENLARGED PLANS

PROJECT: STUDIO CITY RECREATION CENTER

ADDRESS: 12621 RYE STREET, STUDIO CITY, CA 91604

WORK ORDER NO. E170267B
PLAN FILE NO. 860
DRAWING NO. A501
SHEET 75 OF SHEETS 211

PLOTTED:7/1/2019 11:28:58 AM

THE CITY OF LOS ANGELES OR ITS OFFICERS OR AGENTS SHALL NOT BE RESPONSIBLE FOR THE ACCURACY OR COMPLETENESS OF ELECTRONIC COPIES OF THIS PLAN SHEET.

FILE PATH: A360://Studio City Recreation Center/SCRC-Project Model_Central_Final.rvt

SHEET ISSUE DATE: 04/26/17

REVISION DATES (DESIGN STAGE ONLY)

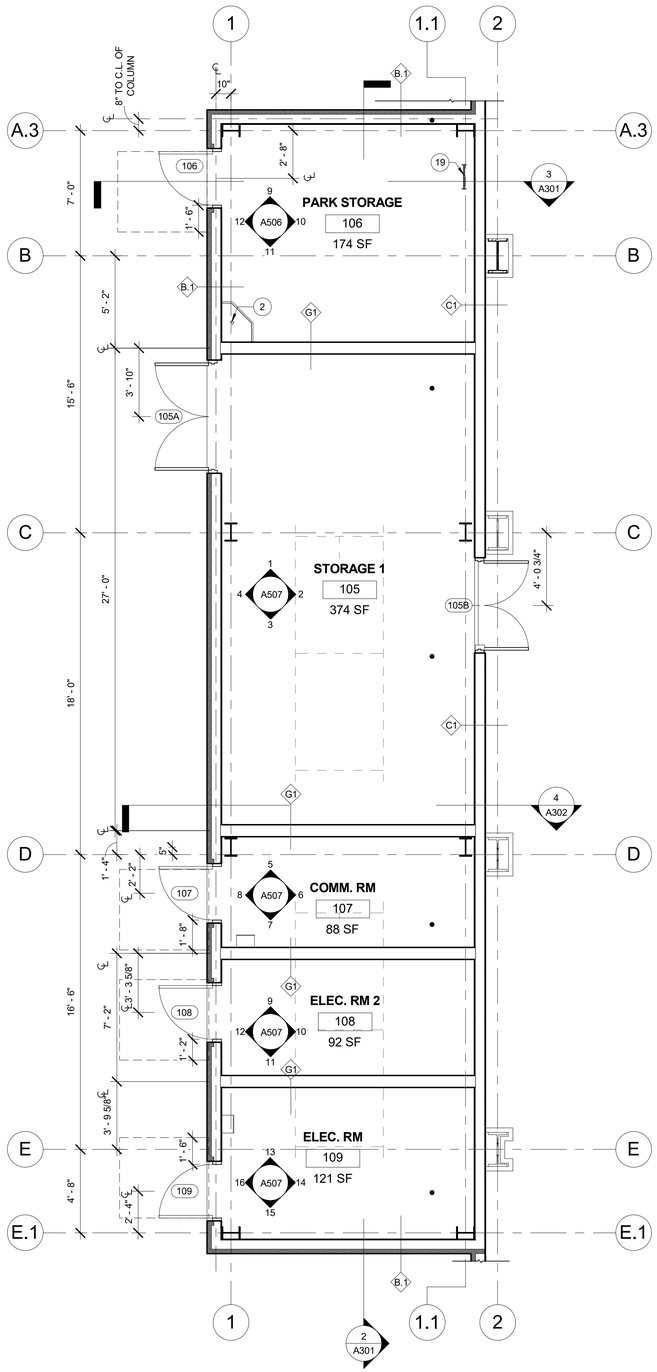

2 A101 ENLARGED FLOOR PLAN WEST BLDG.
1/4" = 1'-0"

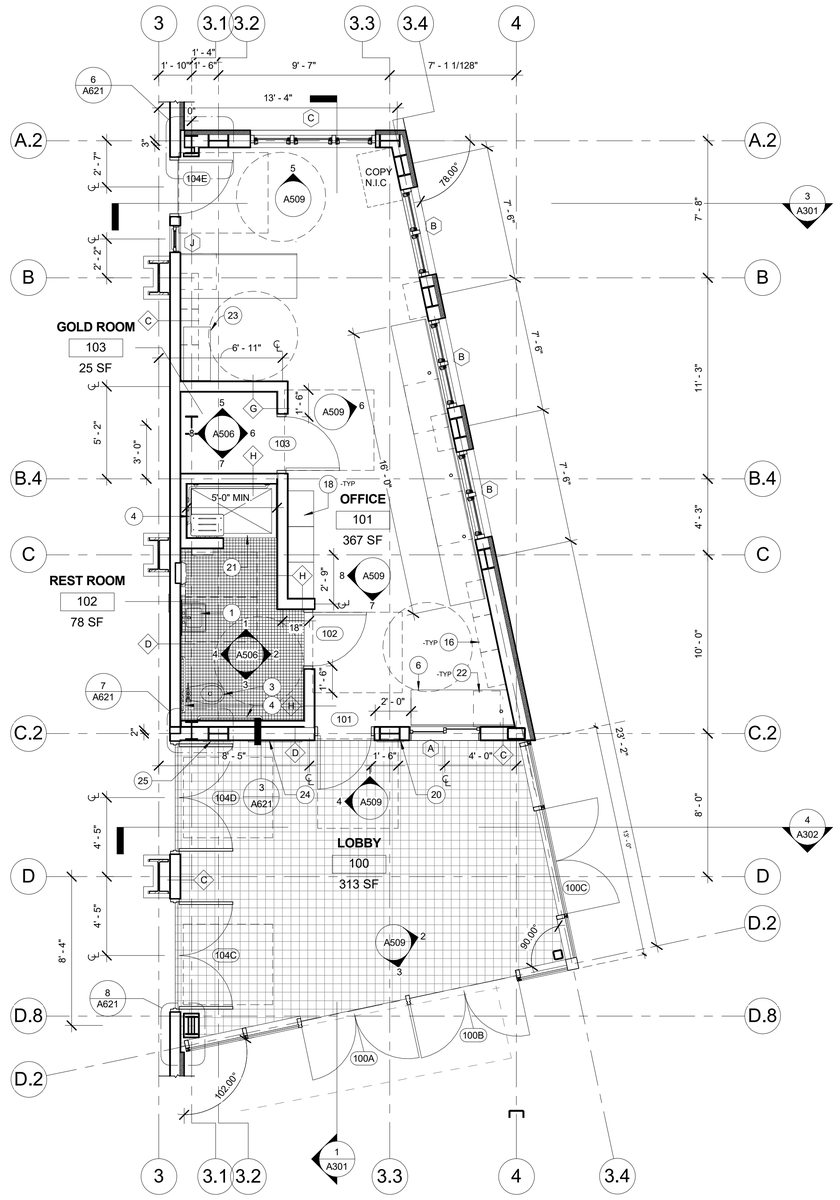

1 A101 ENLARGED FLOOR PLAN LOBBY AREA
1/4" = 1'-0"

ENLARGED FLOOR PLAN

1 WALL HUNG LAVATORY, SEE PLUMBLING DWGS.
2 MOP SINK W/ MOP HANGERS . SEE PLUMBING DWGS.
3 FLOOR MOUNTED WATER CLOSET.. SEE PLUMBING DWGS.
4 1 1/4" DIAM. X36", 42" STAINLESS STEEL GRAB BAR.
5 WALL HUNG STAINLESS STEEL URINAL. SEE PLUMBING DWGS.
6 DIAPER CHANGING STATION.
7 OUTDOOR LAVATORY. SEE PLUMBING DWGS.
8 SURFACE MOUNTED STAINLESS STEEL TOILET PAPER DISPENSER.
9 WALL MOUNTED STAINLESS STEEL WATER CLOSET. SEE PLUMBING DWGS.
10 ADA WATER FOUNTAIN. SEE PLUMBING DWGS.
11 STAINLESS STEEL SINK
12 COMMERCIAL GRADE QUARTZ COUNTERTOP
13 DISHWASHER.
14 ELECTRIC RANGE
15 REFRIGERATOR. N.I.C.
16 WALL MOUNTED CABINET
17 COMMERCIAL GRADE QUARTZ COUNTERTOP
18 TALL CABINET
19 FIXED LADDER, SEE DET. 2/A631
20 BUILDING PLAQUE. SIZE AND LOCATION TO BE DETERMINED BY ARCHITECT.
21 ADA SHOWER, SEE SHEET G110 FOR MORE INFO.
22 BASE CABINET
23 SHELVING
24 DISPLAY MESSAGE BOARD. SIZE AND LOCATION TO BE DETERMINED BY ARCHITECT.
25 LED TV PANEL. SIZE AND LOCATION TO BE DETERMINED BY ARCHITECT.

WALL TYPE LEGEND:

1 DOUBLE METAL STUD WALL@ 16" O.C., W/ INSULATED METAL PANEL ON THE EXT. & 5/8" TYPE X GYP BD IN THE INTERIOR. HORIZONTALLY BRACED TO STRUCTURAL BEAMS WITHIN WALL AT MAX. 10' VERTICAL SPACING. PHASE CHANGE MATERIAL ON EXTERIOR WALLS ONLY

2 DOUBLE METAL STUD WALL@ 16" O.C., W/ 5/8" TYPE X GYP BD. ON BOTH SIDES. HORIZONTALLY BRACED TO STRUCTURAL BEAMS WITHIN WALL AT MAX. 10' VERTICAL SPACING. PROVIDE R-19 BATT INSULATION.

3 METAL STUD WALL@ 16" O.C., W/ INSULATED METAL PANEL ON THE EXT & 5/8" TYPE X GYP BD IN THE INTERIOR. HORIZONTALLY BRACED TO STRUCTURAL BEAMS WITHIN WALL AT MAX. 10' VERTICAL SPACING. PHASE CHANGE MATERIAL ON EXTERIOR WALLS ONLY

4 METAL STUD WALL@ 16" O.C., FULL HEIGHT, W/ RIGID INSULATION. PHASE CHANGE MATERIAL ON EXTERIOR WALLS ONLY

5 LOW METAL STUD WALL @ 16" O.C. 8'-6" HIGH; 5/8" MOISTURE RESISTANT GYP BD. FINISH

6 LOW METAL STUD WALL @ -- O.C., 4' HIGH; W/ INSULATED METAL PANELON THE EXTERIOR AND 5/8" TYPE X GYP BD ON THE INT. PROVIDE PHASE CHANGE MATERIAL

7 METAL STUD WALL@ 16" O.C., W/ 5/8" TYPE X GYP BD ON BOTH SIDE. HORIZONTALLY BRACED TO STRUCTURAL BEAMS WITHIN WALL AT MAX. 10' VERTICAL SPACING.

GENERAL NOTES

1. REFER TO MECHANICAL, PLUMBING AND ELECTRICAL DRAWINGS FOR ADDITIONAL INFORMATION
2. SEE INTERIOR ELEVATION SHEETS FOR ADDITIONAL INFO.
3. SEE GENERAL SHEET G105 FOR COUNTER TOP REQUIREMENTS
4. SEE GENERAL SHEET G108 FOR DOOR ACCESS REQUIREMENTS.
5. SEE GENERAL SHEETS G109 & G1.10 FOR WATER CLOSET AND URINAL REQUIREMENTS
6. SEE GENERAL SHEET G1.10 & G1.11 FOR SHOWER LAYOUT REQUIREMENTS.
7. REFER TO BACKING PLATE DETAIL 3/A6.21 . S.S.D. FOR MORE INFO.

BUREAU OF ENGINEERING OFFICIAL RECORD

N

ENGINEERING
CITY OF LOS ANGELES

BUREAU OF ENGINEERING

NO.	REVISION DESCRIPTION	DATE	BY

BUILDING NO. -
INDEX NO. RP-300106

LICENSED ARCHITECT TED ALLEN LAM LIC. NO. C 23333 REG. STATE OF CALIFORNIA

PUBLIC WORKS DEPARTMENT OF

CITY OF LOS ANGELES

CITY ENGINEER	DATE:	1-24-2019
TED ALLEN, PE	ARCHITECTURAL DIVISION	LIC. NO.: C 23333
ARCHITECT: ROBERT LOMELIN		1-24-2019
DESIGNED BY: Z. AKHTER, M. CHAVARRIA, A. KIM, M. LAM		1-24-2019
DRAWN BY: Z. AKHTER, M. CHAVARRIA, A. KIM		1-24-2019
CHECKED BY: ROBERT LOMELIN		CITY ENGINEER 1-24-2019
APPROVED BY:MAHMOOD KARIMZADEH,AIA, DEPUTY CITY ENGINEER		

CLIENT: DEPARTMENT OF RECREATION AND PARKS
GENERAL MANAGER: MICHAEL A. SHULL

SHEET TITLE: ENLARGED PLANS

PROJECT: STUDIO CITY RECREATION CENTER

ADDRESS: 12621 RYE STREET, STUDIO CITY, CA 91604

WORK ORDER NO. E170267B
PLAN FILE NO. 860
DRAWING NO. A502
SHEET 76 OF SHEETS 211

PLOTTED:7/1/2019 11:29:03 AM

THE CITY OF LOS ANGELES OR ITS OFFICERS OR AGENTS SHALL NOT BE RESPONSIBLE FOR THE ACCURACY OR COMPLETENESS OF ELECTRONIC COPIES OF THIS PLAN SHEET.

FILE PATH: A360://Studio City Recreation Center/SCRC-Project Model_Central_Final.rvt

SHEET ISSUE DATE: 05/26/17

REVISION DATES (DESIGN STAGE ONLY)

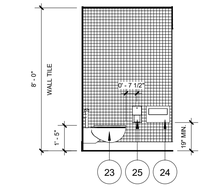

4 A501 REST RM 211 - WEST
1/4" = 1'-0"

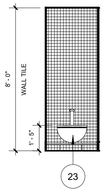

3 A501 REST RM 211 - SOUTH
1/4" = 1'-0"

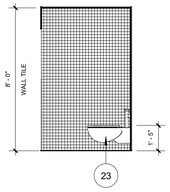

2 A501 REST RM 211 - EAST
1/4" = 1'-0"

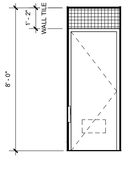

1 A501 REST RM 211 - NORTH
1/4" = 1'-0"

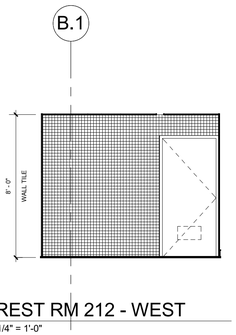

8 A501 REST RM 212 - WEST
1/4" = 1'-0"

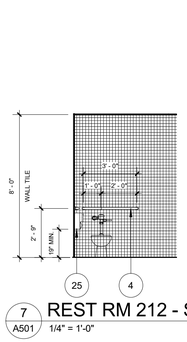

7 A501 REST RM 212 - SOUTH
1/4" = 1'-0"

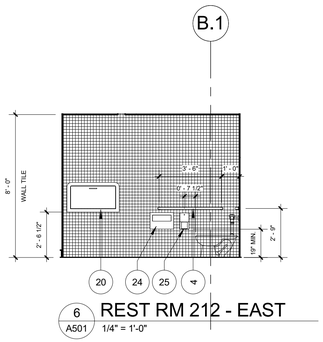

6 A501 REST RM 212 - EAST
1/4" = 1'-0"

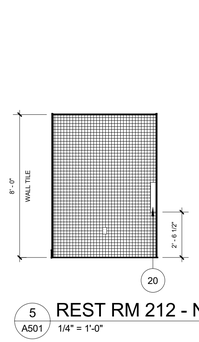

5 A501 REST RM 212 - NORTH
1/4" = 1'-0"

INTERIOR KEYNOTES

4	1 1/4" DIAM. X36", 42" STAINLESS STEEL GRAB BAR
20	DIAPER CHANGING STATION
23	WALL HUNG STAINLESS STEEL WATER CLOSET W/ SEAT COVER LID. SEE PLUMBING DWGS.
24	SEAT COVER DISPENSER
25	TOILET TISSUE CABINET
32	TILE OVER 5/8" CEMENT BOARD
47	FLOOR MOUNTED STAINLESS STEEL WATER CLOSET W/ SEAT COVER LID. SEE PLUMBING DWGS.

BUREAU OF ENGINEERING
OFFICIAL RECORD

GENERAL NOTES

1. ALL EXTERIOR WATER CLOSET MUST HAVE SEAT COVER LIDS
2. ALL EXTERIOR WATER CLOSET MUST BE STAINLESS STEEL

THE CITY OF LOS ANGELES OR ITS OFFICERS OR AGENTS SHALL NOT BE RESPONSIBLE FOR THE ACCURACY OR COMPLETENESS OF ELECTRONIC COPIES OF THIS PLAN SHEET.

FILE PATH: A360://Studio City Recreation Center/SCRC-Project Model_Central_Final.rvt

SHEET ISSUE DATE: 10/10/17

REVISION DATES (DESIGN STAGE ONLY)

ENGINEERING
CITY OF LOS ANGELES

BUREAU OF ENGINEERING

NO.	REVISION DESCRIPTION	DATE	BY

BUILDING NO. -

INDEX NO. RP-300106

LICENSED ARCHITECT TOMILYN LOMELIN LIC. NO. C 23333 RENEWAL 08/31/2019 STATE OF CALIFORNIA

DEPARTMENT OF PUBLIC WORKS

TED ALLEN, PE
CITY ENGINEER

		DATE:
ARCHITECTURAL DIVISION		
ARCHITECT: ROBERT LOMELIN	LIC. NO.: C 23333	1-24-2019
DESIGNED BY: Z. AKHTER, M. CHAVARRIA, A. KIM, M. LAM		1-24-2019
DRAWN BY: Z. AKHTER, M. CHAVARRIA, A. KIM		1-24-2019
CHECKED BY: ROBERT LOMELIN		1-24-2019
APPROVED BY:MAHMOOD KARIMZADEH,AIA, DEPUTY CITY ENGINEER		1-24-2019

CITY OF LOS ANGELES

CLIENT: DEPARTMENT OF RECREATION AND PARKS
GENERAL MANAGER: MICHAEL A. SHULL

SHEET TITLE: INTERIOR ELEVATIONS

PROJECT: STUDIO CITY RECREATION CENTER

ADDRESS: 12621 RYE STREET, STUDIO CITY, CA 91604

WORK ORDER NO. E170267B
PLAN FILE NO. 860
DRAWING NO. A503
SHEET 77 OF SHEETS 211

PLOTTED:7/1/2019 11:29:09 AM

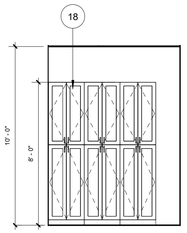

4 A501 STORAGE 2 RM 203 WEST
1/4" = 1'-0"

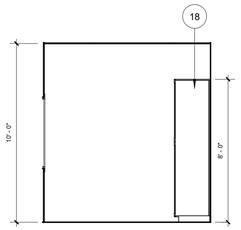

3 A501 STORAGE 2 RM 203 SOUTH
1/4" = 1'-0"

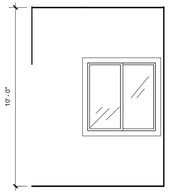

2 A501 STORAGE 2 RM 203 EAST
1/4" = 1'-0"

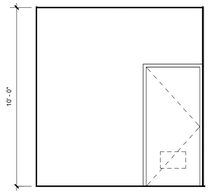

1 A501 STORAGE 2 RM 203 NORTH
1/4" = 1'-0"

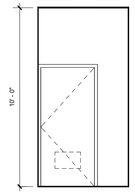

8 A501 CORRIDOR 204 WEST
1/4" = 1'-0"

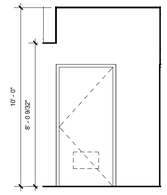

7 A501 CORRIDOR 204 SOUTH
1/4" = 1'-0"

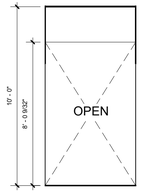

6 A501 CORRIDOR 204 EAST
1/4" = 1'-0"

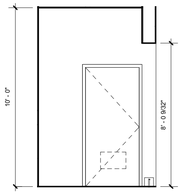

5 A501 CORRIDOR 204 NORTH
1/4" = 1'-0"

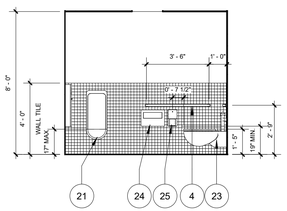

12 A501 REST RM 205 - WEST
1/4" = 1'-0"

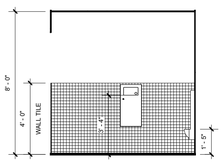

11 A501 REST RM 205 - SOUTH
1/4" = 1'-0"

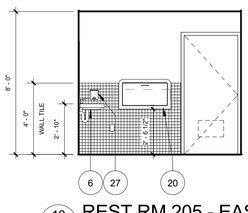

10 A501 REST RM 205 - EAST
1/4" = 1'-0"

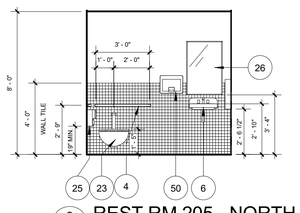

9 A501 REST RM 205 - NORTH
1/4" = 1'-0"

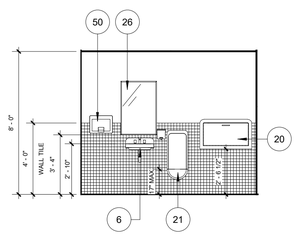

16 A501 REST RM 206 - WEST
1/4" = 1'-0"

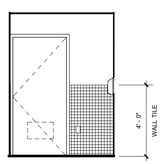

15 A501 REST RM 206 - SOUTH
1/4" = 1'-0"

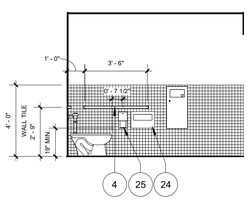

14 A501 REST RM 206 - EAST
1/4" = 1'-0"

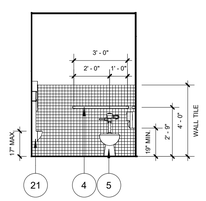

13 A501 REST RM 206 - NORTH
1/4" = 1'-0"

INTERIOR KEYNOTES

3	CONTINUOUS PAINTED CEMENT BOARD
4	1 1/4" DIAM. X36", 42" STAINLESS STEEL GRAB BAR
5	FLOOR MOUNTED WATER CLOSET. SEE PLUMBING DWGS.
6	LAVATORY. SEE PLUMBING DWGS.
18	CABINETS.SEE SHEET A626.
20	DIAPER CHANGING STATION
21	WALL HUNG URINAL. SEE PLUMBING DWGS.
23	WALL HUNG STAINLESS STEEL WATER CLOSET W/ SEAT COVER LID. SEE PLUMBING DWGS.
24	SEAT COVER DISPENSER
25	TOILET TISSUE CABINET
26	FRAMELESS STAINLESS STEEL MIRROR
27	SOAP DISPENSER
32	TILE OVER 5/8" CEMENT BOARD
50	RECESSED ELECTRIC HAND DRYER, SEE ELECTRICAL
54	GYP BD, PNT.

GENERAL NOTES

1. ALL EXTERIOR WATER CLOSET MUST HAVE SEAT COVER LIDS
2. ALL EXTERIOR WATER CLOSET MUST BE STAINLESS STEEL

THE CITY OF LOS ANGELES OR ITS OFFICERS OR AGENTS SHALL NOT BE RESPONSIBLE FOR THE ACCURACY OR COMPLETENESS OF ELECTRONIC COPIES OF THIS PLAN SHEET.

FILE PATH: A360://Studio City Recreation Center/SCRC-Project Model_Central_Final.rvt

SHEET ISSUE DATE: 10/10/17

REVISION DATES (DESIGN STAGE ONLY)

BUREAU OF ENGINEERING
DEPARTMENT OF PUBLIC WORKS
CITY OF LOS ANGELES

ENGINEERING
CITY OF LOS ANGELES

NO.	REVISION DESCRIPTION	DATE	BY

BUILDING NO. -

INDEX NO. RP-300106

LICENSED ARCHITECT TED ALLEN LIC. NO. C 23333 REGISTRATION STATE OF CALIFORNIA

TED ALLEN, PE — CITY ENGINEER — DATE: 1-24-2019

ARCHITECTURAL DIVISION
ARCHITECT: ROBERT LOMELIN — LIC. NO.: C 23333
DESIGNED BY: Z. AKHTER, M. CHAVARRIA, A. KIM, M. LAM — 1-24-2019
DRAWN BY: Z. AKHTER, M. CHAVARRIA, A. KIM — 1-24-2019
CHECKED BY: ROBERT LOMELIN — 1-24-2019
APPROVED BY:MAHMOOD KARIMZADEH,AIA, DEPUTY CITY ENGINEER — 1-24-2019

CLIENT: DEPARTMENT OF RECREATION AND PARKS
GENERAL MANAGER: MICHAEL A. SHULL

SHEET TITLE: INTERIOR ELEVATIONS

PROJECT: STUDIO CITY RECREATION CENTER

ADDRESS: 12621 RYE STREET, STUDIO CITY, CA 91604

WORK ORDER NO. E170267B
PLAN FILE NO. 860
DRAWING NO. A504
SHEET 78 OF SHEETS 211

PLOTTED:7/1/2019 11:29:17 AM

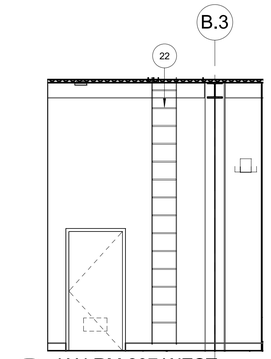

4 A501 JAN RM 207 WEST
1/4" = 1'-0"

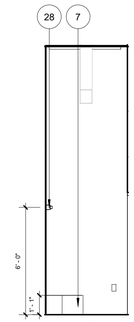

3 A501 JAN RM 207 SOUTH
1/4" = 1'-0"

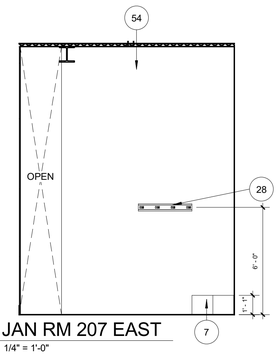

2 A501 JAN RM 207 EAST
1/4" = 1'-0"

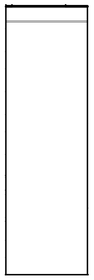

1 A501 JAN RM 207 NORTH
1/4" = 1'-0"

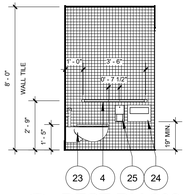

8 A501 REST RM 208 - WEST
1/4" = 1'-0"

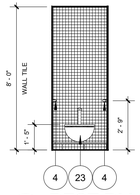

7 A501 REST RM 208 - SOUTH
1/4" = 1'-0"

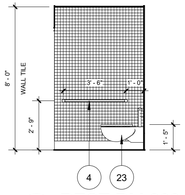

6 A501 REST RM 208 - EAST
1/4" = 1'-0"

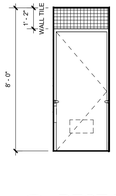

5 A501 REST RM 208 - NORTH
1/4" = 1'-0"

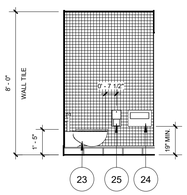

12 A501 REST RM 209 - WEST
1/4" = 1'-0"

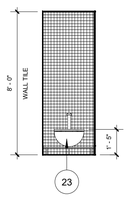

11 A501 REST RM 209 - SOUTH
1/4" = 1'-0"

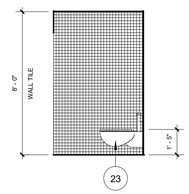

10 A501 REST RM 209 - EAST
1/4" = 1'-0"

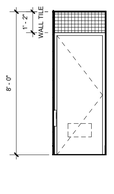

9 A501 REST RM 209 - NORTH
1/4" = 1'-0"

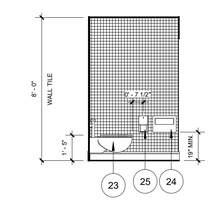

16 A501 REST RM 210 - WEST
1/4" = 1'-0"

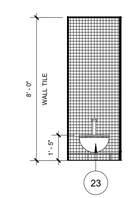

15 A501 REST RM 210 - SOUTH
1/4" = 1'-0"

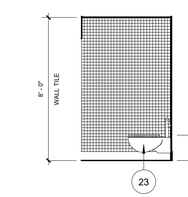

14 A501 REST RM 210 - EAST
1/4" = 1'-0"

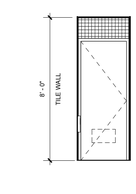

13 A501 REST RM 210 - NORTH
1/4" = 1'-0"

INTERIOR KEYNOTES

4	1 1/4" DIAM. X36", 42" STAINLESS STEEL GRAB BAR
7	MOP SINK
8	STRUCTURAL MEMBER PER STRUCTURAL DWGS.
22	FIXED LADDER
23	WALL HUNG STAINLESS STEEL WATER CLOSET W/ SEAT COVER LID. SEE PLUMBING DWGS.
24	SEAT COVER DISPENSER
25	TOILET TISSUE CABINET
28	STAINLESS STEEL MOP AND BROOM HOLDER
32	TILE OVER 5/8" CEMENT BOARD
54	GYP BD, PNT.

GENERAL NOTES

1. ALL EXTERIOR WATER CLOSET MUST HAVE SEAT COVER LIDS
2. ALL EXTERIOR WATER CLOSET MUST BE STAINLESS STEEL
3. ALL EXPOSED STRUCTURAL CONNECTIONS TO HAVE ARCHITECTURAL FINISH & PAINT COLORS TO MATCH ADJACENT SURFACES. SEE FINISH SCHEDULE FOR LOCATION OF INTUMESCENT PAINT.

BUREAU OF ENGINEERING
OFFICIAL RECORD

THE CITY OF LOS ANGELES OR ITS OFFICERS OR AGENTS SHALL NOT BE RESPONSIBLE FOR THE ACCURACY OR COMPLETENESS OF ELECTRONIC COPIES OF THIS PLAN SHEET.

FILE PATH: A360://Studio City Recreation Center/SCRC-Project Model_Central_Final.rvt

SHEET ISSUE DATE: 10/10/17

REVISION DATES (DESIGN STAGE ONLY)

CITY OF LOS ANGELES
DEPARTMENT OF PUBLIC WORKS
BUREAU OF ENGINEERING

ENGINEERING
CITY OF LOS ANGELES

NO.	REVISION DESCRIPTION	DATE	BY

BUILDING NO. -

INDEX NO. RP-300106

LICENSED ARCHITECT TONI L. LOMELIN LIC. NO. C 23333 RENEWAL 08/31/2021 STATE OF CALIFORNIA

TED ALLEN, PE
CITY ENGINEER

		DATE:
ARCHITECTURAL DIVISION		
ARCHITECT: ROBERT LOMELIN	LIC. NO.: C 23333	1-24-2019
DESIGNED BY: Z. AKHTER, M. CHAVARRIA, A. KIM, M. LAM		1-24-2019
DRAWN BY: Z. AKHTER, M. CHAVARRIA, A. KIM		1-24-2019
CHECKED BY: ROBERT LOMELIN		1-24-2019
APPROVED BY:MAHMOOD KARIMZADEH,AIA, DEPUTY CITY ENGINEER		1-24-2019

CLIENT: DEPARTMENT OF RECREATION AND PARKS
GENERAL MANAGER: MICHAEL A. SHULL

SHEET TITLE: INTERIOR ELEVATIONS

PROJECT: STUDIO CITY RECREATION CENTER

ADDRESS: 12621 RYE STREET, STUDIO CITY, CA 91604

WORK ORDER NO. E170267B
PLAN FILE NO. 860
DRAWING NO. A505
SHEET 79 OF SHEETS 211

PLOTTED:7/1/2019 11:29:26 AM

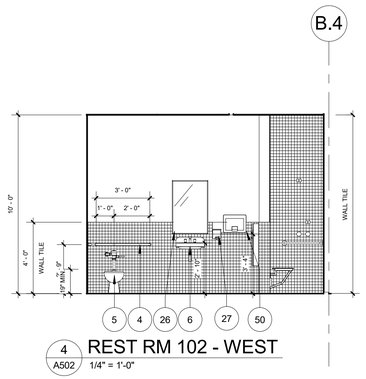

4 A502 REST RM 102 - WEST
1/4" = 1'-0"

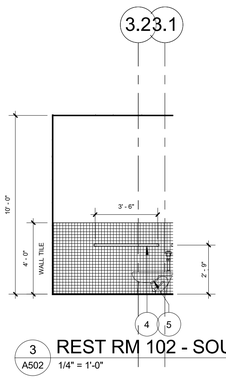

3 A502 REST RM 102 - SOUTH
1/4" = 1'-0"

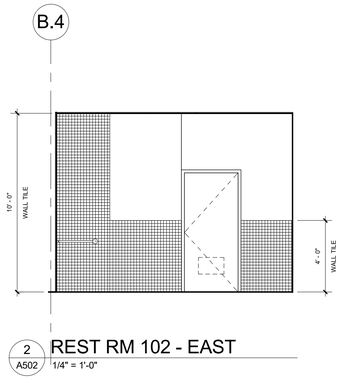

2 A502 REST RM 102 - EAST
1/4" = 1'-0"

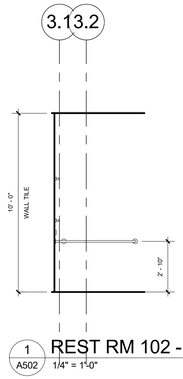

1 A502 REST RM 102 - NORTH
1/4" = 1'-0"

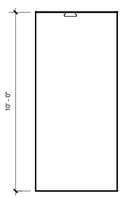

8 A502 GOLD RM 103 WEST
1/4" = 1'-0"

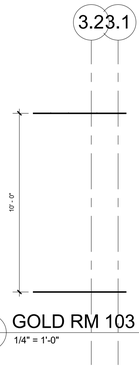

7 A502 GOLD RM 103 SOUTH
1/4" = 1'-0"

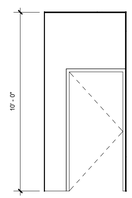

6 A502 GOLD RM 103 EAST
1/4" = 1'-0"

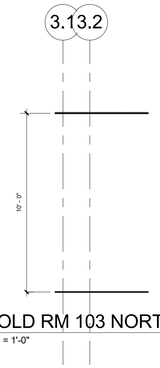

5 A502 GOLD RM 103 NORTH
1/4" = 1'-0"

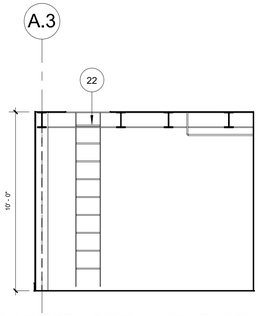

10 A502 PARK STORAGE RM 105 EAST
1/4" = 1'-0"

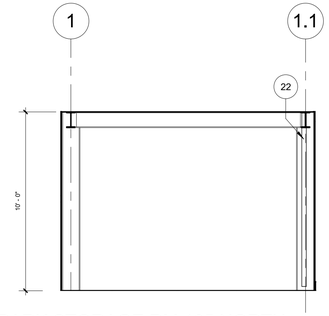

9 A502 PARK STORAGE RM 105 NORTH
1/4" = 1'-0"

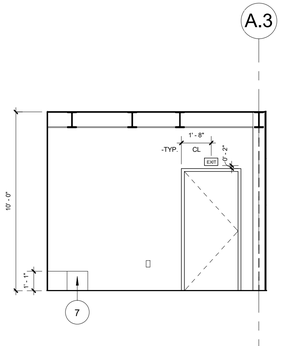

12 A502 PARK STORAGE RM 105 WEST
1/4" = 1'-0"

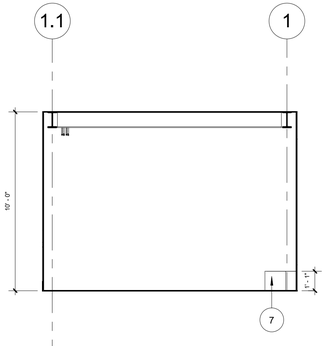

11 A502 PARK STORAGE RM 105 SOUTH
1/4" = 1'-0"

INTERIOR KEYNOTES

3	CONTINUOUS PAINTED CEMENT BOARD
4	1 1/4" DIAM. X36", 42" STAINLESS STEEL GRAB BAR
5	FLOOR MOUNTED WATER CLOSET. SEE PLUMBING DWGS.
6	LAVATORY. SEE PLUMBING DWGS.
7	MOP SINK
22	FIXED LADDER
26	FRAMELESS STAINLESS STEEL MIRROR
27	SOAP DISPENSER
31	ADA SHOWER. SEE SHEET G110 FOR MORE INFO.
32	TILE OVER 5/8" CEMENT BOARD
50	RECESSED ELECTRIC HAND DRYER, SEE ELECTRICAL
54	GYP BD, PNT.

GENERAL NOTES

1. ALL EXTERIOR WATER CLOSET MUST HAVE SEAT COVER LIDS
2. ALL EXTERIOR WATER CLOSET MUST BE STAINLESS STEEL
3. ALL EXPOSED STRUCTURAL CONNECTIONS TO HAVE ARCHITECTURAL FINISH & PAINT COLORS TO MATCH ADJACENT SURFACES. SEE FINISH SCHEDULE FOR LOCATION OF INTUMESCENT PAINT.

BUREAU OF ENGINEERING
OFFICIAL RECORD

ENGINEERING
CITY OF LOS ANGELES

BUREAU OF ENGINEERING

NO.	REVISION DESCRIPTION	DATE	BY

BUILDING NO. -

INDEX NO. RP-300106

LICENSED ARCHITECT TIMOTHY C. LOMELIN C 23333 RENEWAL 08/31/2021 STATE OF CALIFORNIA

DEPARTMENT OF PUBLIC WORKS

CITY ENGINEER		DATE:
TED ALLEN, PE		
ARCHITECTURAL DIVISION		
ARCHITECT: ROBERT LOMELIN	LIC. NO.: C 23333	1-24-2019
DESIGNED BY: Z. AKHTER, M. CHAVARRIA, A. KIM, M. LAM		1-24-2019
DRAWN BY: Z. AKHTER, M. CHAVARRIA, A. KIM		1-24-2019
CHECKED BY: ROBERT LOMELIN		1-24-2019
APPROVED BY:MAHMOOD KARIMZADEH,AIA, DEPUTY CITY ENGINEER		1-24-2019

CITY OF LOS ANGELES

CLIENT: DEPARTMENT OF RECREATION AND PARKS
GENERAL MANAGER: MICHAEL A. SHULL

SHEET TITLE: INTERIOR ELEVATIONS

PROJECT: STUDIO CITY RECREATION CENTER

ADDRESS: 12621 RYE STREET, STUDIO CITY, CA 91604

WORK ORDER NO. E170267B

PLAN FILE NO. 860

DRAWING NO. A506

SHEET 80 OF SHEETS 211

PLOTTED:7/1/2019 11:29:32 AM

SHEET ISSUE DATE:04/27/17

REVISION DATES (DESIGN STAGE ONLY)

FILE PATH: A360://Studio City Recreation Center/SCRC-Project Model_Central_Final.rvt

THE CITY OF LOS ANGELES OR ITS OFFICERS OR AGENTS SHALL NOT BE RESPONSIBLE FOR THE ACCURACY OR COMPLETENESS OF ELECTRONIC COPIES OF THIS PLAN SHEET.

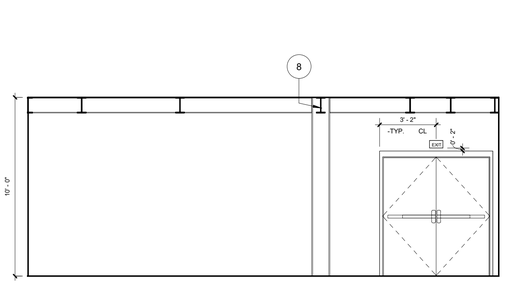

4 A502 STORAGE 1 RM 106 WEST
1/4" = 1'-0"

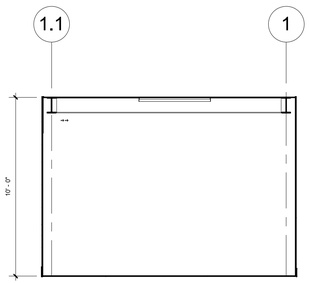

3 A502 STORAGE 1 RM 106 SOUTH
1/4" = 1'-0"

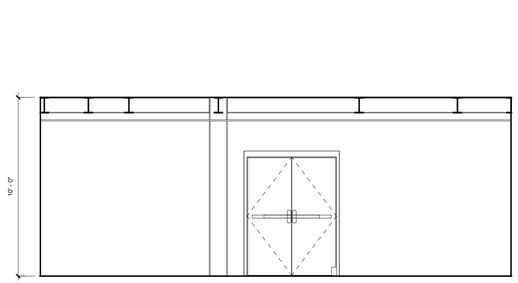

2 A502 STORAGE 1RM 106 EAST
1/4" = 1'-0"

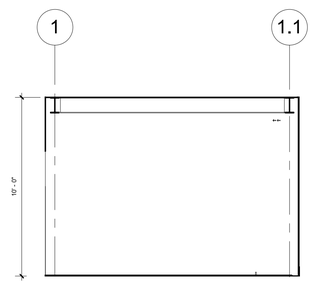

1 A502 STORAGE 1 RM 106 NORTH
1/4" = 1'-0"

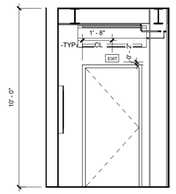

8 A502 COMM RM 107 WEST
1/4" = 1'-0"

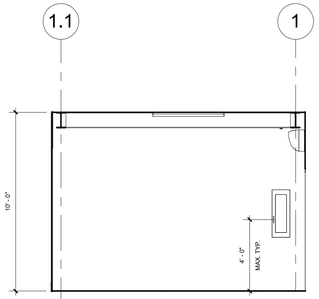

7 A502 COMM RM 107 SOUTH
1/4" = 1'-0"

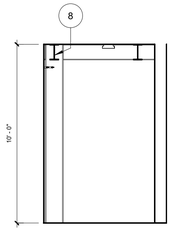

6 A502 COMM RM 107 EAST
1/4" = 1'-0"

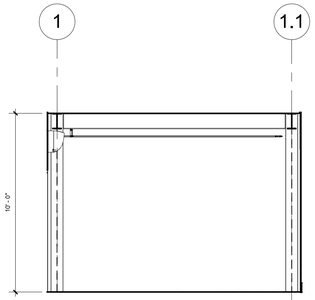

5 A502 COMM RM 107 NORTH
1/4" = 1'-0"

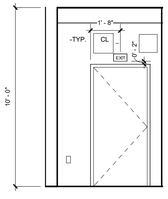

12 A502 BATTERY STORAGE 108 WEST
1/4" = 1'-0"

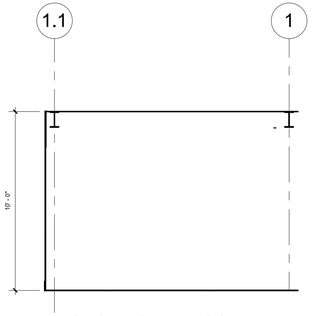

11 A502 BATTERY STORAGE 108 SOUTH
1/4" = 1'-0"

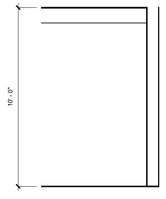

10 A502 BATTERY STORAGE 108 EAST
1/4" = 1'-0"

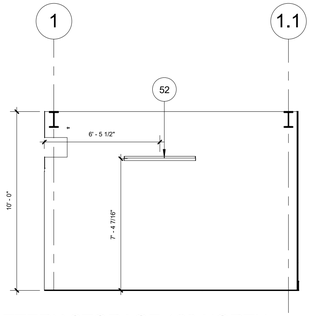

9 A502 BATTERY STORAGE 108 NORTH
1/4" = 1'-0"

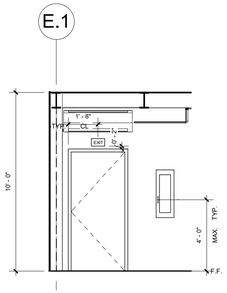

16 A502 ELEC RM 109 WEST
1/4" = 1'-0"

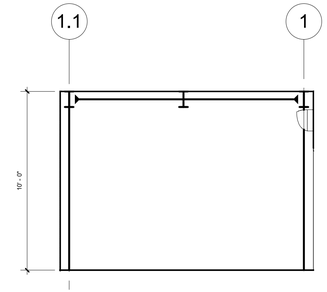

15 A502 ELEC RM 109 SOUTH
1/4" = 1'-0"

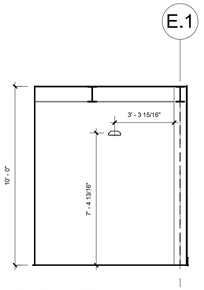

14 A502 ELEC RM 109 EAST
1/4" = 1'-0"

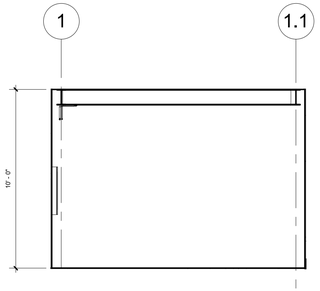

13 A502 ELEC RM 109 NORTH
1/4" = 1'-0"

INTERIOR KEYNOTES

3	CONTINUOUS PAINTED CEMENT BOARD
8	STRUCTURAL MEMBER PER STRUCTURAL DWGS.
51	FIRE EXTINGUISHER.
52	LIGHT FIXTURE. ALIGN ALL LIGHT FIXTURES WITHIN THE SAME ROOM. SEE ELECTRICAL.
54	GYP BD, PNT.

GENERAL NOTES:

1. ALL EXPOSED STRUCTURAL CONNECTIONS TO HAVE ARCHITECTURAL FINISH & PAINT COLORS TO MATCH ADJACENT SURFACES. SEE FINISH SCHEDULE FOR LOCATION OF INTUMESCENT PAINT.

BUREAU OF ENGINEERING
OFFICIAL RECORD

THE CITY OF LOS ANGELES OR ITS OFFICERS OR AGENTS SHALL NOT BE RESPONSIBLE FOR THE ACCURACY OR COMPLETENESS OF ELECTRONIC COPIES OF THIS PLAN SHEET.

FILE PATH: A360://Studio City Recreation Center/SCRC-Project Model_Central_Final.rvt

SHEET ISSUE DATE: 05/30/17

REVISION DATES (DESIGN STAGE ONLY)

ENGINEERING
CITY OF LOS ANGELES

BUREAU OF ENGINEERING

NO.	REVISION DESCRIPTION	DATE	BY

BUILDING NO. -

INDEX NO. RP-300106

LICENSED ARCHITECT LOMELIN C-23333 REGISTRATION STATE OF CALIFORNIA

DEPARTMENT OF PUBLIC WORKS

CITY ENGINEER	DATE:
TED ALLEN, PE	
ARCHITECTURAL DIVISION	
ARCHITECT: ROBERT LOMELIN	LIC. NO.: C 23333
DESIGNED BY: Z. AKHTER, M. CHAVARRIA, A. KIM, M. LAM	1-24-2019
DRAWN BY: Z. AKHTER, M. CHAVARRIA, A. KIM	1-24-2019
CHECKED BY: ROBERT LOMELIN	1-24-2019
APPROVED BY:MAHMOOD KARIMZADEH,AIA, DEPUTY CITY ENGINEER	1-24-2019

CITY OF LOS ANGELES

CLIENT: DEPARTMENT OF RECREATION AND PARKS
GENERAL MANAGER: MICHAEL A. SHULL

SHEET TITLE: INTERIOR ELEVATIONS

PROJECT: STUDIO CITY RECREATION CENTER

ADDRESS: 12621 RYE STREET, STUDIO CITY, CA 91604

WORK ORDER NO. E170267B

PLAN FILE NO. 860

DRAWING NO. A507

SHEET 81 OF SHEETS 211

PLOTTED:7/1/2019 11:29:41 AM

2 A101 COMMUNITY RM 200 EAST
1/4" = 1'-0"

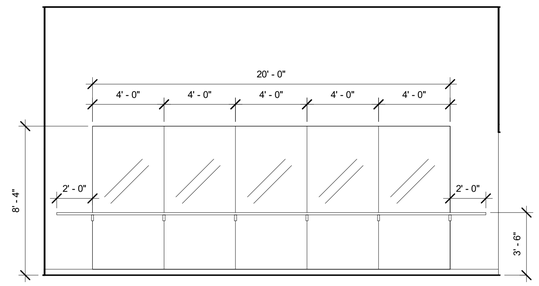

1 A101 COMMUNITY RM 200 NORTH
1/4" = 1'-0"

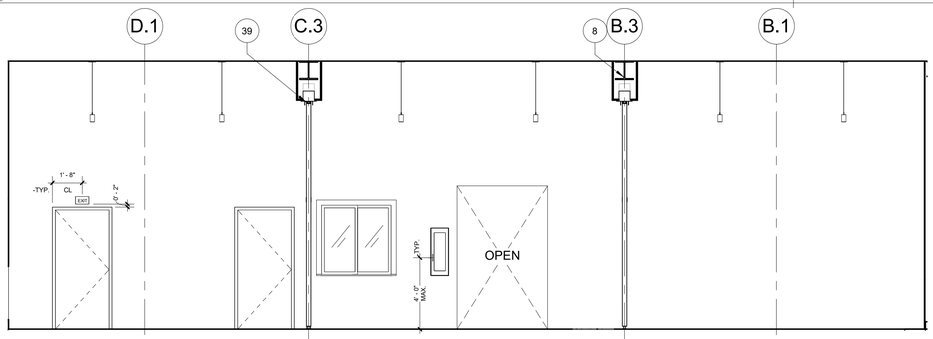

4 A101 COMMUNITY RM 200 WEST
1/4" = 1'-0"

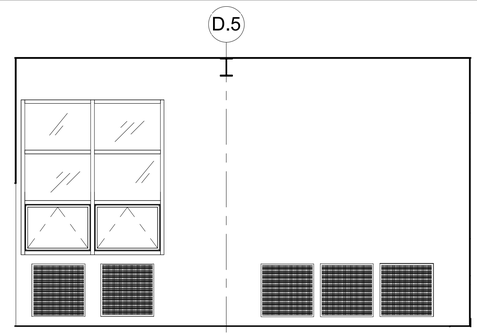

3 A101 COMMUNITY RM 200 SOUTH
1/4" = 1'-0"

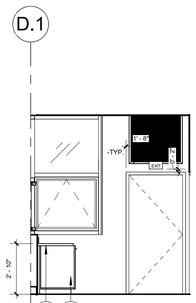

8 A501 BREAK ROOM 201 - WEST
1/4" = 1'-0"

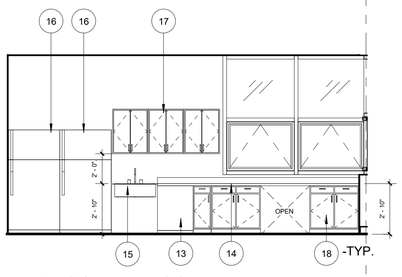

7 A501 BREAK ROOM 201 - SOUTH
1/4" = 1'-0"

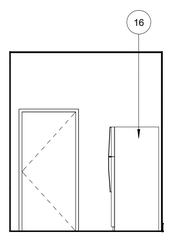

6 A501 BREAK ROOM 201 - EAST
1/4" = 1'-0"

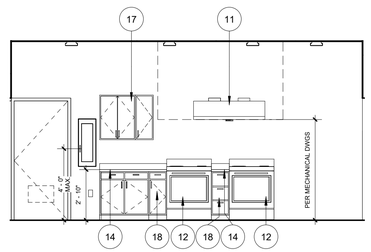

5 A501 BREAK ROOM 201 - NORTH
1/4" = 1'-0"

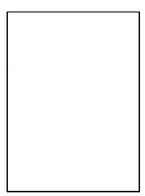

12 A501 PANTRY 202 WEST
1/4" = 1'-0"

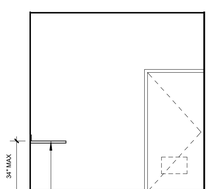

11 A501 PANTRY 202 SOUTH
1/4" = 1'-0"

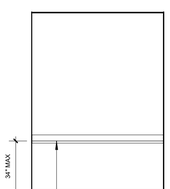

10 A501 PANTRY 202 EAST
1/4" = 1'-0"

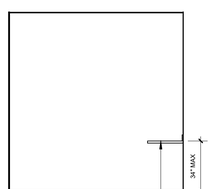

9 A501 PANTRY 202 NORTH
1/4" = 1'-0"

INTERIOR KEYNOTES

8	STRUCTURAL MEMBER PER STRUCTURAL DWGS.
9	WALL MIRROR
10	RETRACTABLE FOLDING DOOR
11	RANGE HOOD. S.M.D. FOR MORE INFO.
12	ELECTRIC RANGE
13	DISHWASHER
14	QUARTZ COUNTERTOP. SUBMIT FINISH OPTION FOR ARCHITECTS SELECTION.
15	STAINLESS STEEL SINK, SEE DETAIL 7/A626
16	REFRIGERATOR
17	WALL MOUNTED CABINETS
18	CABINETS.SEE SHEET A626.
19	NATURAL VENTILATION SYSTEM WITH INSULATION. SEE MECHANICAL DWGS FOR SIZE. INTERIOR COLOR TO MATCH ADJACENT SURFACES. SEE 1/A641 FOR ATTACHMENT DETAIL.
39	CONTINOUSLY HINGED ELECTRIC ROOM DIVIDER
46	WALL MOUNT BALLET BARRE SYSTEM W/ BRACKET MOUNT PLATES
51	FIRE EXTINGUISHER.
54	GYP BD, PNT.

GENERAL NOTES:

1. ALL EXPOSED STRUCTURAL CONNECTIONS TO HAVE ARCHITECTURAL FINISH & PAINT COLORS TO MATCH ADJACENT SURFACES. SEE FINISH SCHEDULE FOR LOCATION OF INTUMESCENT PAINT.

BUREAU OF ENGINEERING
OFFICIAL RECORD

ENGINEERING
CITY OF LOS ANGELES

BUREAU OF ENGINEERING
DEPARTMENT OF PUBLIC WORKS
CITY OF LOS ANGELES

NO.	REVISION DESCRIPTION	DATE	BY

BUILDING NO. -
INDEX NO. RP-300106

LICENSED ARCHITECT TED ALLEN LIC. NO. C 23333 REGISTRATION STATE OF CALIFORNIA

CITY ENGINEER DATE:
TED ALLEN, PE 1-24-2019
ARCHITECTURAL DIVISION
ARCHITECT: ROBERT LOMELIN LIC. NO.: C 23333 1-24-2019
DESIGNED BY: Z. AKHTER, M. CHAVARRIA, A. KIM, M. LAM 1-24-2019
DRAWN BY: Z. AKHTER, M. CHAVARRIA, A. KIM 1-24-2019
CHECKED BY: ROBERT LOMELIN 1-24-2019
APPROVED BY:MAHMOOD KARIMZADEH,AIA, DEPUTY CITY ENGINEER 1-24-2019

CLIENT: DEPARTMENT OF RECREATION AND PARKS
GENERAL MANAGER: MICHAEL A. SHULL
SHEET TITLE: INTERIOR ELEVATIONS
PROJECT: STUDIO CITY RECREATION CENTER
ADDRESS: 12621 RYE STREET, STUDIO CITY, CA 91604

WORK ORDER NO. E170267B
PLAN FILE NO. 860
DRAWING NO. A508
SHEET 82 OF SHEETS 211

PLOTTED:7/1/2019 11:29:53 AM

THE CITY OF LOS ANGELES OR ITS OFFICERS OR AGENTS SHALL NOT BE RESPONSIBLE FOR THE ACCURACY OR COMPLETENESS OF ELECTRONIC COPIES OF THIS PLAN SHEET.

FILE PATH: A360://Studio City Recreation Center/SCRC-Project Model_Central_Final.rvt

SHEET ISSUE DATE: 10/10/17

REVISION DATES (DESIGN STAGE ONLY)

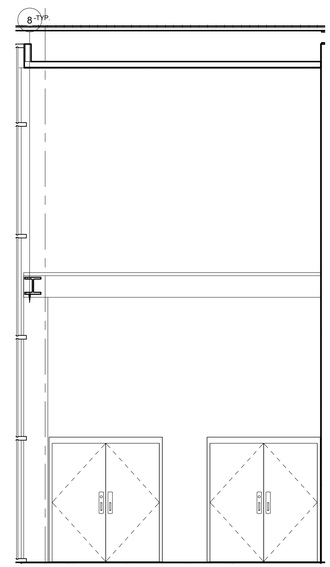

4 A502 LOBBY 100 WEST
1/4" = 1'-0"

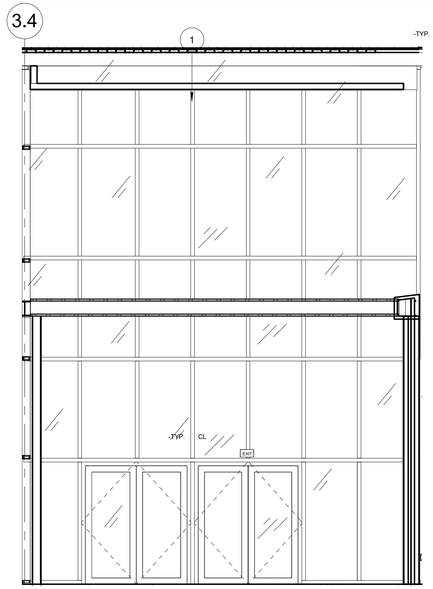

3 A502 LOBBY 100 SOUTH
1/4" = 1'-0"

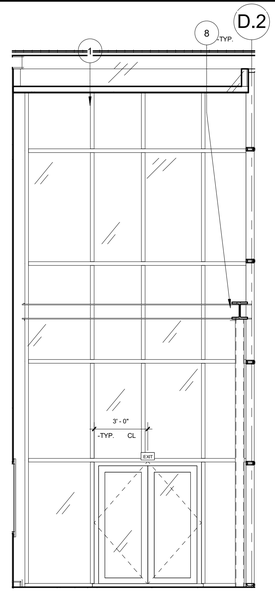

2 A502 LOBBY 100 EAST
1/4" = 1'-0"

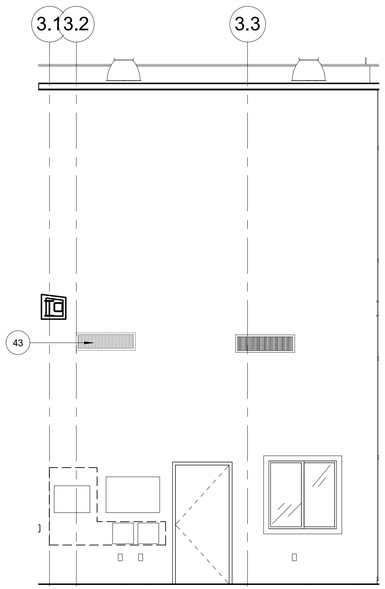

1 A502 LOBBY 100 NORTH
1/4" = 1'-0"

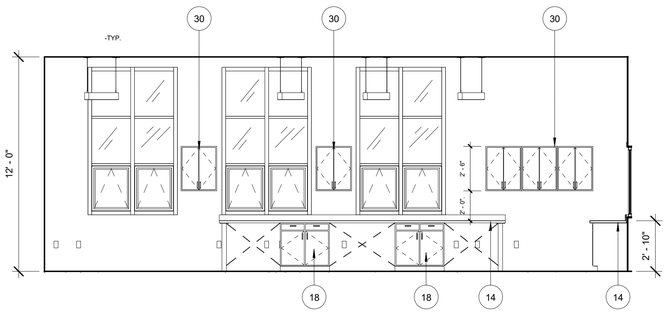

6 A502 OFFICE 101 EAST
1/4" = 1'-0"

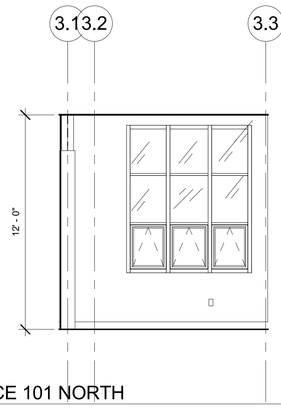

5 A502 OFFICE 101 NORTH
1/4" = 1'-0"

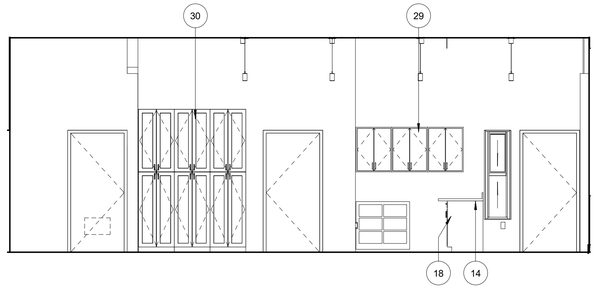

8 A502 OFFICE 101 WEST
1/4" = 1'-0"

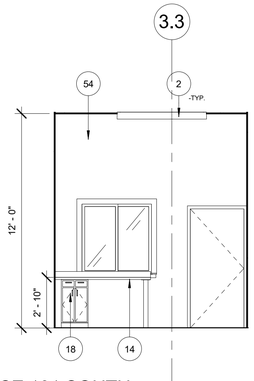

7 A502 OFFICE 101 SOUTH
1/4" = 1'-0"

INTERIOR KEYNOTES

1	CURTAIN GLASS WALL SYSTEM
2	LIGHT FIXTURE. SEE REFELCTED CEILING PLAN OF LAYOUT FOR ALL CEILING MOUNTED FIXTURES.
8	STRUCTURAL MEMBER PER STRUCTURAL DWGS.
14	QUARTZ COUNTERTOP. SUBMIT FINISH OPTION FOR ARCHITECTS SELECTION.
18	CABINETS.SEE SHEET A626.
29	WALL HUNG CABINET. SEE DETAIL 2/A626
30	TALL CABINET W/ DOUBLE DOOR
43	RETURN AIR GRILL, COLOR TO MATCH ADJACENT SURFACES. SEE MECHANICAL DWGS
48	DESIGNATED AREA FOR BUILDING PLAQUE. LEED PLAQUE, NET ZERO ENERGY PLAQUE & EDUCATIONAL SIGNAGE. PROVIDE SUPPORT PER STRUCTURAL DWG.
49	LED TV SCREEN PER MECHANICAL.
54	GYP BD, PNT.

GENERAL NOTES:

1. ALL EXPOSED STRUCTURAL CONNECTIONS TO HAVE ARCHITECTURAL FINISH & PAINT COLORS TO MATCH ADJACENT SURFACES. SEE FINISH SCHEDULE FOR LOCATION OF INTUMESCENT PAINT.

BUREAU OF ENGINEERING
OFFICIAL RECORD

THE CITY OF LOS ANGELES OR ITS OFFICERS OR AGENTS SHALL NOT BE RESPONSIBLE FOR THE ACCURACY OR COMPLETENESS OF ELECTRONIC COPIES OF THIS PLAN SHEET.

FILE PATH: A360://Studio City Recreation Center/SCRC-Project Model_Central_Final.rvt

SHEET ISSUE DATE: 04/26/17

REVISION DATES: (DESIGN STAGE ONLY)

CITY OF LOS ANGELES
DEPARTMENT OF PUBLIC WORKS
BUREAU OF ENGINEERING

ENGINEERING
CITY OF LOS ANGELES

NO.	REVISION DESCRIPTION	DATE	BY

BUILDING NO. -

INDEX NO. RP-300106

LICENSED ARCHITECT LOMELIN TEXAS LIC. NO. 23333 REGISTERED STATE OF CALIFORNIA

TED ALLEN, PE CITY ENGINEER

		DATE:
ARCHITECTURAL DIVISION		
ARCHITECT: ROBERT LOMELIN	LIC. NO.: C 23333	1-24-2019
DESIGNED BY:	Z. AKHTER, M. CHAVARRIA, A. KIM, M. LAM	1-24-2019
DRAWN BY:	Z. AKHTER, M. CHAVARRIA, A. KIM	1-24-2019
CHECKED BY:	ROBERT LOMELIN	1-24-2019
APPROVED BY:	MAHMOOD KARIMZADEH,AIA, DEPUTY CITY ENGINEER	1-24-2019

CLIENT: DEPARTMENT OF RECREATION AND PARKS
GENERAL MANAGER: MICHAEL A. SHULL

SHEET TITLE: INTERIOR ELEVATIONS

PROJECT: STUDIO CITY RECREATION CENTER

ADDRESS: 12621 RYE STREET, STUDIO CITY, CA 91604

WORK ORDER NO. E170267B

PLAN FILE NO. 860

DRAWING NO. A509

SHEET 83 OF SHEETS 211

PLOTTED:7/1/2019 11:30:08 AM

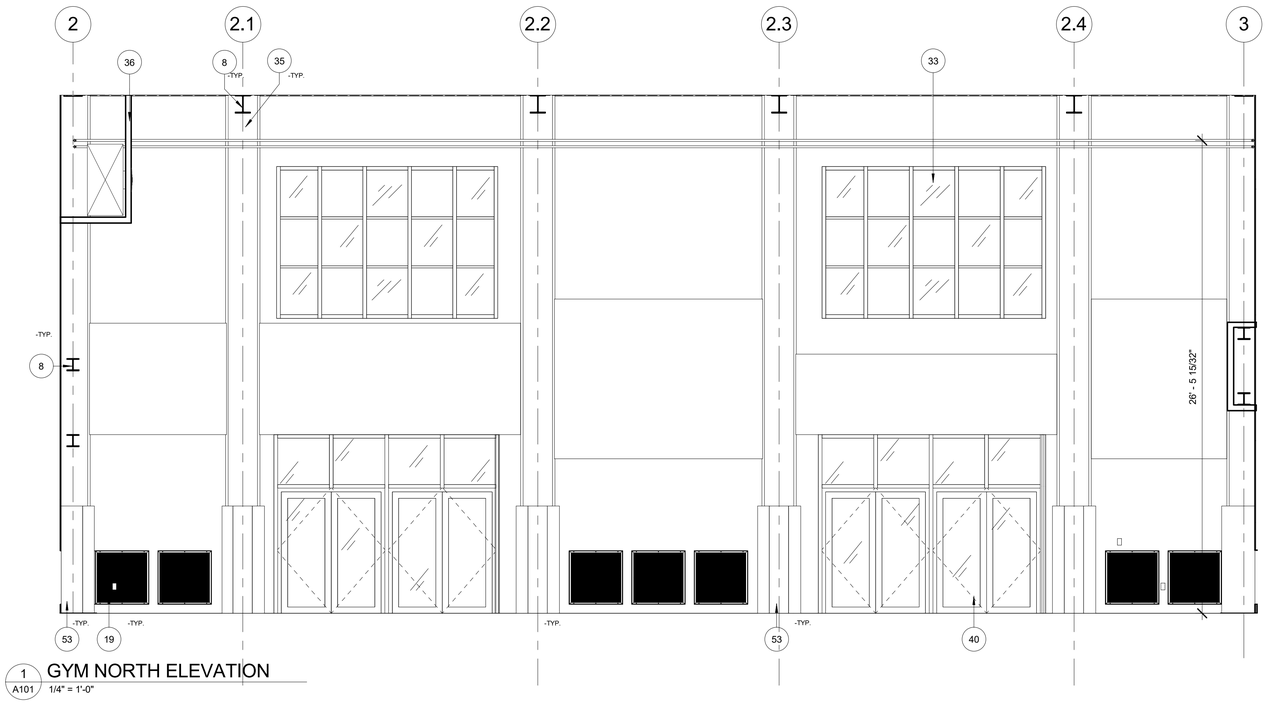

1 A101 GYM NORTH ELEVATION
1/4" = 1'-0"

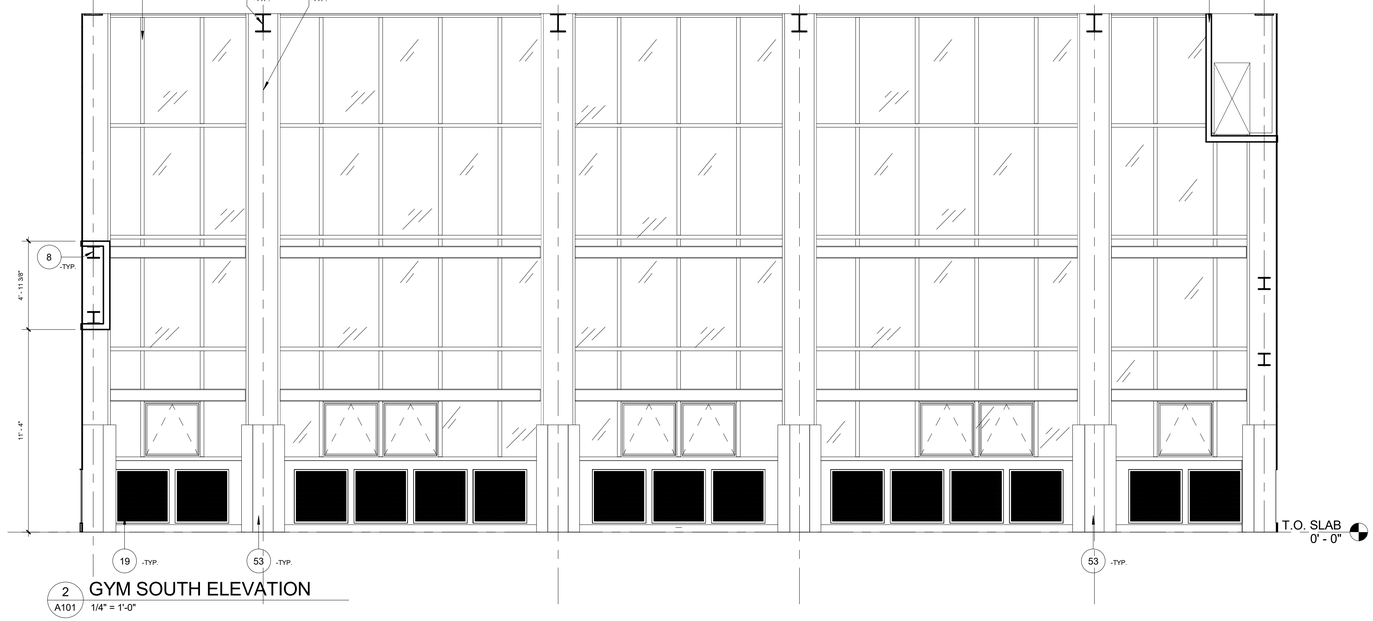

2 A101 GYM SOUTH ELEVATION
1/4" = 1'-0"

INTERIOR KEYNOTES

1	CURTAIN GLASS WALL SYSTEM
8	STRUCTURAL MEMBER PER STRUCTURAL DWGS.
19	NATURAL VENTILATION SYSTEM WITH INSULATION. SEE MECHANICAL DWGS FOR SIZE. INTERIOR COLOR TO MATCH ADJACENT SURFACES. SEE 1/A641 FOR ATTACHMENT DETAIL.
33	CLERESTORY SYSTEM
35	STRUCTURAL COLUMN, PROVIDE 6' HIGH PADDING SUBMIT PADDING FINISH AND COLOR OPTION
36	DUCT CHASE
40	STOREFRONT SYSTEM
53	COLUMN PADDING PER DETAIL 1/A621. SUBMIT COLOR OPTIONS FOR ARCHITECTS SELECTION.

GENERAL NOTES:

1. ALL EXPOSED STRUCTURAL CONNECTIONS TO HAVE ARCHITECTURAL FINISH & PAINT COLORS TO MATCH ADJACENT SURFACES. SEE FINISH SCHEDULE FOR LOCATION OF INTUMESCENT PAINT.

BUREAU OF ENGINEERING
OFFICIAL RECORD

THE CITY OF LOS ANGELES OR ITS OFFICERS OR AGENTS SHALL NOT BE RESPONSIBLE FOR THE ACCURACY OR COMPLETENESS OF ELECTRONIC COPIES OF THIS PLAN SHEET.

FILE PATH: A360://Studio City Recreation Center/SCRC-Project Model_Central_Final.rvt

SHEET ISSUE DATE: 11/08/17

REVISION DATES (DESIGN STAGE ONLY)

ENGINEERING
CITY OF LOS ANGELES

DEPARTMENT OF PUBLIC WORKS
BUREAU OF ENGINEERING

NO.	REVISION DESCRIPTION	DATE	BY

BUILDING NO. -

INDEX NO. RP-300106

LICENSED ARCHITECT LOMELIN C 23333 REGISTERED STATE OF CALIFORNIA

CITY OF LOS ANGELES

CITY ENGINEER		DATE:	
TED ALLEN, PE		1-24-2019	
ARCHITECTURAL DIVISION		1-24-2019	
ARCHITECT: ROBERT LOMELIN	LIC. NO.: C 23333	1-24-2019	
DESIGNED BY: Z. AKHTER, M. CHAVARRIA, A. KIM, M. LAM		1-24-2019	
DRAWN BY: Z. AKHTER, M. CHAVARRIA, A. KIM		1-24-2019	
CHECKED BY: ROBERT LOMELIN		1-24-2019	
APPROVED BY:MAHMOOD KARIMZADEH,AIA, DEPUTY CITY ENGINEER		1-24-2019	

CLIENT: DEPARTMENT OF RECREATION AND PARKS
GENERAL MANAGER: MICHAEL A. SHULL

SHEET TITLE: INTERIOR ELEVATIONS

PROJECT: STUDIO CITY RECREATION CENTER

ADDRESS: 12621 RYE STREET, STUDIO CITY, CA 91604

WORK ORDER NO. E170267B

PLAN FILE NO. 860

DRAWING NO. A510

SHEET 84 OF SHEETS 211

PLOTTED:7/1/2019 11:30:39 AM

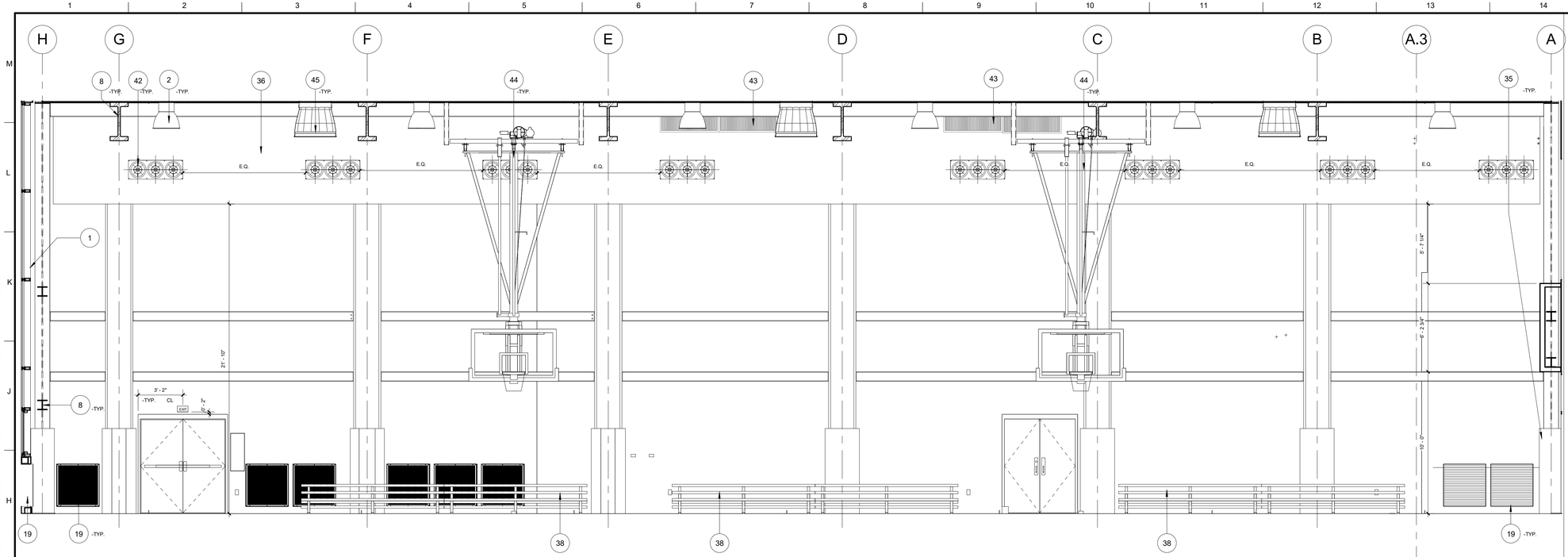

1 A101 GYM WEST ELEVATION

1/4" = 1'-0"

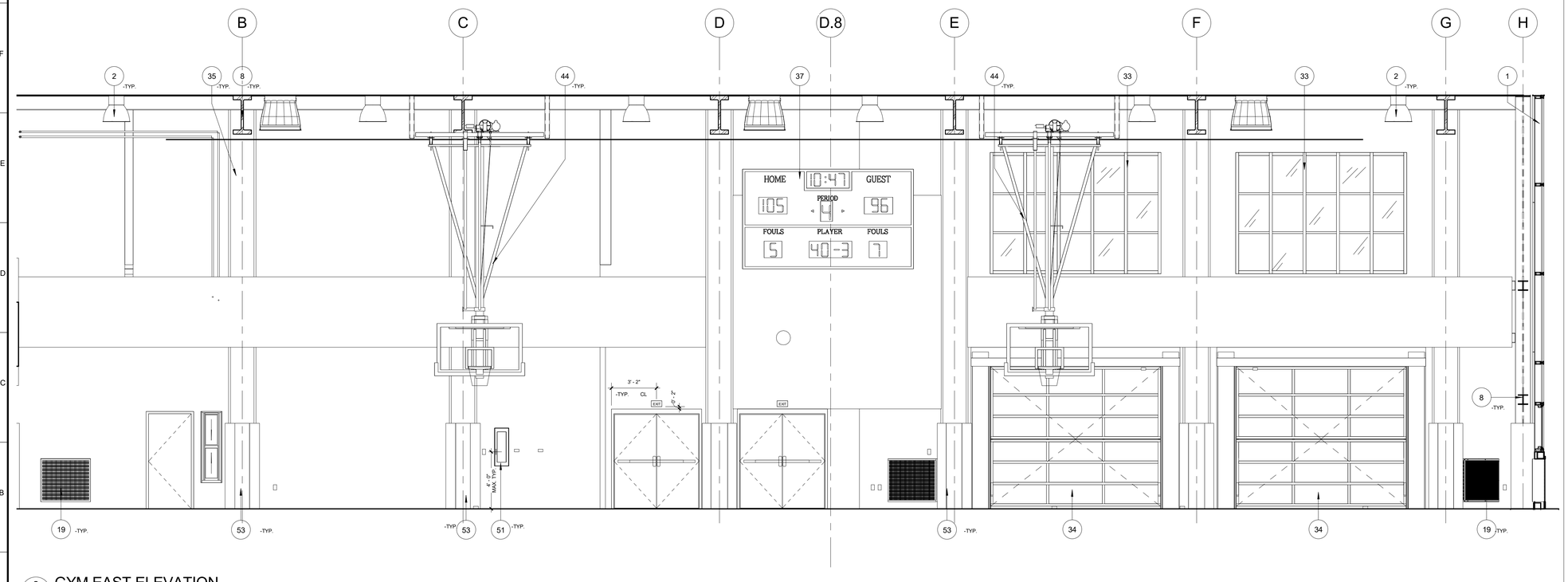

2 A101 GYM EAST ELEVATION

1/4" = 1'-0"

INTERIOR KEYNOTES

1	CURTAIN GLASS WALL SYSTEM
2	LIGHT FIXTURE. SEE REFELCTED CEILING PLAN OF LAYOUT FOR ALL CEILING MOUNTED FIXTURES.
8	STRUCTURAL MEMBER PER STRUCTURAL DWGS.
19	NATURAL VENTILATION SYSTEM WITH INSULATION. SEE MECHANICAL DWGS FOR SIZE. INTERIOR COLOR TO MATCH ADJACENT SURFACES. SEE 1/A641 FOR ATTACHMENT DETAIL.
33	CLERESTORY SYSTEM
34	OVERHEAD FOLD GLAZED DOOR
35	STRUCTURAL COLUMN, PROVIDE 6' HIGH PADDING SUBMIT PADDING FINISH AND COLOR OPTION
36	DUCT CHASE
37	BASKETBALL SCORE BOARD. SEE STRUCTURAL DWGS FOR DETAIL.
38	BLEACHER SEATING. SUMBIT COLOR & FINISH OPTION.
42	DIFFUSERS, COLOR TO MATCH ADJACENT SURFACES. SEE MECHANICAL DWGS.
43	RETURN AIR GRILL, COLOR TO MATCH ADJACENT SURFACES. SEE MECHANICAL DWGS
44	CEILING MOUNTED BASKETBALL BACKSTOP. SEE STUCTURAL DWGS FOR CONNECTION DETAIL.
45	SOLATUBE
51	FIRE EXTINGUISHER.
53	COLUMN PADDING PER DETAIL 1/A621. SUBMIT COLOR OPTIONS FOR ARCHITECTS SELECTION.

GENERAL NOTES:

1. ALL EXPOSED STRUCTURAL CONNECTIONS TO HAVE ARCHITECTURAL FINISH & PAINT COLORS TO MATCH ADJACENT SURFACES. SEE FINISH SCHEDULE FOR LOCATION OF INTUMESCENT PAINT.

BUREAU OF ENGINEERING OFFICIAL RECORD

THE CITY OF LOS ANGELES OR ITS OFFICERS OR AGENTS SHALL NOT BE RESPONSIBLE FOR THE ACCURACY OR COMPLETENESS OF ELECTRONIC COPIES OF THIS PLAN SHEET.

FILE PATH: A360://Studio City Recreation Center/SCRC-Project Model_Central_Final.rvt

SHEET ISSUE DATE: 11/08/17

REVISION DATES (DESIGN STAGE ONLY)

ENGINEERING
CITY OF LOS ANGELES

BUREAU OF ENGINEERING

NO.	REVISION DESCRIPTION	DATE	BY

BUILDING NO. -

INDEX NO. **RP-300106**

LICENSED ARCHITECT TED ALLEN LIC. NO. C 23333 RENEWAL 08/31/2020 STATE OF CALIFORNIA

DEPARTMENT OF PUBLIC WORKS

CITY OF LOS ANGELES

CITY ENGINEER:	
DATE:	1-24-2019
ARCHITECTURAL DIVISION	1-24-2019
ARCHITECT: ROBERT LOMELIN LIC. NO.: C 23333	1-24-2019
DESIGNED BY: Z. AKHTER, M. CHAVARRIA, A. KIM, M. LAM	1-24-2019
DRAWN BY: Z. AKHTER, M. CHAVARRIA, A KIM	1-24-2019
CHECKED BY: ROBERT LOMELIN	1-24-2019
APPROVED BY: MAHMOOD KARIMZADEH, AIA, DEPUTY CITY ENGINEER	1-24-2019

TED ALLEN, PE

CLIENT: DEPARTMENT OF RECREATION AND PARKS
GENERAL MANAGER: MICHAEL A. SHULL

SHEET TITLE: INTERIOR ELEVATIONS

PROJECT: STUDIO CITY RECREATION CENTER

ADDRESS: 12621 RYE STREET, STUDIO CITY, CA 91604

WORK ORDER NO. E170267B

PLAN FILE NO. 860

DRAWING NO. A511

SHEET 85 OF SHEETS 211

PLOTTED:7/1/2019 11:31:06 AM

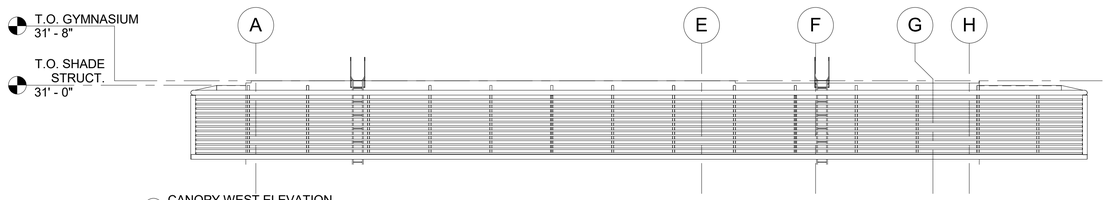

2 CANOPY WEST ELEVATION
3/32" = 1'-0"

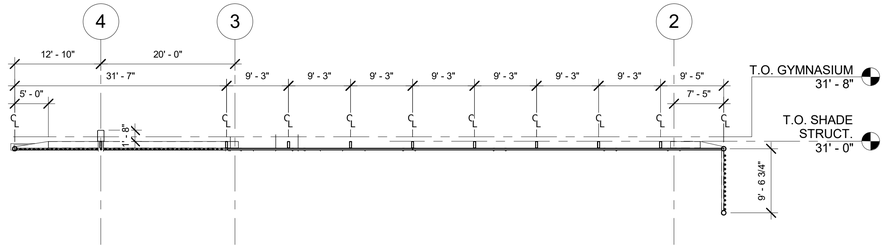

3 CANOPY NORTH ELEVATION
3/32" = 1'-0"

OPEN
PASSAGEWAY

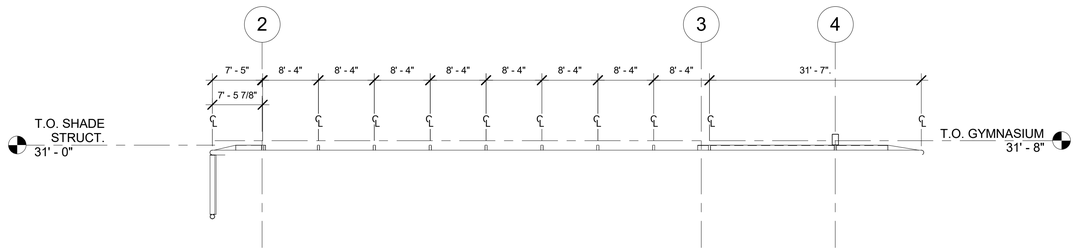

5 CANOPY SOUTH ELEVATION
3/32" = 1'-0"

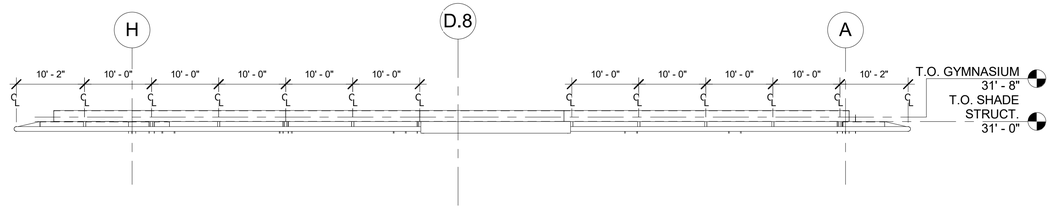

4 CANOPY EAST ELEVATION
3/32" = 1'-0"

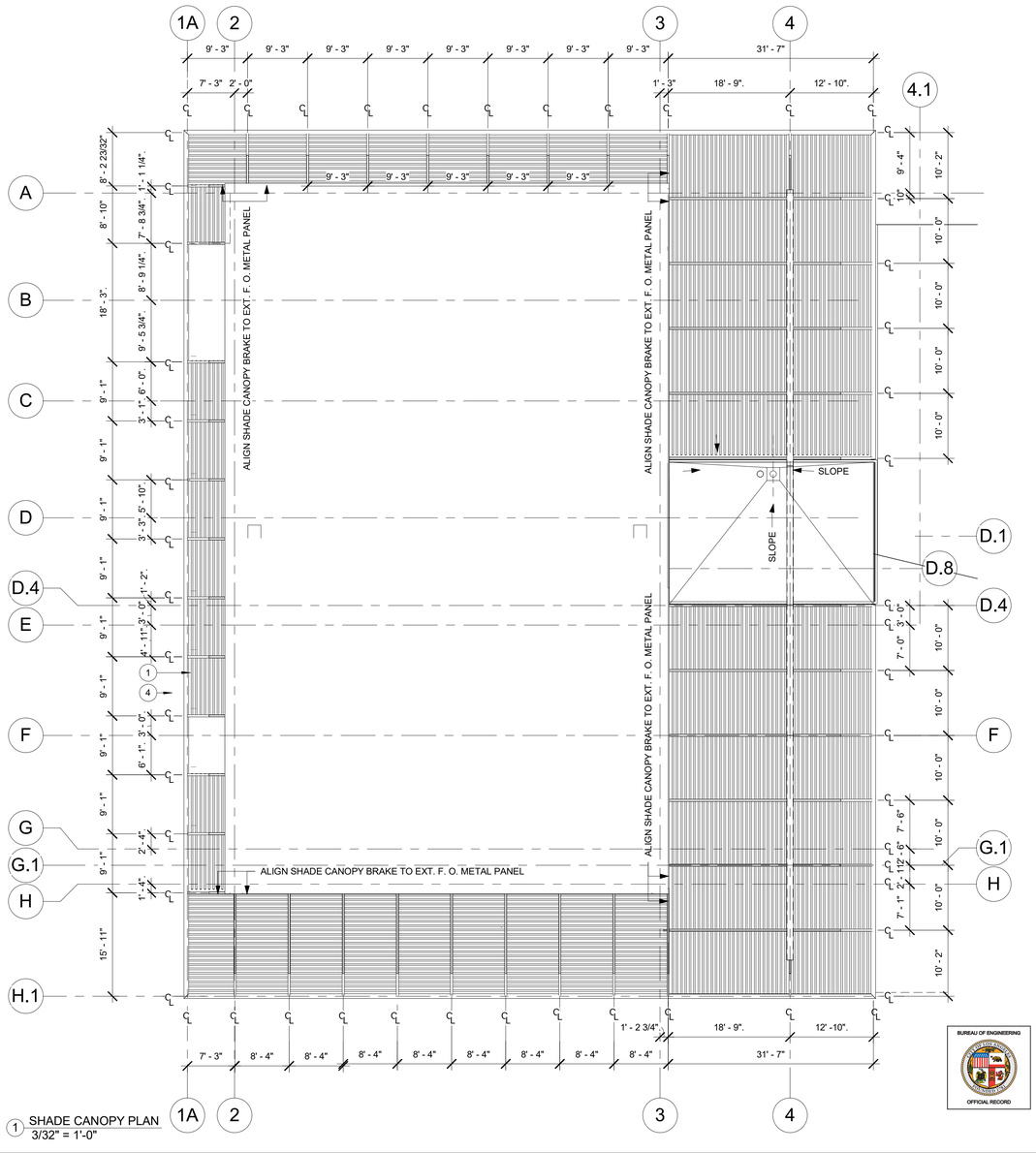

1 SHADE CANOPY PLAN
3/32" = 1'-0"

BUREAU OF ENGINEERING
OFFICIAL RECORD

THE CITY OF LOS ANGELES OR ITS OFFICERS OR AGENTS SHALL NOT BE RESPONSIBLE FOR THE ACCURACY OR COMPLETENESS OF ELECTRONIC COPIES OF THIS PLAN SHEET.

FILE PATH: A360://Studio City Recreation Center/SCRC-Project Model_Central_Final.rvt

SHEET ISSUE DATE: 08/02/18

REVISION DATES
(DESIGN STAGE ONLY)

CITY OF LOS ANGELES
DEPARTMENT OF PUBLIC WORKS
BUREAU OF ENGINEERING

ENGINEERING
CITY OF LOS ANGELES

NO.	REVISION DESCRIPTION	DATE	BY

BUILDING NO. -

INDEX NO. **RP-300106**

LICENSED ARCHITECT · LOMELIN · CALIFORNIA · LIC. NO. C 23333 · REGISTERED · STATE OF CALIFORNIA

CITY ENGINEER	DATE:
TED ALLEN, PE	
ARCHITECTURAL DIVISION	
ARCHITECT: ROBERT LOMELIN	LIC. NO.: C 23333
DESIGNED BY: Z. AKHTER, M. CHAVARRIA, A. KIM, M. LAM	1-24-2019
DRAWN BY: Z. AKHTER, M. CHAVARRIA, A. KIM	1-24-2019
CHECKED BY: ROBERT LOMELIN	1-24-2019
APPROVED BY:MAHMOOD KARIMZADEH,AIA, DEPUTY CITY ENGINEER	1-24-2019

CLIENT: DEPARTMENT OF RECREATION AND PARKS

GENERAL MANAGER: MICHAEL A. SHULL

SHEET TITLE: SHADE CANOPY PLAN & ELEVATIONS

PROJECT: STUDIO CITY RECREATION CENTER

ADDRESS: 12621 RYE STREET, STUDIO CITY, CA 91604

WORK ORDER NO. E170267B

PLAN FILE NO. 860

DRAWING NO. **A512**

SHEET 86 OF SHEETS 211

PLOTTED:7/1/2019 11:31:17 AM

WALL TYPE "H "

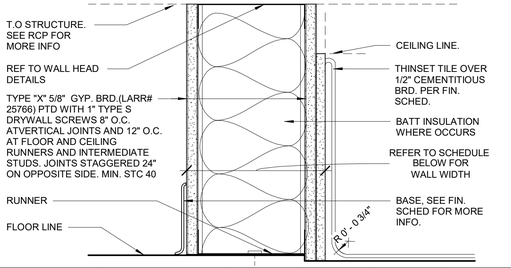

FLOOR PLAN TAG **PROVIDE** SOUND ATTENUATION	WALL **R-VALUE**	STUD SIZE	WALL WIDTH	FIRE RATING	UL LISTING
H	R-VALUE	6"	7 1/4"	NON-RATED	N/A
H.1	R-VALUE	6"	7 1/4"	1 HR.	N/A

WALL TYPE "E"

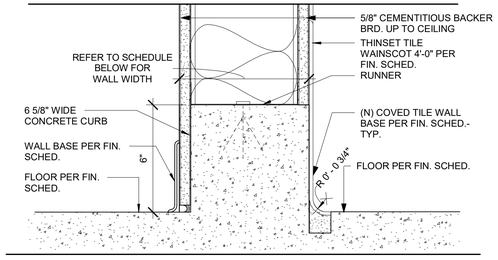

FLOOR PLAN TAG **PROVIDE** SOUND ATTENUATION	WALL **R-VALUE**	STUD SIZE	WALL WIDTH	FIRE RATING	UL LISTING
I	R-VALUE	6"	7 1/4"	NON-RATED	N/A

WALL TYPE "B"

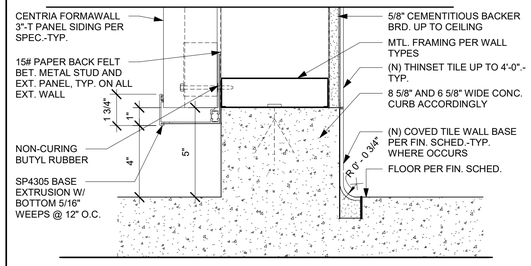

FLOOR PLAN TAG **PROVIDE** SOUND ATTENUATION	WALL **R-VALUE**	STUD SIZE	PARTITION WIDTH	FIRE RATING	UL LISTING
B	R-VALUE	8"	11 5/8"	NON-RATED	N/A
B1	R-VALUE	6"	9 5/8"	NON-RATED	N/A

WALL TYPE "A"

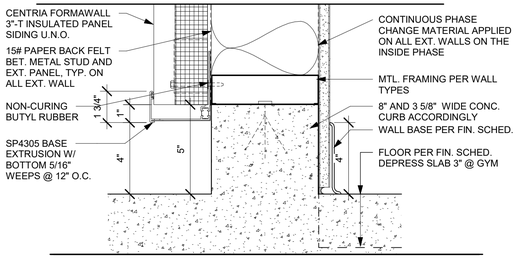

FLOOR PLAN TAG **PROVIDE** SOUND ATTENUATION	WALL **R-VALUE**	STUD SIZE	PARTITION WIDTH	FIRE RATING	UL LISTING
A	MIN. R-25	8"	11 5/8"	NON-RATED	N/A
A1	MIN. R-25	3 5/8"	7 1/4"	NON-RATED	N/A

WALL TYPE "J"

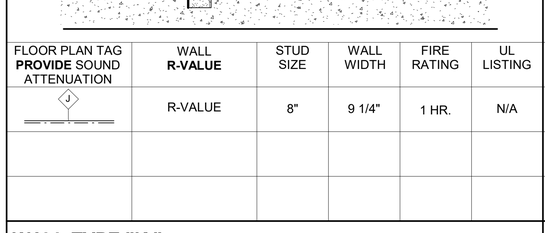

FLOOR PLAN TAG **PROVIDE** SOUND ATTENUATION	WALL **R-VALUE**	STUD SIZE	WALL WIDTH	FIRE RATING	UL LISTING
J	R-VALUE	8"	9 1/4"	1 HR.	N/A

WALL TYPE "F"

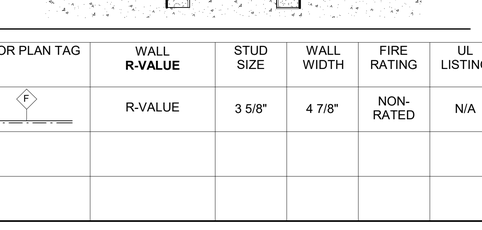

FLOOR PLAN TAG	WALL **R-VALUE**	STUD SIZE	WALL WIDTH	FIRE RATING	UL LISTING
F	R-VALUE	3 5/8"	4 7/8"	NON-RATED	N/A

WALL TYPE "C "

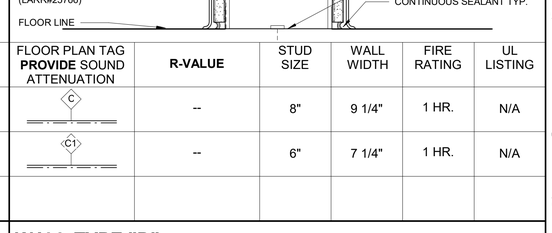

FLOOR PLAN TAG **PROVIDE** SOUND ATTENUATION	**R-VALUE**	STUD SIZE	WALL WIDTH	FIRE RATING	UL LISTING
C	--	8"	9 1/4"	1 HR.	N/A
C1	--	6"	7 1/4"	1 HR.	N/A

WALL TYPE GENERAL NOTES

1. WALLS ARE TAGGED ON FLOOR PLANS. REFER TO FLOOR PLANS FOR WALL TYPE IDENTIFICATION.
2. WALL TYPE TAGS ARE USED TO IDENTIFY CONTIGUOUS PARTITION SEGMENTS. IF A CONTIGUOUS PARTITION SEGMENT IS NOT TAGGED, PARTITION TYPE "A" SHALL BE ASSUMED.
3. WALL TAGS USE A TWO-PART, ALPHA-NUMERIC DESIGNATION: THE FIRST CHARACTER IS A LETTER INDICATING THE PARTITION TYPE. THE SECOND CHARACTER IS A NUMBER INIDCATING THE WIDTH OF THE STUD OR CMU BLOCK.
4. SEALANT:
   1. USE OF SEALANT FOR FIRE RESISTANCE RATED PARTITIONS SHALL COMPLY WITH REQUIREMENTS OF THE FIRE STOPPING SYSTEM MANUFACTURER AND SHALL BE UL LISTED OR APPROVED IN THE PARTITION UL LISTING.
   2. NON-RATED PARTITIONS SHALL USE ACOUSTICAL SEALANT.
5. INSULATION AS REQUIRED BY UL LISTING OR PARTITION TAG:
   1. USE OF INSULATION FOR FIRE RESISTANCE RATED PARTITIONS SHALL COMPLY WITH THE PARTITION UL LISTING. INSULATION TYPE SHALL BE MINERAL WOOL.
   2. INSULATION TYPE FOR NON-RATED PARTITIONS SHALL BE SOUND ATTENUATION BLANKETS.
   3. PROVIDE FULL THICKNESS INSULATION INSIDE ALL STUD BOX BEAMS AND HEADERS WITHIN PARTITIONS REQUIRING SOUND ATTENUATION.
6. REFER TO METAL STUD MANUFACTURER'S DATA FOR MINIMUM STUD THICKNESS, MAXIMUM SPACING AND ALLOWABLE LIMITING HEIGHTS DEFLECTION CRITERIA FOR GYPSUM BOARD ASSEMBLIES. CONFIRM SEISMIC REQUIREMENTS WITH MANUFACTURER.
7. IF METAL STUD MANUFACTURER DOES NOT PROVIDE LOAD TABLES FOR APPLICATIONS SHOWN IN THESE DOCUMENTS, THE APPLICATION SHALL BE DESIGNED BY DELEGATED ENGINEERS AND SUBMITTED FOR REVIEW.
8. CONSULT WITH OWNER ON REQUIREMENTS FOR LABELING FIRE AND SMOKE RESISTANT RATED PARTITIONS.
9. REFERENCE STRUCTURAL DRAWINGS FOR ADDITIONAL INFORMATION.
10. MINIMUM STC 40 ON ALL DEMISING WALLS. (GA FILE NO. WP 1072)
11. ALL 1 HR. WALLS : TYPE "X" 5/8" GYP. BRD.(LARR#25766) PTD WITH 1" TYPE S DRYWALL SCREWS 8" O.C. ATVERTICAL JOINTS AND 12" O.C. AT FLOOR AND CEILING RUNNERS AND INTERMEDIATE STUDS. JOINTS STAGGERED 24" ON OPPOSITE SIDE. MIN. STC 40

WALL TYPE "K "

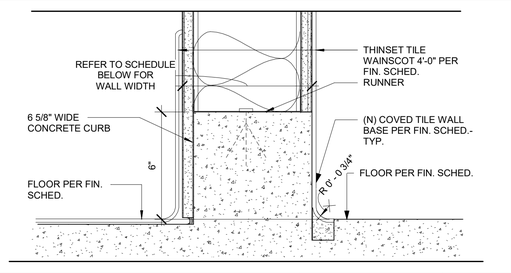

FLOOR PLAN TAG **PROVIDE** SOUND ATTENUATION	WALL **R-VALUE**	STUD SIZE	WALL WIDTH	FIRE RATING	UL LISTING
K	R-VALUE	8"	9 1/4"	NON-RATED	N/A
K1	R-VALUE	6"	7 1/4"	NON-RATED	N/A

WALL TYPE "G"

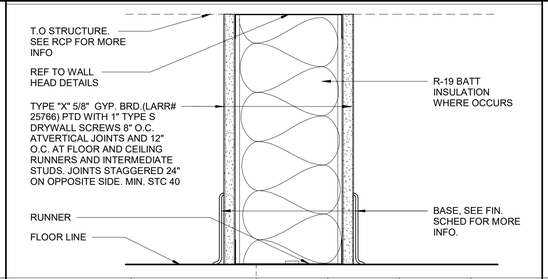

FLOOR PLAN TAG **PROVIDE** SOUND ATTENUATION	WALL **R-VALUE**	STUD SIZE	WALL WIDTH	FIRE RATING	UL LISTING
G	R-VALUE	8"	9 1/4"	1 HR.	N/A
G1	R-19	6"	7 1/4"	NON RATED	N/A

WALL TYPE "D"

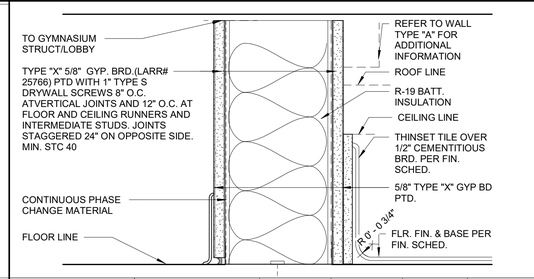

FLOOR PLAN TAG **PROVIDE** SOUND ATTENUATION	WALL **R-VALUE**	STUD SIZE	WALL WIDTH	FIRE RATING	UL LISTING
D	R-VALUE	8"	9 1/4"	1 HR.	N/A

BUREAU OF ENGINEERING
OFFICIAL RECORD

ENGINEERING
CITY OF LOS ANGELES

BUREAU OF ENGINEERING
DEPARTMENT OF PUBLIC WORKS
CITY OF LOS ANGELES

NO.	REVISION DESCRIPTION	DATE	BY

BUILDING NO. -

INDEX NO. **RP-300106**

LICENSED ARCHITECT TED ALLEN LIC. NO. C 23333 REGISTERED CALIFORNIA STATE OF CALIFORNIA

CITY ENGINEER	DATE:
ARCHITECTURAL DIVISION	
ARCHITECT: ROBERT LOMELIN LIC. NO.: C	1-24-2019
DESIGNED BY: Z. AKHTER, M. CHAVARRIA, A. KIM, M. LAM	1-24-2019
DRAWN BY: Z. AKHTER, M. CHAVARRIA, A. KIM	1-24-2019
CHECKED BY: ROBERT LOMELIN	1-24-2019
APPROVED BY:MAHMOOD KARIMZADEH,AIA, DEPUTY CITY ENGINEER	1-24-2019

CLIENT: DEPARTMENT OF RECREATION AND PARKS
GENERAL MANAGER: MICHAEL A. SHULL

SHEET TITLE: WALL TYPES

PROJECT: STUDIO CITY RECREATION CENTER

ADDRESS: 12621 RYE STREET, STUDIO CITY, CA 91604

WORK ORDER NO. E170267B

PLAN FILE NO. 860

DRAWING NO. A520

SHEET 87 OF SHEETS 211

TED ALLEN, PE
ARCHITECTURAL DIVISION

PLOTTED:7/1/2019 11:31:22 AM

THE CITY OF LOS ANGELES OR ITS OFFICERS OR AGENTS SHALL NOT BE RESPONSIBLE FOR THE ACCURACY OR COMPLETENESS OF ELECTRONIC COPIES OF THIS PLAN SHEET.

FILE PATH: A360://Studio City Recreation Center/SCRC-Project Model_Central_Final.rvt

SHEET ISSUE DATE: 10/09/17

REVISION DATES (DESIGN STAGE ONLY)

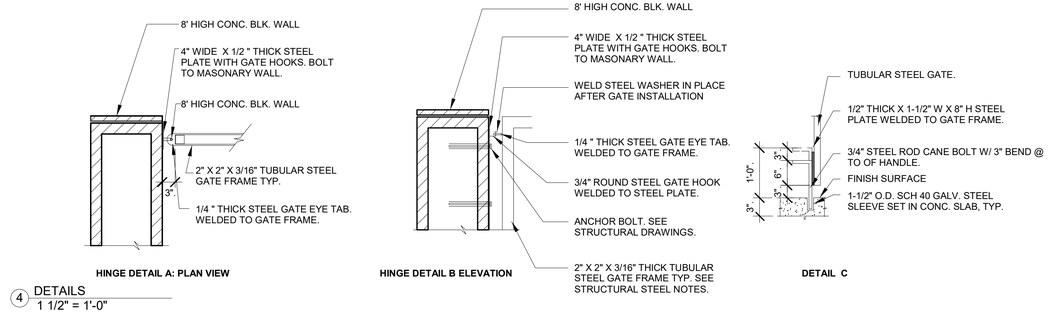

4 DETAILS
1 1/2" = 1'-0"

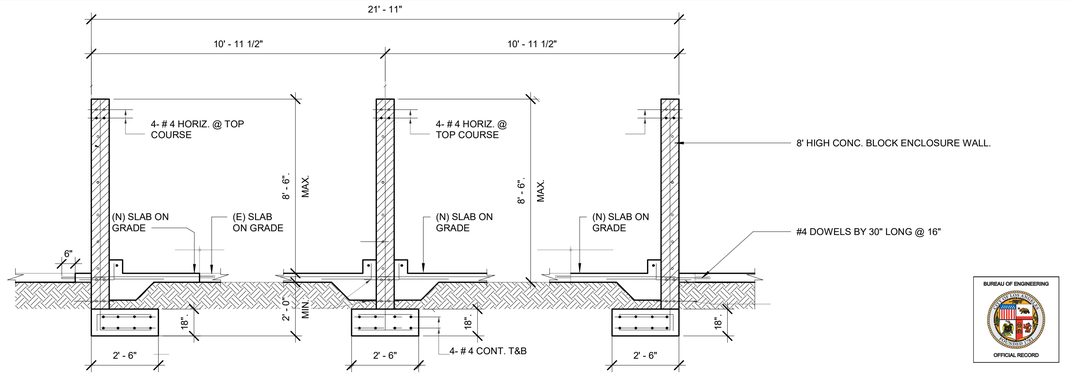

3 SECTION
3/8" = 1'-0"

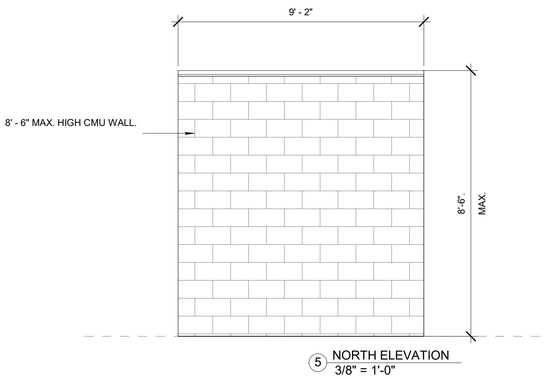

5 NORTH ELEVATION
3/8" = 1'-0"

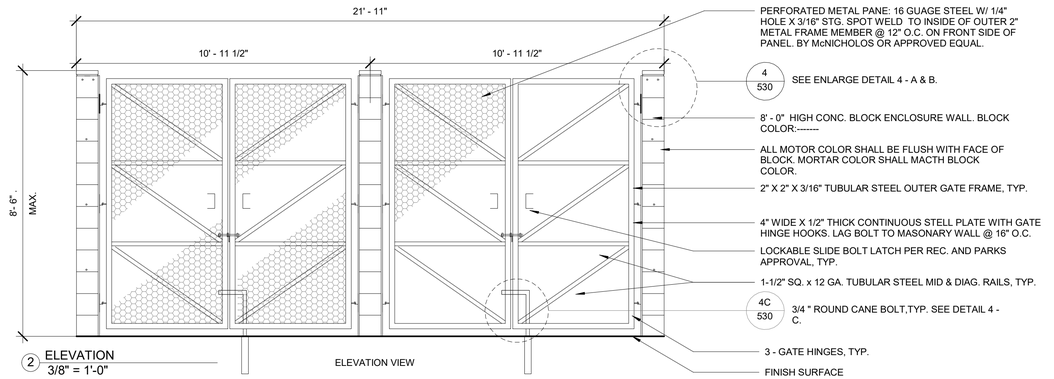

2 ELEVATION
3/8" = 1'-0"

ELEVATION VIEW

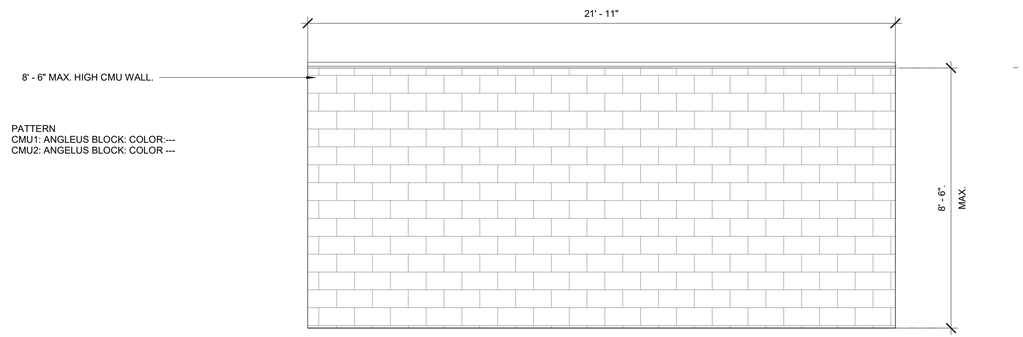

6 EAST ELEVATION
3/8" = 1'-0"

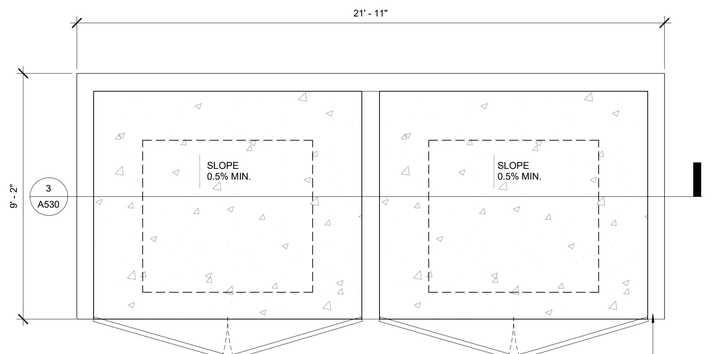

1 FOUNDATION PLAN
3/8" = 1'-0"

TOP VIEW

NOTES:

1. CONTRACTOR SHALL PROVIDE SHOP DRAWINGS TO THE PROJECT MANAGER FOR REVIEW AND APPROVAL PRIOR TO FABRICATION OR INSTALLATION.
2. ALL METAL WORK SHALL COMPLY WITH THE S.S.P.W.C "GREENBOOK." ALL PAINTING AND WELDING SHALL FOLLOW REQUIREMENTS OF BCA FOR SHOP AND FIELD INSPECTION.
3. ALL CONNECTIONS SHALL BE FULLY WELDED. ALL WELDS SHALL BE A MINIMUM OF 1/8" THICK W/ COMPLETE PENETRATION TENSILE STRENGTH IN CONFORMANCE WITH SSPWC SECTION 304-1.9
4. GRIND ALL WELDS SMOOTH. REMOVE ALL LOOSE MILL, SCALE, RUST, OIL, & GREASE PRIOR TO PAINTING.
5. ALL METAL COMPONENTS SHALL BE SHOP PRIMED WITH ONE 2MIL. COAT ALKYD CORROSION INHIBITING PRIMER AND TWO 1.5 MIL. COATS OF SEMI-GLOSS ACRYLIC LATEX ENAMEL.
6. ANY PAINTED SURFACE DAMAGED DURING DELIVERY OR I NSTALLATION SHALL BE SANDED SMOOTH, PRIMED & REPAINTED WITH TWO COATS OF THE SPECIFIED ACRYLIC LATEX ENAMEL.
7. FOR ADDITIONAL DETAILS SEE STRUCTURAL DRAWINGS.

THE CITY OF LOS ANGELES OR ITS OFFICERS OR AGENTS SHALL NOT BE RESPONSIBLE FOR THE ACCURACY OR COMPLETENESS OF ELECTRONIC COPIES OF THIS PLAN SHEET.

FILE PATH: A360://Studio City Recreation Center/SCRC-Project Model_Central_Final.rvt

SHEET ISSUE DATE: 10/17/18

REVISION DATES (DESIGN STAGE ONLY)

BUREAU OF ENGINEERING
OFFICIAL RECORD

LICENSED ARCHITECT LOMELIN R. C. 23333 REGISTRATION STATE OF CALIFORNIA

BUREAU OF ENGINEERING
ENGINEERING
CITY OF LOS ANGELES

NO.	REVISION DESCRIPTION	DATE	BY

BUILDING NO. -

INDEX NO. RP-300106

DEPARTMENT OF PUBLIC WORKS
CITY OF LOS ANGELES

CITY ENGINEER
TED ALLEN, PE
DATE: 1-24-2019

ARCHITECTURAL DIVISION
ARCHITECT: ROBERT LOMELIN LIC. NO.: C 23333 1-24-2019
DESIGNED BY: Z. AKHTER, M. CHAVARRIA, A. KIM, M. LAM 1-24-2019
DRAWN BY: Z. AKHTER, M. CHAVARRIA, A. KIM 1-24-2019
CHECKED BY: ROBERT LOMELIN 1-24-2019
APPROVED BY:MAHMOOD KARIMZADEH,AIA, DEPUTY CITY ENGINEER 1-24-2019

CLIENT: DEPARTMENT OF RECREATION AND PARKS
GENERAL MANAGER: MICHAEL A. SHULL

SHEET TITLE: TRASH ENCLOSURE

PROJECT: STUDIO CITY RECREATION CENTER

ADDRESS: 12621 RYE STREET, STUDIO CITY, CA 91604

WORK ORDER NO. E170267B
PLAN FILE NO. 860
DRAWING NO. A530
SHEET 88 OF SHEETS 211

PLOTTED:7/1/2019 11:31:25 AM

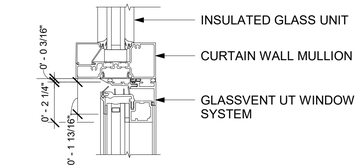

DETAIL 4A SILL1" INFILL PROJECT OUT

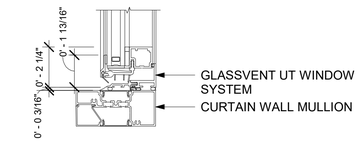

DETAIL 4B SILL1" INFILL PROJECT OUT

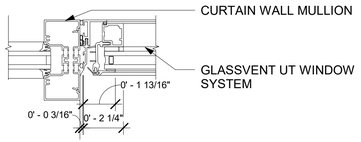

DETAIL 4C JAMB 1" INFILL PROJECT OUT

4 KAWNEER GLASSVENT WINDOW
3" = 1'-0"

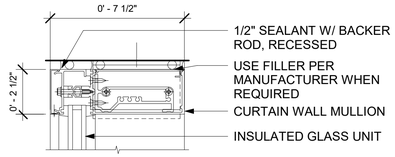

DETAIL 1A HEAD 1" INFILL

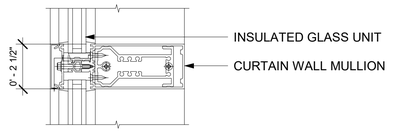

DETAIL 1B HORIZONTAL 1" INFILL

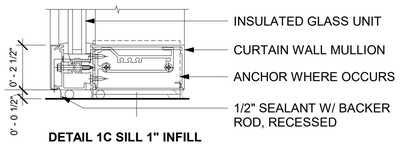

DETAIL 1C SILL 1" INFILL

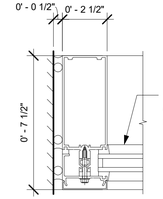

DETAIL 1D JAMB 1" INFILL

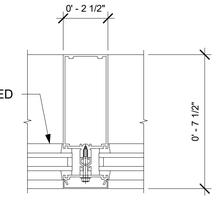

DETAIL 1F VERTICAL MULLION 1" INFILL

1 KAWNEER 7.5" 1600UT DETAILS
3" = 1'-0"

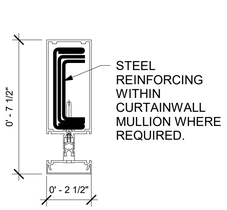

DETAIL 2A STEEL REINFORCING DETAIL

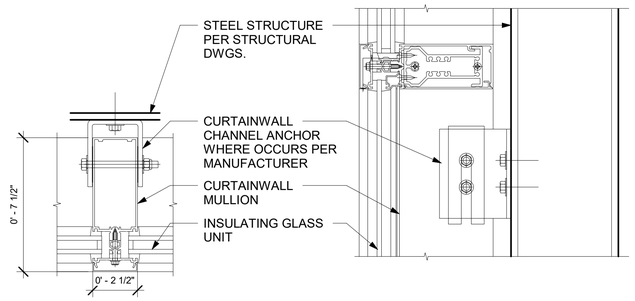

DETAIL 2B ANCHORING TO VERTICAL STEEL PLAN VIEW

DETAIL 2C ANCHORING TO VERTICAL STEEL SECTION VIEW

2 KAWNEER ANCHOR AND REIFORCEMENT DETAILS
3" = 1'-0"

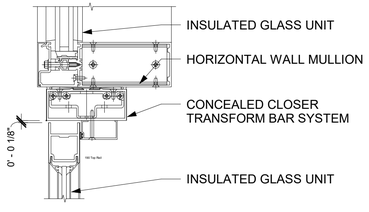

DETAIL 3A CONCEALED CLOSER TRANSOM BAR 1" INFILL

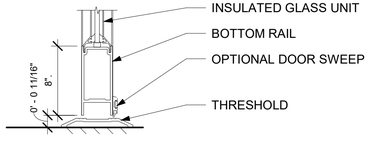

DETAIL 3B BOTTOM RAIL SINGLE ACTING

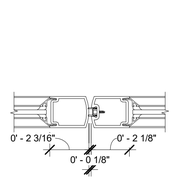

DETAIL 3C MEETING STILES

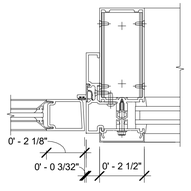

DETAIL 3D DOOR JAMB

3 KAWNEER THERMAL ENTRANCE DETAILS
3" = 1'-0"

BUREAU OF ENGINEERING
OFFICIAL RECORD

THE CITY OF LOS ANGELES OR ITS OFFICERS OR AGENTS SHALL NOT BE RESPONSIBLE FOR THE ACCURACY OR COMPLETENESS OF ELECTRONIC COPIES OF THIS PLAN SHEET.

FILE PATH: A360://Studio City Recreation Center/SCRC-Project Model_Central_Final.rvt

SHEET ISSUE DATE: 10/10/17

REVISION DATES (DESIGN STAGE ONLY)

DEPARTMENT OF PUBLIC WORKS
CITY OF LOS ANGELES

BUREAU OF ENGINEERING
CITY OF LOS ANGELES

NO.	REVISION DESCRIPTION	DATE	BY

BUILDING NO. -

INDEX NO. **RP-300106**

LICENSED ARCHITECT TED ALLEN LIC. NO. C 23333 REGISTERED STATE OF CALIFORNIA

TED ALLEN, PE

	CITY ENGINEER	DATE:
ARCHITECTURAL DIVISION	LIC. NO.: C 23333	1-24-2019
ARCHITECT: ROBERT LOMELIN	Z. AKHTER, M. CHAVARRIA, A. KIM, M. LAM	1-24-2019
DESIGNED BY: Z. AKHTER, M. CHAVARRIA, A. KIM		1-24-2019
DRAWN BY: Z. AKHTER, M. CHAVARRIA, A. KIM		1-24-2019
CHECKED BY: ROBERT LOMELIN	DEPUTY CITY ENGINEER	1-24-2019
APPROVED BY: MAHMOOD KARIMZADEH, AIA	DEPUTY CITY ENGINEER	1-24-2019

CLIENT: DEPARTMENT OF RECREATION AND PARKS
GENERAL MANAGER: MICHAEL A. SHULL

SHEET TITLE: EXTERIOR DETAILS CURTAIN WALL

PROJECT: STUDIO CITY RECREATION CENTER

ADDRESS: 12621 RYE STREET, STUDIO CITY, CA 91604

WORK ORDER NO. E170267B

PLAN FILE NO. 860

DRAWING NO. **A601**

SHEET 89 OF SHEETS 211

PLOTTED:7/1/2019 11:31:30 AM

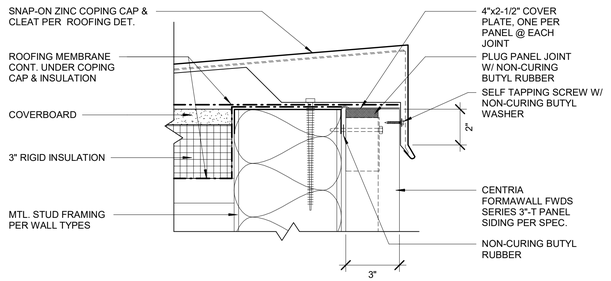

7 CENTRIA - GYM WALL PARAPET DETAIL
3" = 1'-0"

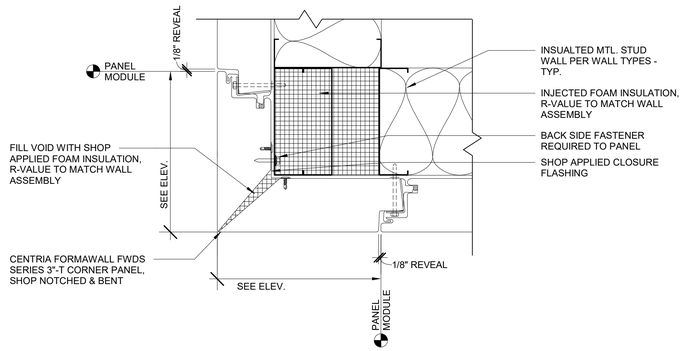

4 CENTRIA - OUTSIDE CORNER DETAIL
3" = 1'-0"

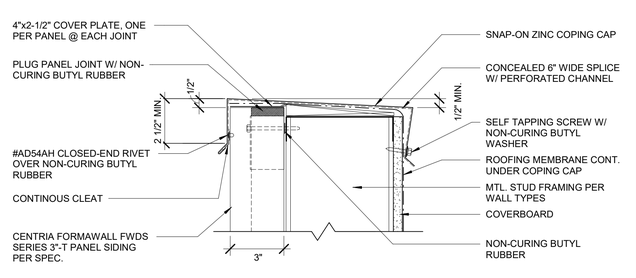

1 CENTRIA - TYPICAL PARAPET DETAIL
3" = 1'-0"

5 CENTRIA - DOOR HEAD DETAIL
3" = 1'-0"

2 CENTRIA - STACK SEAM DETAIL
3" = 1'-0"

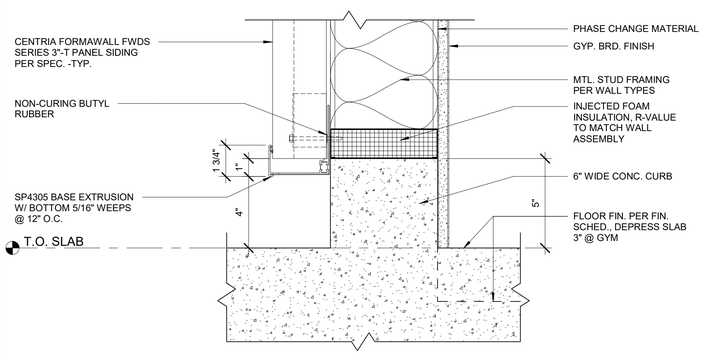

6 CENTRIA - PANEL BASE DETAIL
3" = 1'-0"

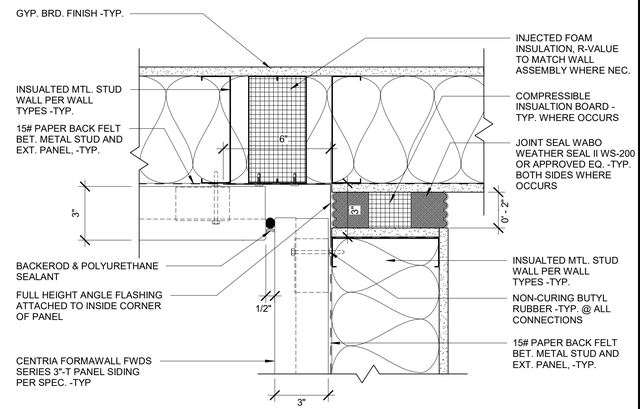

3 CENTRIA - INSIDE CORNER DETAIL
3" = 1'-0"

THE CITY OF LOS ANGELES OR ITS OFFICERS OR AGENTS SHALL NOT BE RESPONSIBLE FOR THE ACCURACY OR COMPLETENESS OF ELECTRONIC COPIES OF THIS PLAN SHEET.

FILE PATH: A360://Studio City Recreation Center/SCRC-Project Model_Central_Final.rvt

SHEET ISSUE DATE: 10/10/17

REVISION DATES: (DESIGN STAGE ONLY)

BUREAU OF ENGINEERING
OFFICIAL RECORD

CITY OF LOS ANGELES
DEPARTMENT OF PUBLIC WORKS
BUREAU OF ENGINEERING
ENGINEERING
CITY OF LOS ANGELES

NO.	REVISION DESCRIPTION	DATE	BY

BUILDING NO. -

INDEX NO. RP-300106

LICENSED ARCHITECT TED ALLEN LOMELIN C 23333 REGISTRATION EXPIRES 08-31-2019 STATE OF CALIFORNIA

CITY ENGINEER	DATE:
ARCHITECTURAL DIVISION	
ARCHITECT: ROBERT LOMELIN	LIC. NO.: C 23333
DESIGNED BY: Z. AKHTER, M. CHAVARRIA, A. KIM, M. LAM	1-24-2019
DRAWN BY: Z. AKHTER, M. CHAVARRIA, A. KIM	1-24-2019
CHECKED BY: ROBERT LOMELIN	1-24-2019
APPROVED BY:MAHMOOD KARIMZADEH,AIA, DEPUTY CITY ENGINEER	1-24-2019

TED ALLEN, PE

CITY OF LOS ANGELES
CLIENT: DEPARTMENT OF RECREATION AND PARKS
GENERAL MANAGER: MICHAEL A. SHULL

SHEET TITLE: EXTERIOR DETAILS

PROJECT: STUDIO CITY RECREATION CENTER

ADDRESS: 12621 RYE STREET, STUDIO CITY, CA 91604

WORK ORDER NO. E170267B

PLAN FILE NO. 860

DRAWING NO. A602

SHEET 90 OF SHEETS 211

PLOTTED:7/1/2019 11:31:34 AM

THE CITY OF LOS ANGELES OR ITS OFFICERS OR AGENTS SHALL NOT BE RESPONSIBLE FOR THE ACCURACY OR COMPLETENESS OF ELECTRONIC COPIES OF THIS PLAN SHEET.

FILE PATH: A360://Studio City Recreation Center/SCRC-Project Model_Central_Final.rvt

SHEET ISSUE DATE: 10/10/17

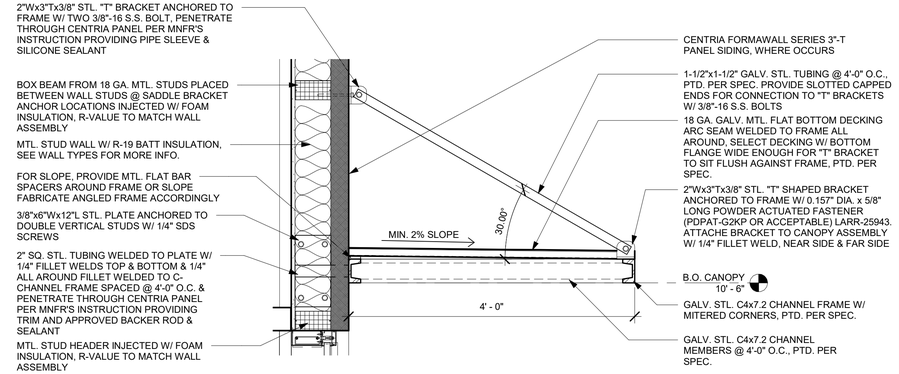

1 CANOPY DETAIL
1" = 1'-0"

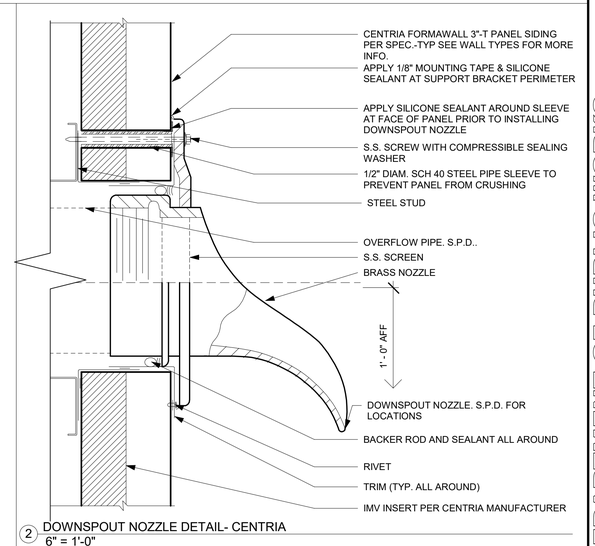

2 DOWNSPOUT NOZZLE DETAIL- CENTRIA
6" = 1'-0"

BUREAU OF ENGINEERING
OFFICIAL RECORD

CITY OF LOS ANGELES
DEPARTMENT OF PUBLIC WORKS
BUREAU OF ENGINEERING

ENGINEERING
CITY OF LOS ANGELES

NO.	REVISION DESCRIPTION	DATE	BY

BUILDING NO. -

INDEX NO. **RP-300106**

LICENSED ARCHITECT LOMELIN C. NO. 23333 RENEWAL 08/31/2019 STATE OF CALIFORNIA

CITY ENGINEER	DATE:
TED ALLEN, PE	1-24-2019
ARCHITECTURAL DIVISION	
ARCHITECT: ROBERT LOMELIN LIC. NO.: C 23333	1-24-2019
DESIGNED BY: Z. AKHTER, M. CHAVARRIA, A. KIM, M. LAM	1-24-2019
DRAWN BY: Z. AKHTER, M. CHAVARRIA, A. KIM	1-24-2019
CHECKED BY: ROBERT LOMELIN	1-24-2019
APPROVED BY:MAHMOOD KARIMZADEH,AIA, DEPUTY CITY ENGINEER	1-24-2019

CLIENT: DEPARTMENT OF RECREATION AND PARKS
GENERAL MANAGER: MICHAEL A. SHULL

SHEET TITLE: EXTERIOR DETAIL

PROJECT: STUDIO CITY RECREATION CENTER

ADDRESS: 12621 RYE STREET, STUDIO CITY, CA 91604

WORK ORDER NO.
E170267B

PLAN FILE NO.
860

DRAWING NO.
A603

SHEET 91 OF SHEETS 211

PLOTTED:7/1/2019 11:31:37 AM

REVISION DATES (DESIGN STAGE ONLY)

THE CITY OF LOS ANGELES OR ITS OFFICERS OR AGENTS SHALL NOT BE RESPONSIBLE FOR THE ACCURACY OR COMPLETENESS OF ELECTRONIC COPIES OF THIS PLAN SHEET.

FILE PATH: A360://Studio City Recreation Center/SCRC-Project Model_Central_Final.rvt

SHEET ISSUE DATE: 10/10/17

REVISION DATES (DESIGN STAGE ONLY)

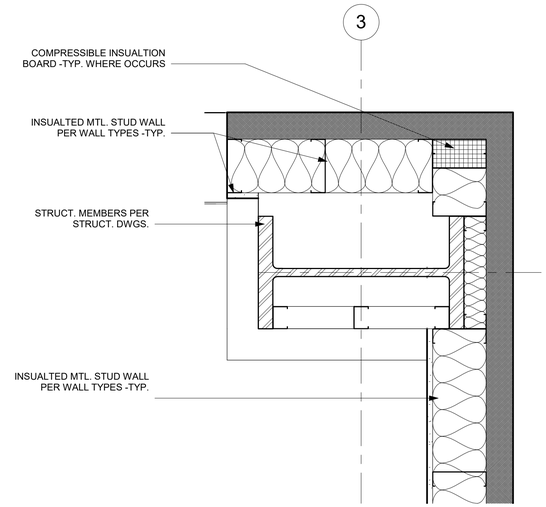

5 COLUMN DETAIL
1 1/2" = 1'-0"

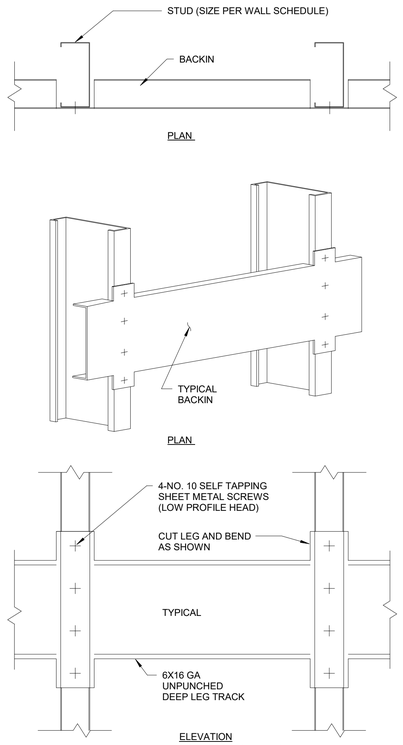

3 BACKING DETAIL- TYP.
3" = 1'-0"

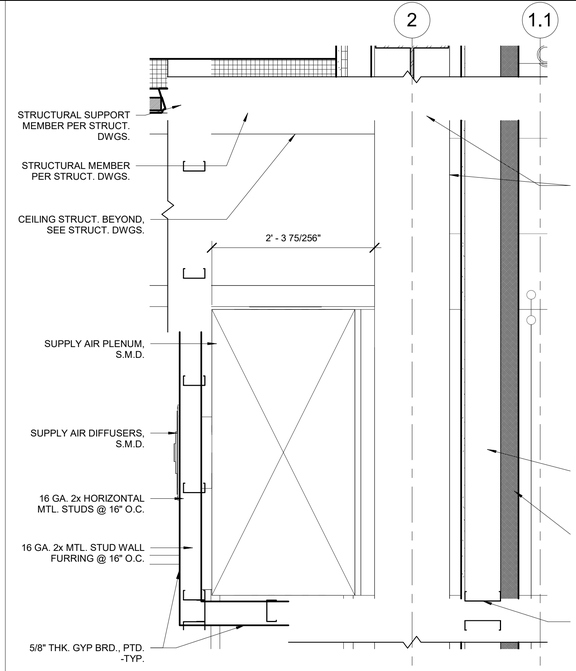

2 AIR PLENUM WALL FURRING
1" = 1'-0"

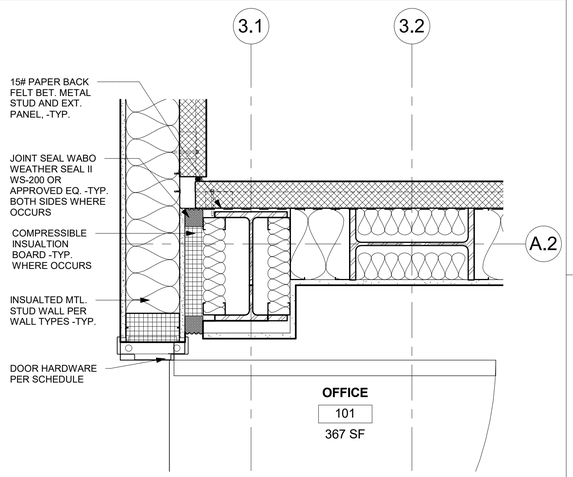

6 FRAMING DETAIL
1 1/2" = 1'-0"

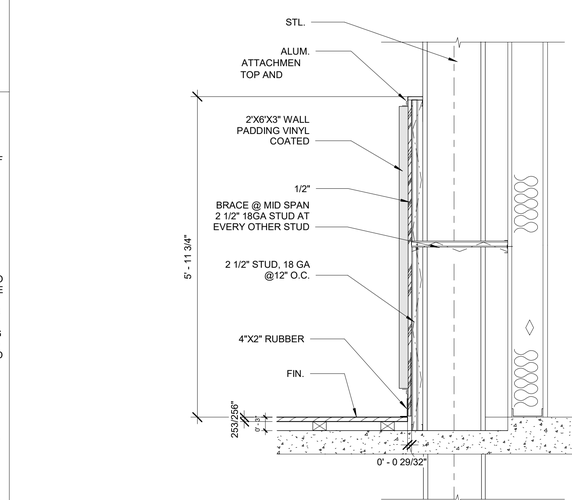

1 PADDING DETAIL
3/4" = 1'-0"

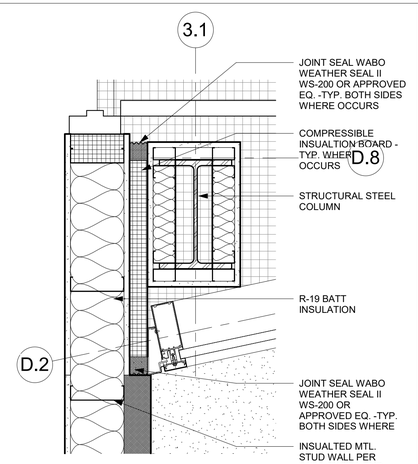

8 BUILDING SEPERATION
1 1/2" = 1'-0"

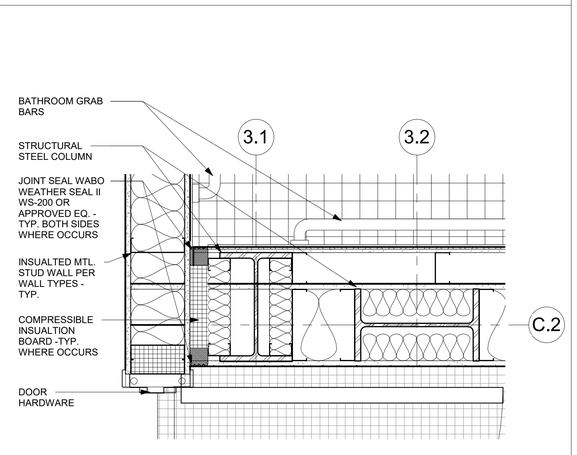

7 FRAMING & BLDG. SEPERATION DETAIL
1 1/2" = 1'-0"

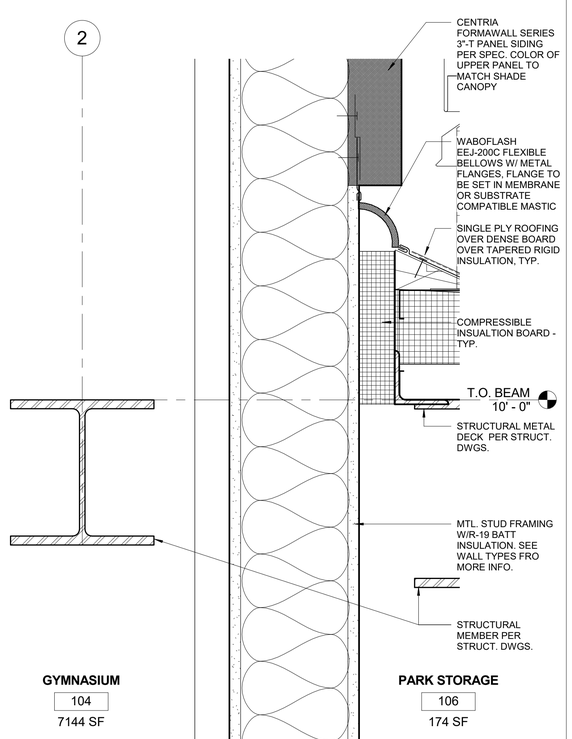

4 CORUUGATED MTL TO BEAM DETAIL
3" = 1'-0"

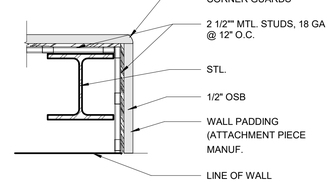

BUREAU OF ENGINEERING
OFFICIAL RECORD

CITY OF LOS ANGELES
DEPARTMENT OF PUBLIC WORKS
BUREAU OF ENGINEERING

ENGINEERING
CITY OF LOS ANGELES

NO.	REVISION DESCRIPTION	DATE	BY

BUILDING NO. --

INDEX NO. RP-300106

LICENSED ARCHITECT TONY LEE CHAVARRIA No. C 23333 REGISTERED PROFESSIONAL ENGINEER STATE OF CALIFORNIA

CITY ENGINEER DATE: 1-24-2019

TED ALLEN, PE

ARCHITECTURAL DIVISION LIC. NO.: C 23333

ARCHITECT: ROBERT LOMELIN

DESIGNED BY: Z. AKHTER, M. CHAVARRIA, A. KIM, M. LAM 1-24-2019

DRAWN BY: Z. AKHTER, M. CHAVARRIA, A. KIM 1-24-2019

CHECKED BY: ROBERT LOMELIN 1-24-2019

APPROVED BY:MAHMOOD KARIMZADEH,AIA, DEPUTY CITY ENGINEER 1-24-2019

CLIENT: DEPARTMENT OF RECREATION AND PARKS

GENERAL MANAGER: MICHAEL A. SHULL

SHEET TITLE: INTERIOR DETAIL

PROJECT: STUDIO CITY RECREATION CENTER

ADDRESS: 12621 RYE STREET, STUDIO CITY, CA 91604

WORK ORDER NO. E170267B

PLAN FILE NO. 860

DRAWING NO. A621

SHEET 92 OF SHEETS 211

PLOTTED:7/30/2019 2:23:41 PM

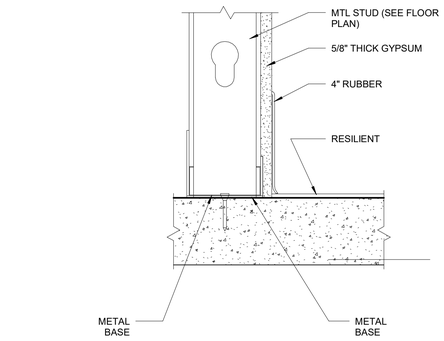

1 RUBBER BASE AND RESILIENT FLOOR DETAIL
3" = 1'-0"

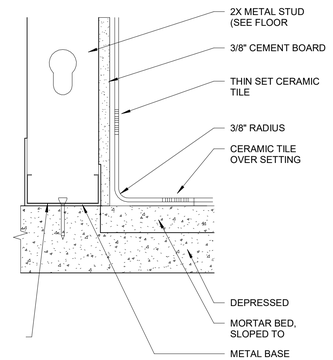

4 TILE WALL AND FLOOR DETAIL
3" = 1'-0"

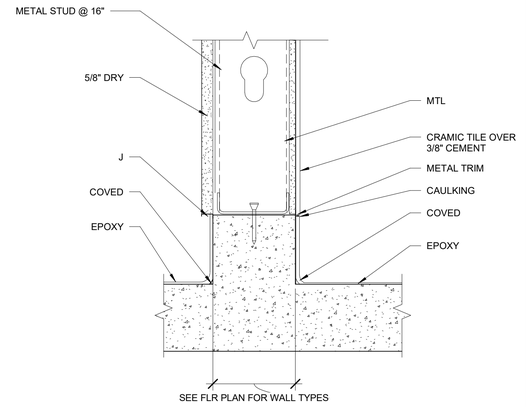

2 PC-CURB AND INTERIOR WALL DETAIL@ RESTROOM
3" = 1'-0"

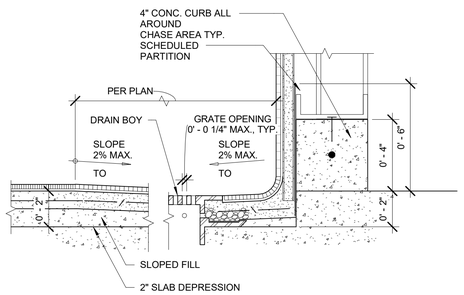

NOTE:

1. SEE DETAIL E5 THIS SHEET FOR REMAINDER OF CALL-

5 TILE FLOOR AT DRAIN DETAIL
3" = 1'-0"

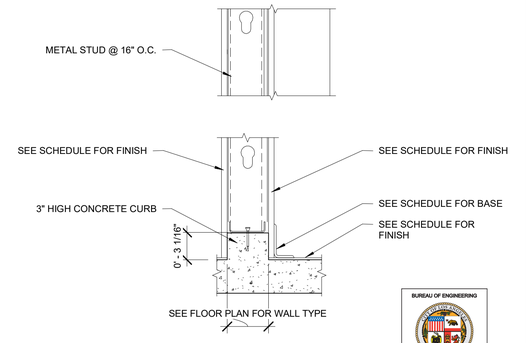

3 CURB AND INTERIOR WALL DETAIL
1 1/2" = 1'-0"

BUREAU OF PUBLIC WORKS
CITY OF LOS ANGELES

DEPARTMENT OF
BUREAU OF ENGINEERING

ENGINEERING
CITY OF LOS ANGELES

NO.	REVISION DESCRIPTION	DATE	BY

BUILDING NO. -

INDEX NO. RP-300106

LICENSED ARCHITECT LOMELIN J. ROBERT LIC. NO. C 23333 REGISTRATION EXPIRES 08/31/2019 STATE OF CALIFORNIA

CITY ENGINEER	DATE:
TED ALLEN, PE	
ARCHITECTURAL DIVISION	
ARCHITECT: ROBERT LOMELIN	LIC. NO.: C 23333
DESIGNED BY: Z. AKHTER, M. CHAVARRIA, A. KIM, M. LAM	1-24-2019
DRAWN BY: Z. AKHTER, M. CHAVARRIA, A. KIM	1-24-2019
CHECKED BY: ROBERT LOMELIN	1-24-2019
APPROVED BY:MAHMOOD KARIMZADEH-AIA, DEPUTY CITY ENGINEER	1-24-2019

CLIENT: DEPARTMENT OF RECREATION AND PARKS
GENERAL MANAGER: MICHAEL A. SHULL

SHEET TITLE: INTERIOR DETAIL- FINISH

PROJECT: STUDIO CITY RECREATION CENTER

ADDRESS: 12621 RYE STREET, STUDIO CITY, CA 91604

BUREAU OF ENGINEERING OFFICIAL RECORD

WORK ORDER NO. E170267B

PLAN FILE NO. 860

DRAWING NO. A622

SHEET 93 OF SHEETS 211

PLOTTED:7/1/2019 11:31:50 AM

THE CITY OF LOS ANGELES OR ITS OFFICERS OR AGENTS SHALL NOT BE RESPONSIBLE FOR THE ACCURACY OR COMPLETENESS OF ELECTRONIC COPIES OF THIS PLAN SHEET.

FILE PATH: A360://Studio City Recreation Center/SCRC-Project Model_Central_Final.rvt

SHEET ISSUE DATE: 10/19/17

REVISION DATES (DESIGN STAGE ONLY)

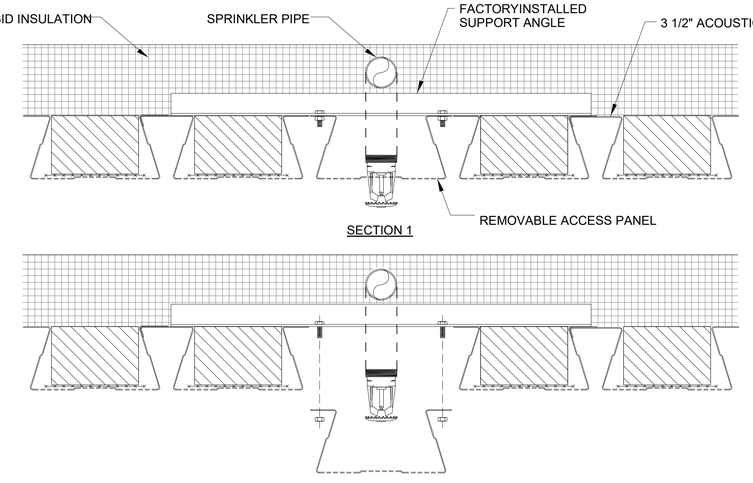

SECTION 1

SECTION 2

(SHOWING ACCESS PANEL REMOVED)

1 ACOUSTIC DECK-ACCESS PANEL
3" = 1'-0"

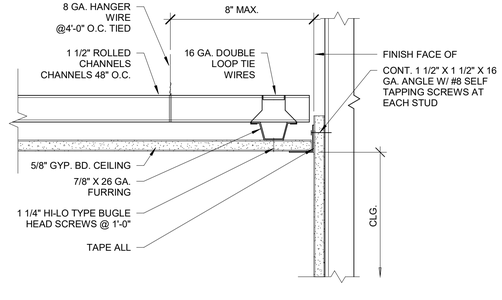

2 GYPSUM BOARD CEILING @ PERIMETER
3" = 1'-0"

THE CITY OF LOS ANGELES OR ITS OFFICERS OR AGENTS SHALL NOT BE RESPONSIBLE FOR THE ACCURACY OR COMPLETENESS OF ELECTRONIC COPIES OF THIS PLAN SHEET.

FILE PATH: A360://Studio City Recreation Center/SCRC-Project Model_Central_Final.rvt
SHEET ISSUE DATE: 10/10/17
REVISION DATES (DESIGN STAGE ONLY)

BUREAU OF ENGINEERING
ENGINEERING
CITY OF LOS ANGELES

NO.	REVISION DESCRIPTION	DATE	BY

BUILDING NO. -
INDEX NO. RP-300106

LICENSED ARCHITECT LOMELIN C-23333 REGISTRATION CALIFORNIA STATE OF

DEPARTMENT OF PUBLIC WORKS
CITY OF LOS ANGELES

TED ALLEN, PE
CITY ENGINEER

		DATE:
ARCHITECTURAL DIVISION		
ARCHITECT: ROBERT LOMELIN	LIC. NO.: C 23333	1-24-2019
DESIGNED BY: Z. AKHTER, M. CHAVARRIA, A. KIM, M. LAM		1-24-2019
DRAWN BY: Z. AKHTER, M. CHAVARRIA, A. KIM		1-24-2019
CHECKED BY: ROBERT LOMELIN		1-24-2019
APPROVED BY:MAHMOOD KARIMZADEH,AIA, DEPUTY CITY ENGINEER		1-24-2019

CLIENT: DEPARTMENT OF RECREATION AND PARKS
GENERAL MANAGER: MICHAEL A. SHULL

SHEET TITLE: INTERIOR DETAIL CEILING

PROJECT: STUDIO CITY RECREATION CENTER

ADDRESS: 12621 RYE STREET, STUDIO CITY, CA 91604

BUREAU OF ENGINEERING OFFICIAL RECORD

WORK ORDER NO. E170267B
PLAN FILE NO. 860
DRAWING NO. A624
SHEET 94 OF SHEETS 211

PLOTTED:7/1/2019 11:31:53 AM

THE CITY OF LOS ANGELES OR ITS OFFICERS OR AGENTS SHALL NOT BE RESPONSIBLE FOR THE ACCURACY OR COMPLETENESS OF ELECTRONIC COPIES OF THIS PLAN SHEET.

FILE PATH: A360://Studio City Recreation Center/SCRC-Project Model_Central_Final.rvt

SHEET ISSUE DATE: 10/10/17

REVISION DATES: (DESIGN STAGE ONLY)

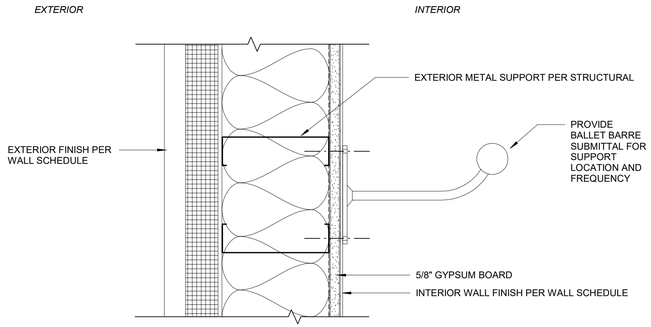

5 BALLET BAR WALL MOUNT
3" = 1'-0"

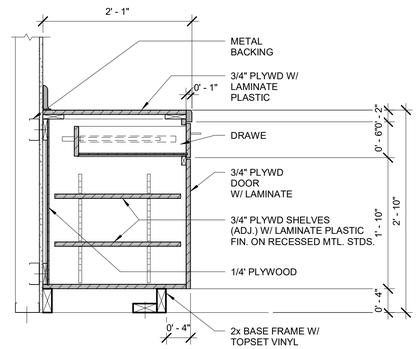

3 BASE CABINET - SHELF UNIT
1" = 1'-0"

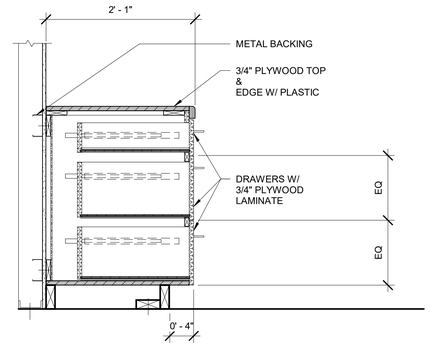

1 BASE CABINET - DRAWER UNIT
1" = 1'-0"

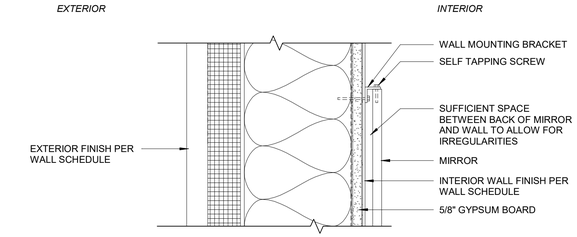

6 MIRROR WALL MOUNT
3" = 1'-0"

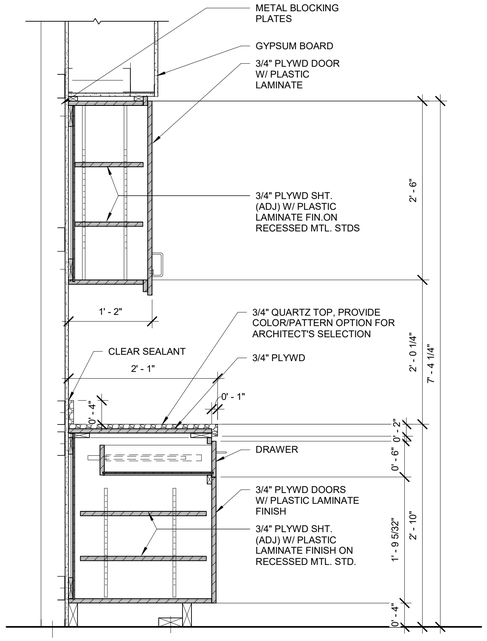

8 KITCHEN CABINET DETAIL - BASE AND WALL UNIT
1" = 1'-0"

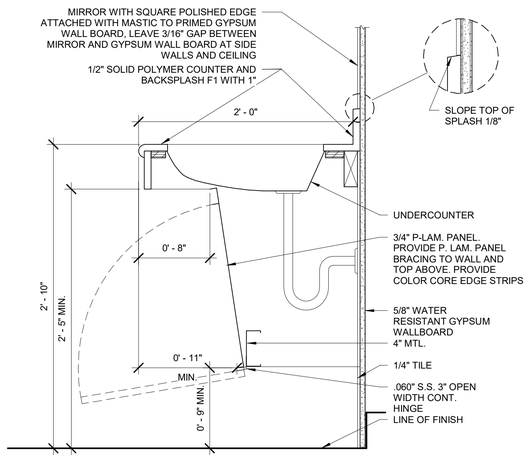

NOTE:
VERIFY ALL DIMENSIONS FOR SINK, COUNTER, AND CABINET TO COMPLY WITH A.D.A.

7 SINK CABINET @ RESTROOM
1 1/2" = 1'-0"

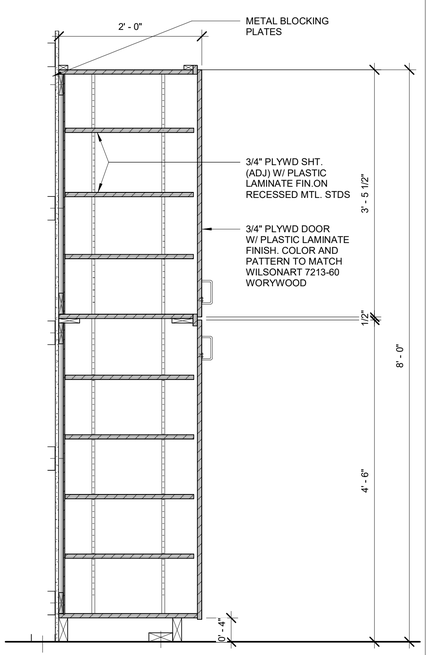

4 OFFICE CABINET DETAIL - TALL
1" = 1'-0"

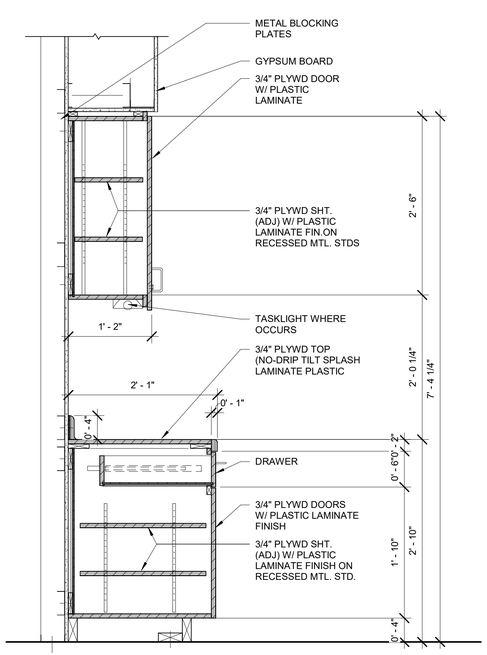

2 OFFICE CABINET DETAIL - BASE AND WALL UNIT
1" = 1'-0"

CITY OF LOS ANGELES
DEPARTMENT OF PUBLIC WORKS
BUREAU OF ENGINEERING

ENGINEERING
CITY OF LOS ANGELES

TED ALLEN, PE
CITY ENGINEER

ARCHITECTURAL DIVISION
ARCHITECT: ROBERT LOMELIN LIC. NO.: C 23333
DESIGNED BY: Z. AKHTER, M. CHAVARRIA, A. KIM, M. LAM
DRAWN BY: Z. AKHTER, M. CHAVARRIA, A. KIM
CHECKED BY: ROBERT LOMELIN
APPROVED BY:MAHMOOD KARIMZADEH,AIA, DEPUTY CITY ENGINEER

CLIENT: DEPARTMENT OF RECREATION AND PARKS
GENERAL MANAGER: MICHAEL A. SHULL

SHEET TITLE: INTERIOR DETAIL- CABINETRY

PROJECT: STUDIO CITY RECREATION CENTER

ADDRESS: 12621 RYE STREET, STUDIO CITY, CA 91604

NO.	REVISION DESCRIPTION	DATE	BY

BUILDING NO. -

INDEX NO. RP-300106

LICENSED ARCHITECT ROBERT LOMELIN C-23333 REGISTRATION STATE OF CALIFORNIA

BUREAU OF ENGINEERING OFFICIAL RECORD

WORK ORDER NO. E170267B

PLAN FILE NO. 860

DRAWING NO. A626

SHEET 95 OF SHEETS 211

PLOTTED:7/1/2019 11:31:57 AM

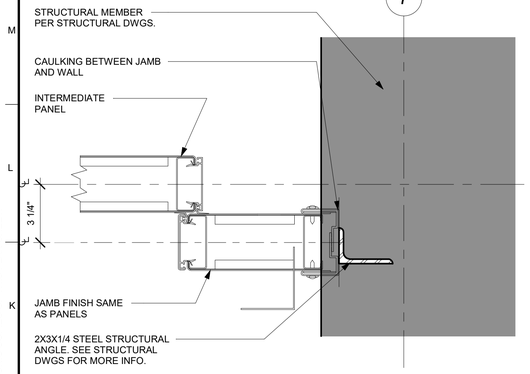

4 MODERNFOLD STACK JAMB DETAIL
3" = 1'-0"

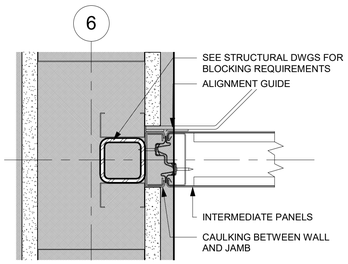

5 MODERNFOLD JAMB
3" = 1'-0"

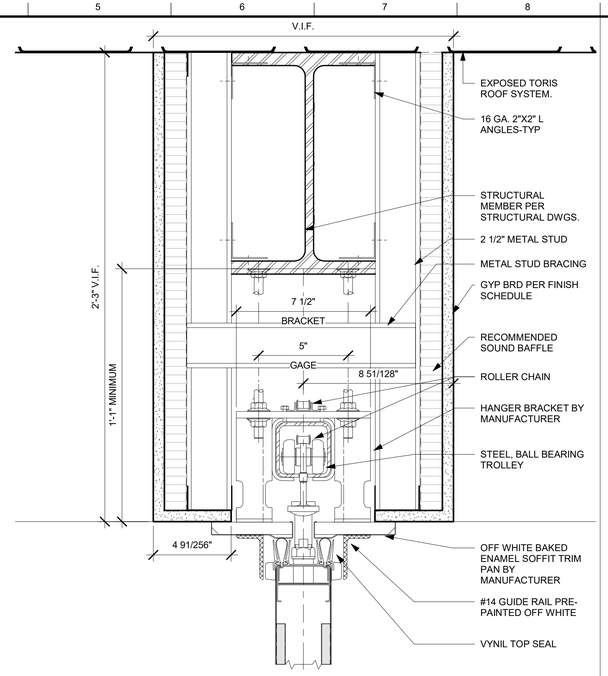

6 MODERNFOLD TOP
3" = 1'-0"

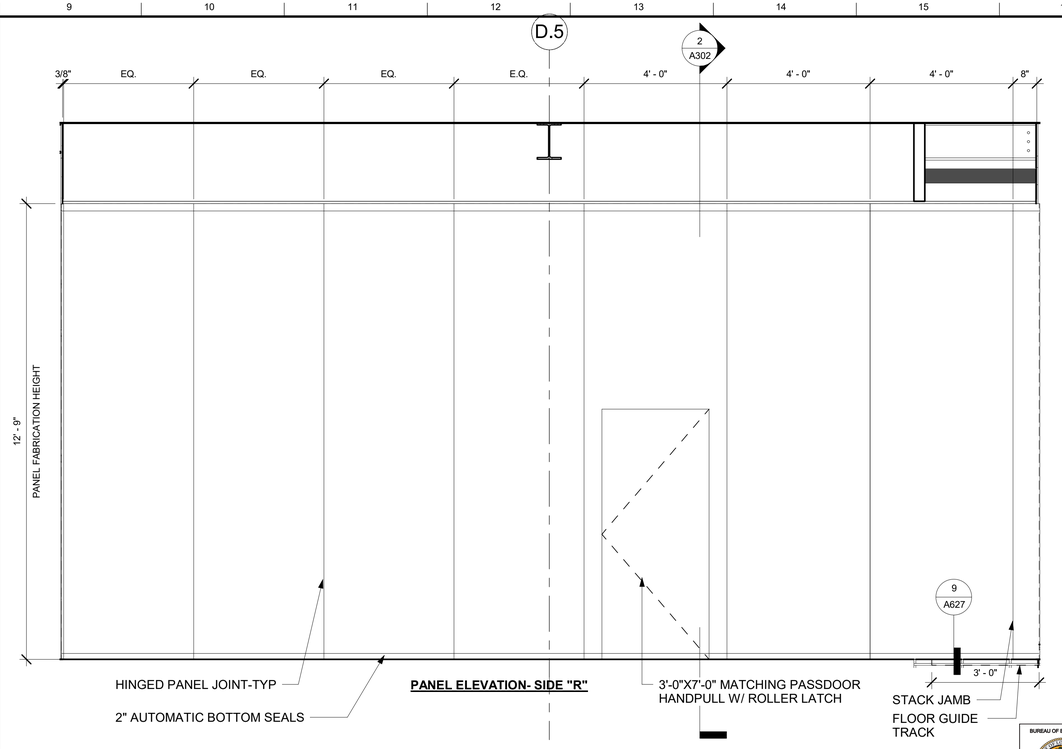

1 MODERNFOLD ELEVATION
1/2" = 1'-0"

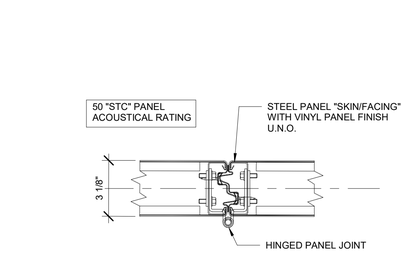

7 MODERNFOLD HINGED PANEL JOINT
3" = 1'-0"

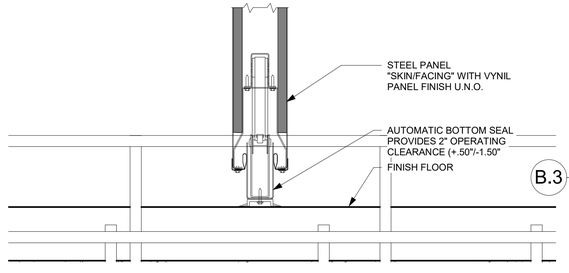

8 MODERNFOLD BOTTOM SEAL
3" = 1'-0"

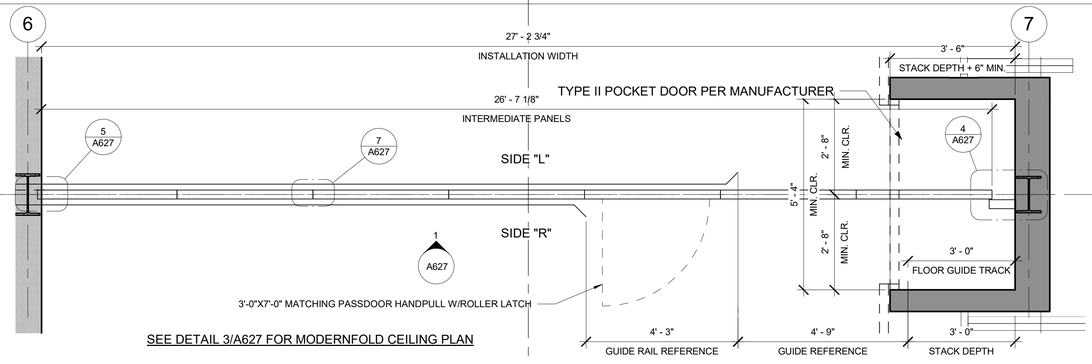

2 MODERNFOLD PLAN
1/2" = 1'-0"

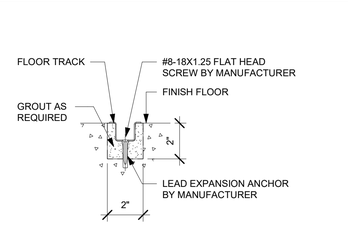

9 MODERNFOLD FLOOR TRACK
3" = 1'-0"

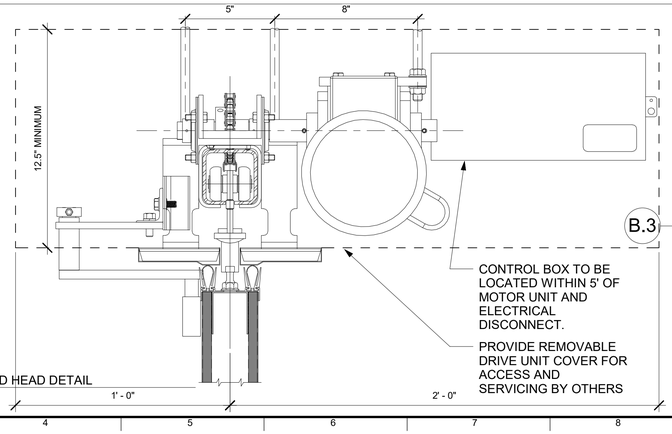

10 MODERNFOLD HEAD DETAIL
3" = 1'-0"

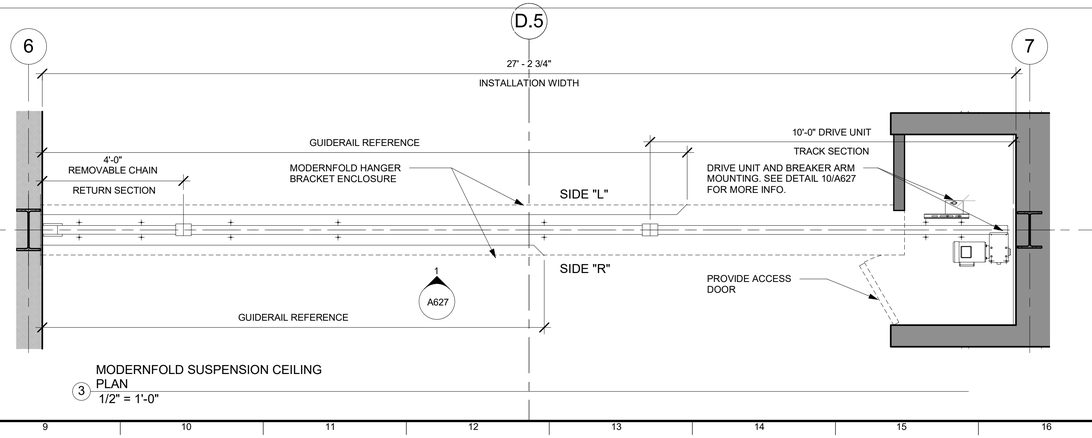

3 MODERNFOLD SUSPENSION CEILING PLAN
1/2" = 1'-0"

THE CITY OF LOS ANGELES OR ITS OFFICERS OR AGENTS SHALL NOT BE RESPONSIBLE FOR THE ACCURACY OR COMPLETENESS OF ELECTRONIC COPIES OF THIS PLAN SHEET.

FILE PATH: A360://Studio City Recreation Center/SCRC-Project Model_Central_Final.rvt

SHEET ISSUE DATE:02/14/18

REVISION DATES: (DESIGN STAGE ONLY)

BUREAU OF ENGINEERING
OFFICIAL RECORD

ENGINEERING
CITY OF LOS ANGELES

BUREAU OF ENGINEERING

NO.	REVISION DESCRIPTION	DATE	BY

BUILDING NO. -

INDEX NO. RP-300106

LICENSED ARCHITECT TED ALLEN LOMELIN C 23333 REGISTERED STATE OF CALIFORNIA

DEPARTMENT OF PUBLIC WORKS
CITY OF LOS ANGELES

CITY ENGINEER		
DATE:		
TED ALLEN, PE		1-24-2019
ARCHITECTURAL DIVISION		1-24-2019
ARCHITECT: ROBERT LOMELIN	LIC. NO.: C 23333	1-24-2019
DESIGNED BY: Z. AKHTER, M. CHAVARRIA, A. KIM, M. LAM		1-24-2019
DRAWN BY: Z. AKHTER, M. CHAVARRIA, A. KIM		1-24-2019
CHECKED BY: ROBERT LOMELIN		1-24-2019
APPROVED BY:MAHMOOD KARIMZADEH,AIA, DEPUTY CITY ENGINEER		1-24-2019

CLIENT: DEPARTMENT OF RECREATION AND PARKS
GENERAL MANAGER: MICHAEL A. SHULL

SHEET TITLE: INTERIOR DETAILS

PROJECT: STUDIO CITY RECREATION CENTER

ADDRESS: 12621 RYE STREET, STUDIO CITY, CA 91604

WORK ORDER NO. E170267B

PLAN FILE NO. 860

DRAWING NO. A627

SHEET 96 OF SHEETS 211

PLOTTED:7/1/2019 11:32:06 AM

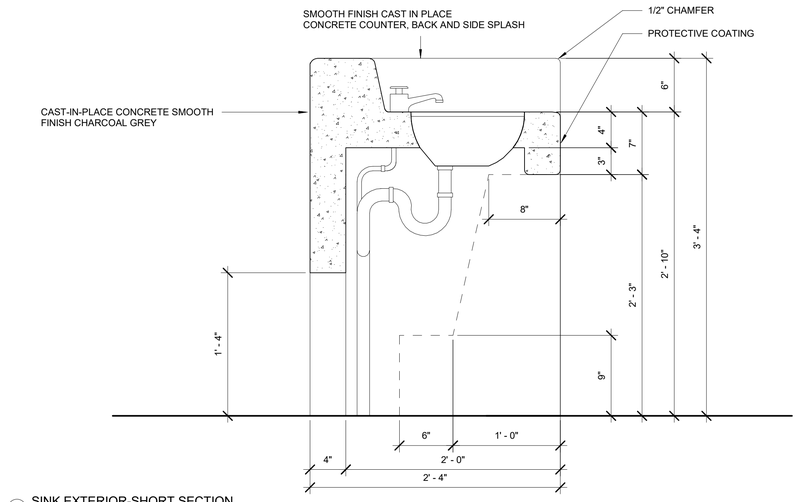

3 SINK EXTERIOR-SHORT SECTION
1 1/2" = 1'-0"

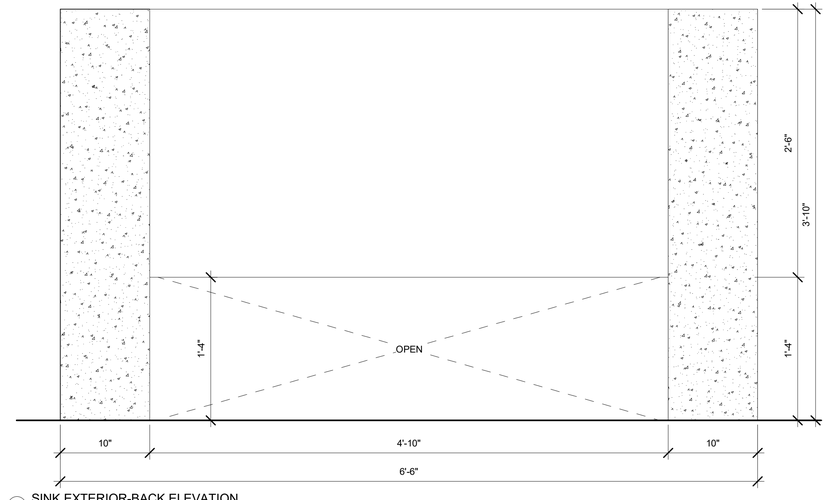

5 SINK EXTERIOR-BACK ELEVATION
1 1/2" = 1'-0"

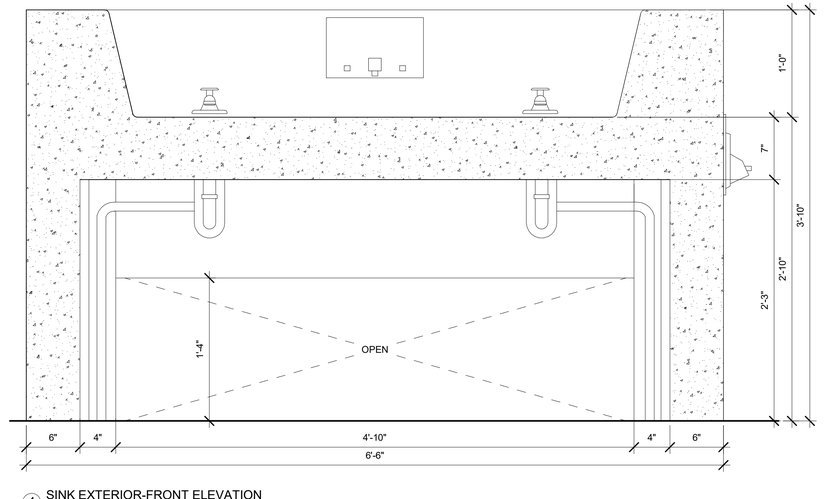

4 SINK EXTERIOR-FRONT ELEVATION
1 1/2" = 1'-0"

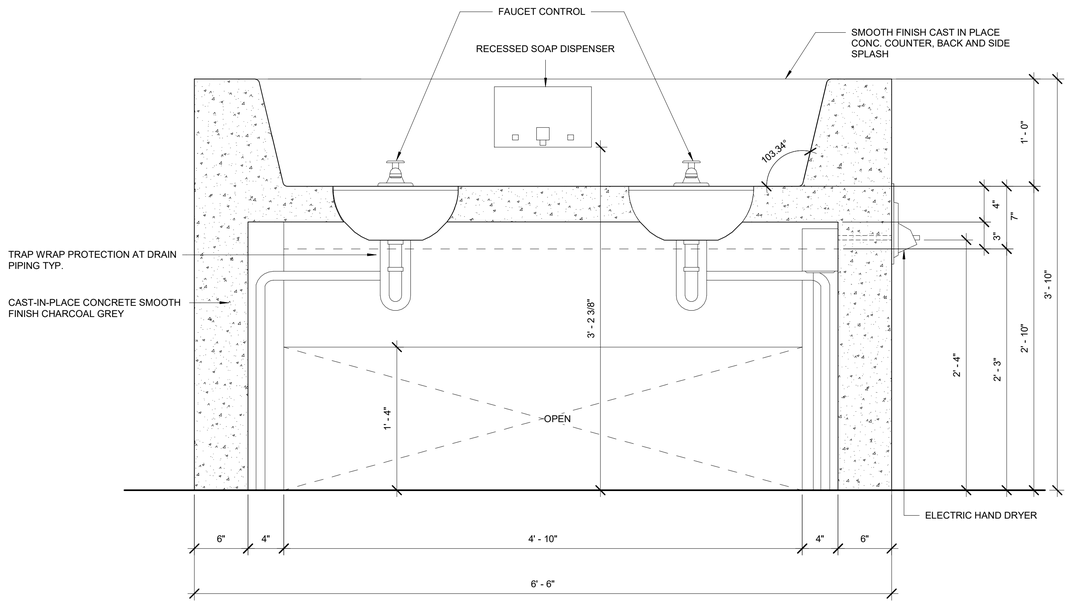

2 SINK EXTERIOR-LONG SECTION
1 1/2" = 1'-0"

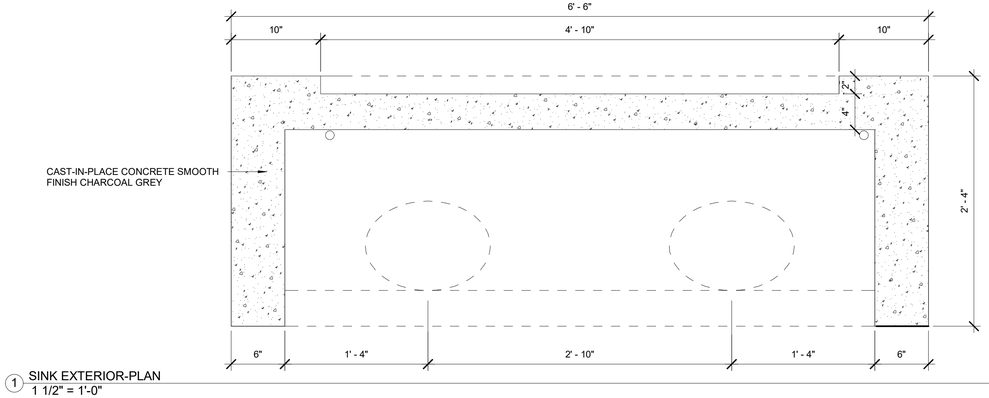

1 SINK EXTERIOR-PLAN
1 1/2" = 1'-0"

GENERAL NOTES:

1. ADD REBAR PER STRUCTURAL NOTES

THE CITY OF LOS ANGELES OR ITS OFFICERS OR AGENTS SHALL NOT BE RESPONSIBLE FOR THE ACCURACY OR COMPLETENESS OF ELECTRONIC COPIES OF THIS PLAN SHEET.

FILE PATH: A360://Studio City Recreation Center/SCRC-Project Model_Central_Final.rvt

SHEET ISSUE DATE: 08/02/18

REVISION DATES (DESIGN STAGE ONLY)

DEPARTMENT OF PUBLIC WORKS
BUREAU OF ENGINEERING
CITY OF LOS ANGELES

ENGINEERING
CITY OF LOS ANGELES

NO.	REVISION DESCRIPTION	DATE	BY

BUILDING NO. -

INDEX NO. **RP-300106**

LICENSED ARCHITECT — LOMELIN — No. 23333 — REGISTERED — STATE OF CALIFORNIA

CITY ENGINEER	DATE:
TED ALLEN, PE	
ARCHITECTURAL DIVISION	LIC. NO.: C 23333
ARCHITECT: ROBERT LOMELIN	1-24-2019
DESIGNED BY: Z. AKHTER, M. CHAVARRIA, A. KIM, M. LAM	1-24-2019
DRAWN BY: Z. AKHTER, M. CHAVARRIA, A. KIM	1-24-2019
CHECKED BY: ROBERT LOMELIN	1-24-2019
APPROVED BY: MAHMOOD KARIMZADEH, AIA, DEPUTY CITY ENGINEER	1-24-2019

CLIENT: DEPARTMENT OF RECREATION AND PARKS
GENERAL MANAGER: MICHAEL A. SHULL

SHEET TITLE: INTERIOR DETAIL- EXTERIOR SINK

PROJECT: STUDIO CITY RECREATION CENTER

ADDRESS: 12621 RYE STREET, STUDIO CITY, CA 91604

BUREAU OF ENGINEERING — OFFICIAL RECORD

WORK ORDER NO. E170267B

PLAN FILE NO. 860

DRAWING NO. **A628**

SHEET 97 OF SHEETS 211

PLOTTED: 7/1/2019 11:32:10 AM

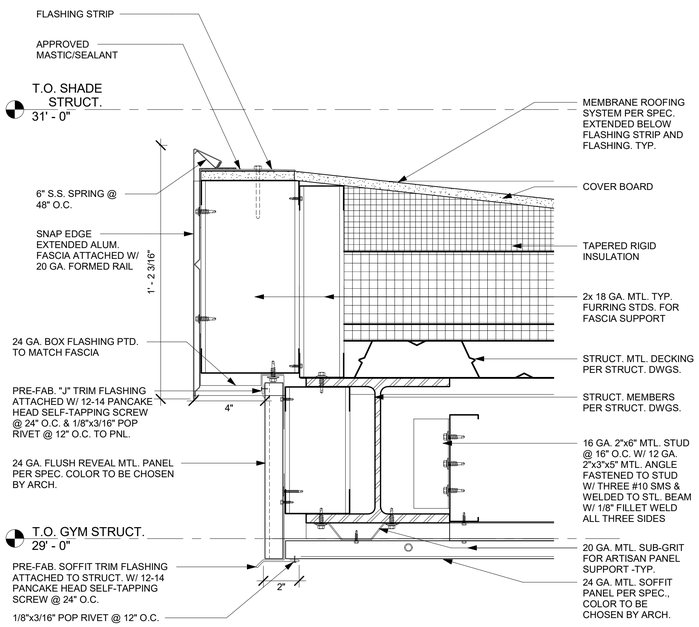

5 LOBBY ROOF EDGE FASCIA DETAIL
3" = 1'-0"

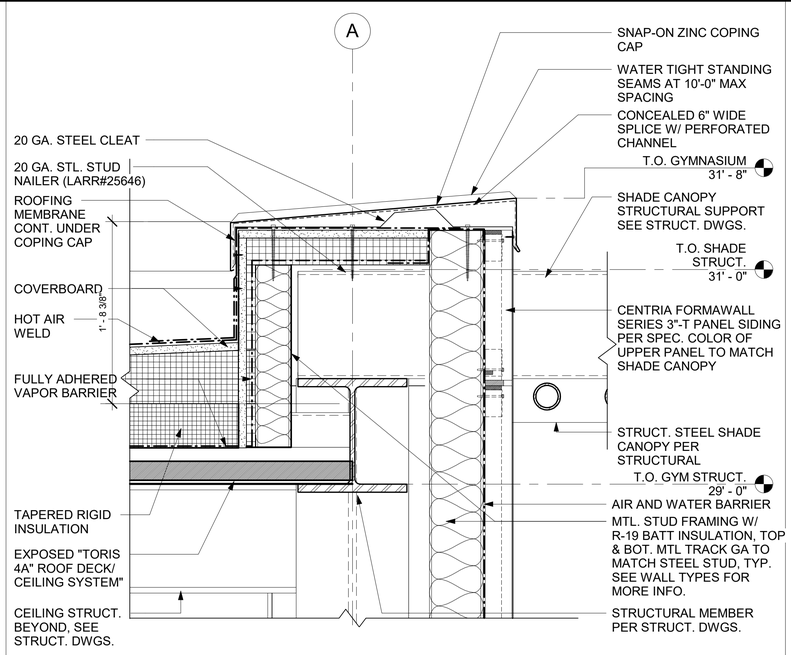

3 ROOF EDGE DETAIL
1 1/2" = 1'-0"

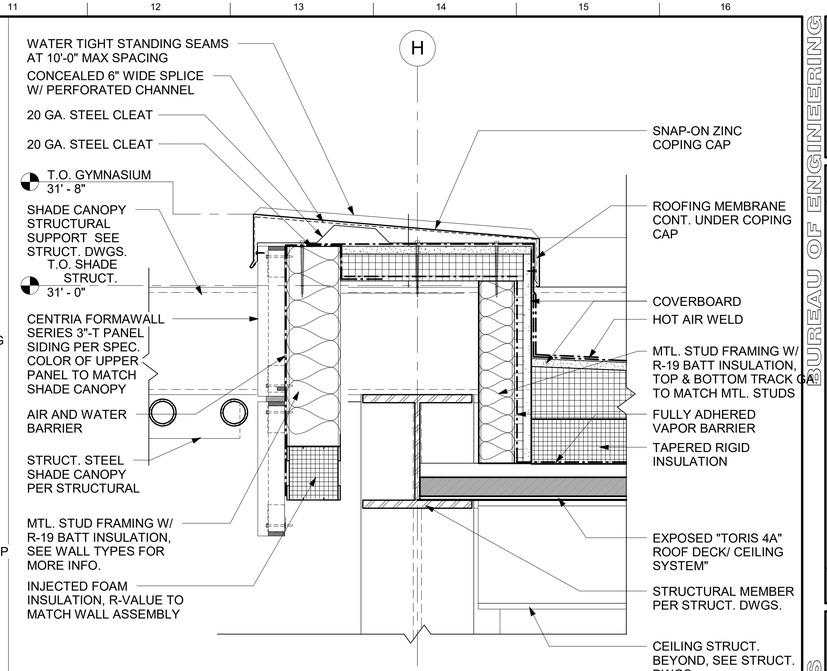

1 ROOF EDGE DETAI- H
1 1/2" = 1'-0"

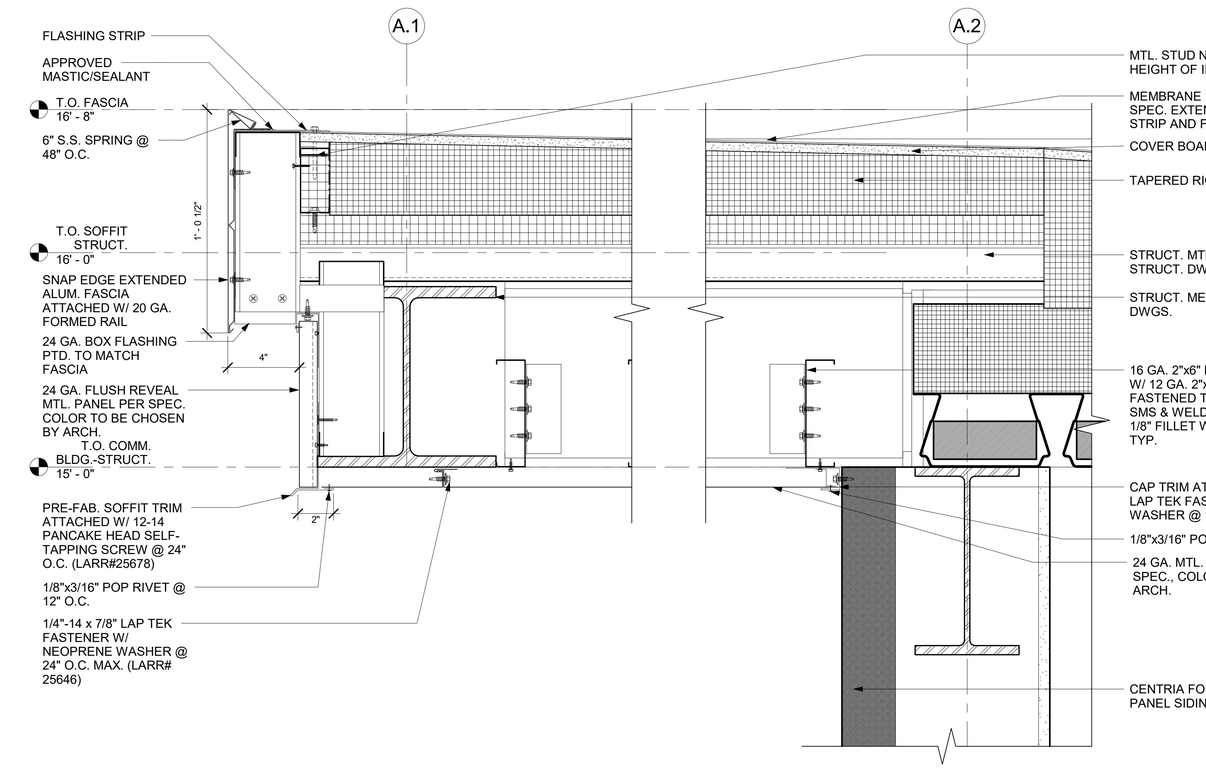

4 Section 7 - Callout 1
3" = 1'-0"

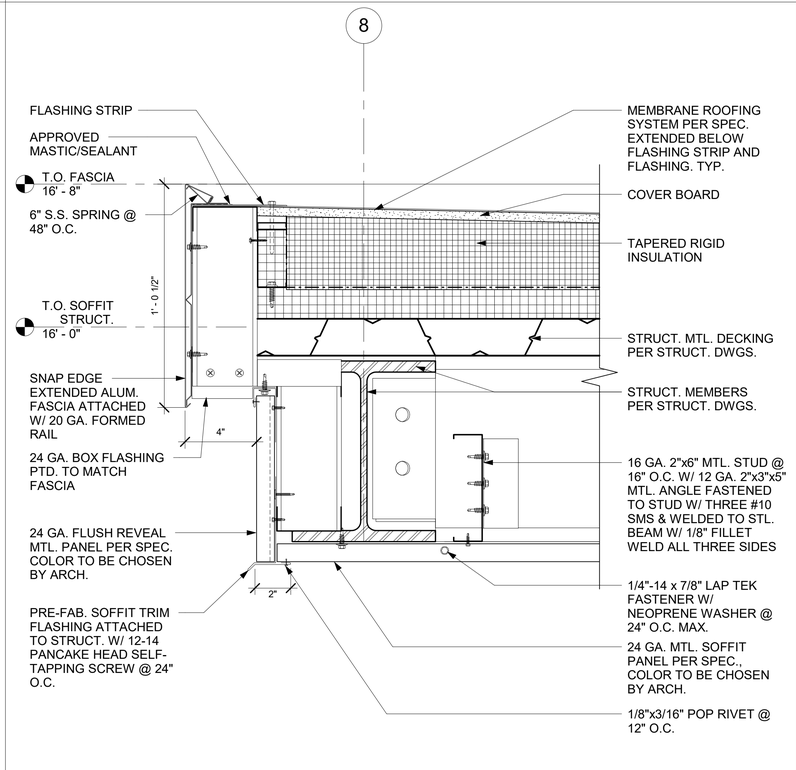

2 ROOF EDGE DETAIL-FASCIA
3" = 1'-0"

THE CITY OF LOS ANGELES OR ITS OFFICERS OR AGENTS SHALL NOT BE RESPONSIBLE FOR THE ACCURACY OR COMPLETENESS OF ELECTRONIC COPIES OF THIS PLAN SHEET.

FILE PATH: A360://Studio City Recreation Center/SCRC-Project Model_Central_Final.rvt

SHEET ISSUE DATE: 10/10/17

REVISION DATES (DESIGN STAGE ONLY)

BUREAU OF ENGINEERING
OFFICIAL RECORD

ENGINEERING
CITY OF LOS ANGELES

BUREAU OF ENGINEERING

NO.	REVISION DESCRIPTION	DATE	BY

BUILDING NO. -

INDEX NO. RP-300106

LICENSED ARCHITECT TED ALLEN LOMELIN C 23333 REGISTERED STATE OF CALIFORNIA

DEPARTMENT OF PUBLIC WORKS
CITY OF LOS ANGELES

CITY ENGINEER	DATE:
TED ALLEN, PE	1-24-2019
ARCHITECTURAL DIVISION	1-24-2019
ARCHITECT: ROBERT LOMELIN LIC. NO.: C 23333	1-24-2019
DESIGNED BY: Z. AKHTER, M. CHAVARRIA, A. KIM, M. LAM	1-24-2019
DRAWN BY: Z. AKHTER, M. CHAVARRIA, A. KIM	1-24-2019
CHECKED BY: ROBERT LOMELIN	1-24-2019
APPROVED BY:MAHMOOD KARIMZADEH,AIA, DEPUTY CITY ENGINEER	1-24-2019

CLIENT: DEPARTMENT OF RECREATION AND PARKS
GENERAL MANAGER: MICHAEL A. SHULL

SHEET TITLE: ROOF DETAILS

PROJECT: STUDIO CITY RECREATION CENTER

ADDRESS: 12621 RYE STREET, STUDIO CITY, CA 91604

WORK ORDER NO. E170267B
PLAN FILE NO. 860
DRAWING NO. A630
SHEET 98 OF SHEETS 211

PLOTTED:7/1/2019 11:32:22 AM

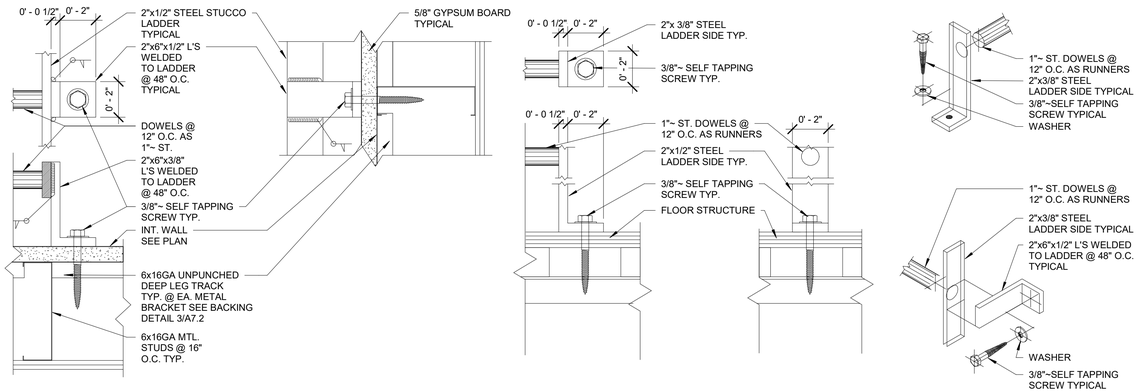

3 LADDER ATTACHMENT DETAIL
3" = 1'-0"

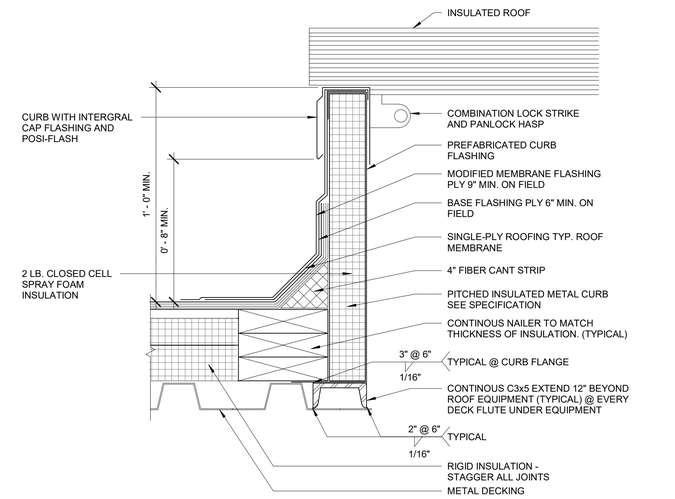

1 INSULATED ROOF HATCH DETAIL
3" = 1'-0"

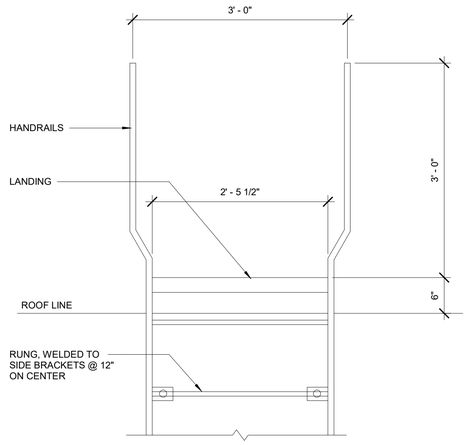

ELEVATION AT TOP

5 LADDER WITH BASKET DETAIL
1" = 1'-0"

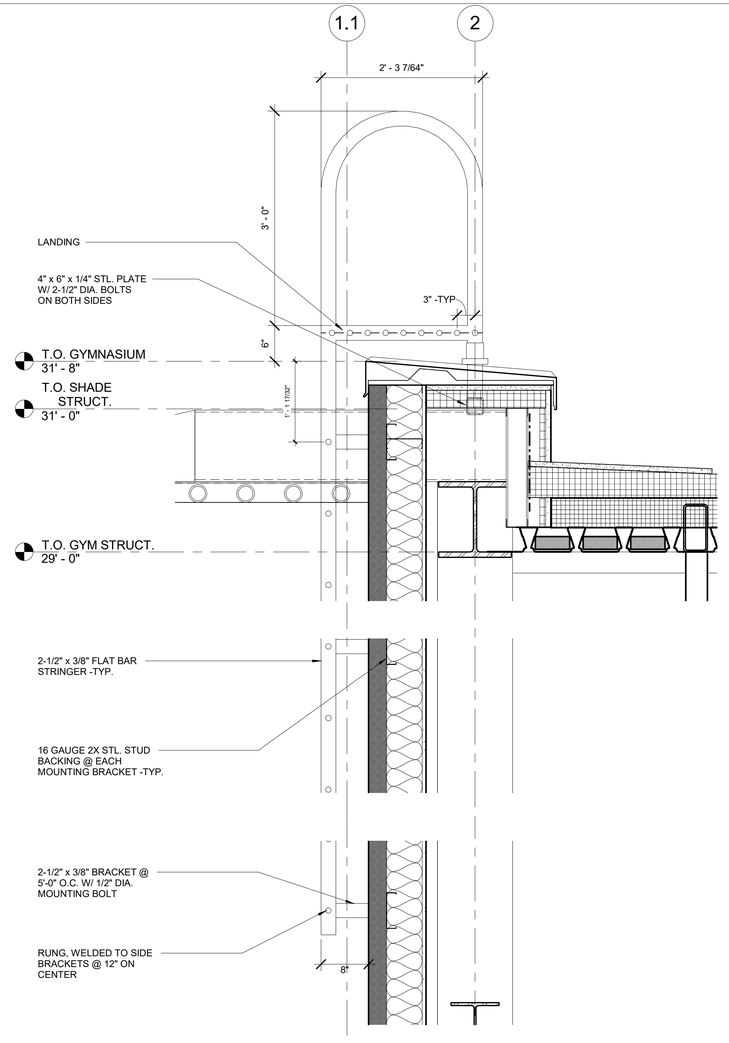

4 GYMNASIUM ROOF ACCESS LADDER
1" = 1'-0"

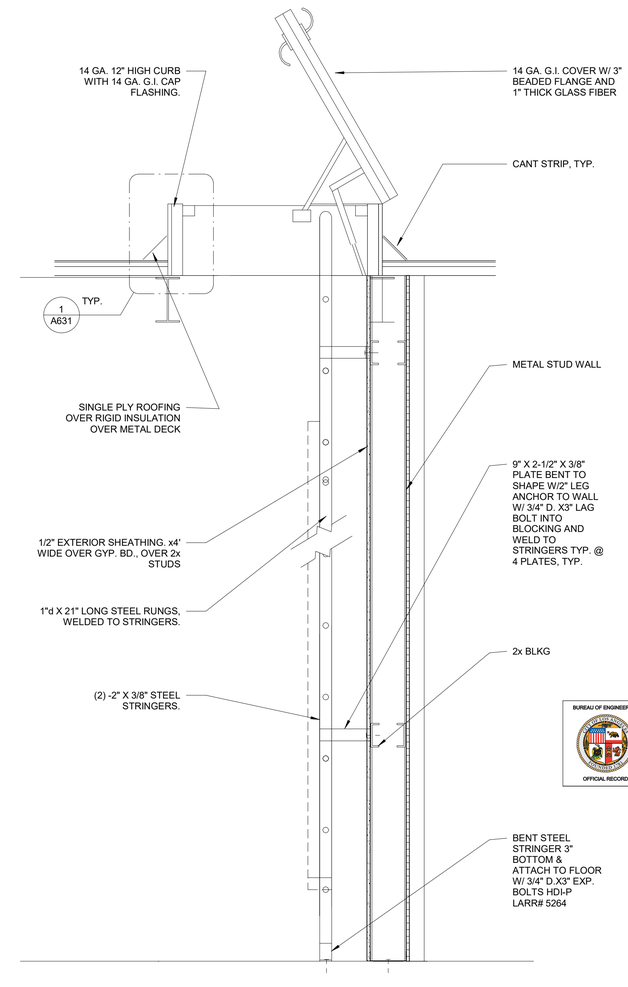

2 ROOF HATCH AND LADDER DETAIL
1" = 1'-0"

BUREAU OF ENGINEERING
OFFICIAL RECORD

THE CITY OF LOS ANGELES OR ITS OFFICERS OR AGENTS SHALL NOT BE RESPONSIBLE FOR THE ACCURACY OR COMPLETENESS OF ELECTRONIC COPIES OF THIS PLAN SHEET.

FILE PATH: A360://Studio City Recreation Center/SCRC-Project Model_Central_Final.rvt

SHEET ISSUE DATE: 10/18/17

REVISION DATES: (DESIGN STAGE ONLY)

BUREAU OF ENGINEERING
CITY OF LOS ANGELES

NO.	REVISION DESCRIPTION	DATE	BY

BUILDING NO. -

INDEX NO. RP-300106

LICENSED ARCHITECT TED ALLEN C. NO. C 23333 RENEWAL 08/31/2019 STATE OF CALIFORNIA

DEPARTMENT OF PUBLIC WORKS
CITY OF LOS ANGELES

CITY ENGINEER	DATE:
TED ALLEN, PE	1-24-2019
ARCHITECTURAL DIVISION	1-24-2019
ARCHITECT: ROBERT LOMELIN LIC. NO.: C 23333	1-24-2019
DESIGNED BY: Z. AKHTER, M. CHAVARRIA, A. KIM, M. LAM	1-24-2019
DRAWN BY: Z. AKHTER, M. CHAVARRIA, A KIM	1-24-2019
CHECKED BY: ROBERT LOMELIN	1-24-2019
APPROVED BY:MAHMOOD KARIMZADEH,AIA, DEPUTY CITY ENGINEER	1-24-2019

CLIENT: DEPARTMENT OF RECREATION AND PARKS
GENERAL MANAGER: MICHAEL A. SHULL

SHEET TITLE: ROOF DETAILS

PROJECT: STUDIO CITY RECREATION CENTER

ADDRESS: 12621 RYE STREET, STUDIO CITY, CA 91604

WORK ORDER NO. E170267B

PLAN FILE NO. 860

DRAWING NO. A631

SHEET 99 OF SHEETS 211

PLOTTED:7/1/2019 11:32:29 AM

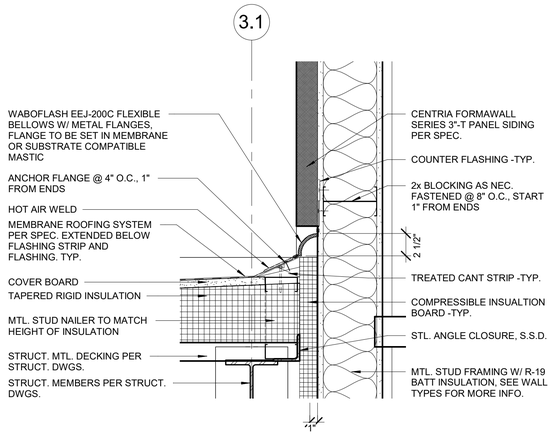

8 ROOF SEPERATION DETAIL
1 1/2" = 1'-0"

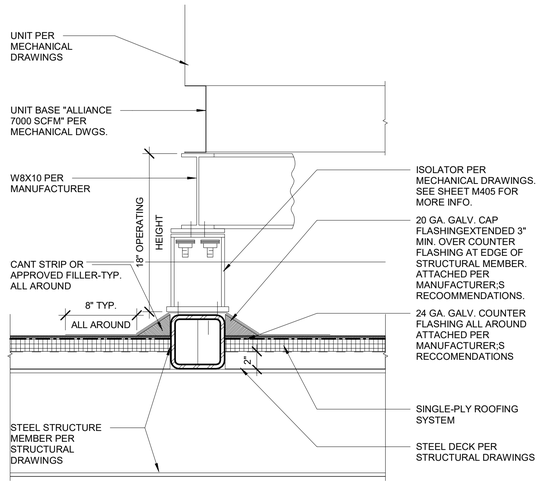

6 MECHANICAL ISOLATOR
1 1/2" = 1'-0"

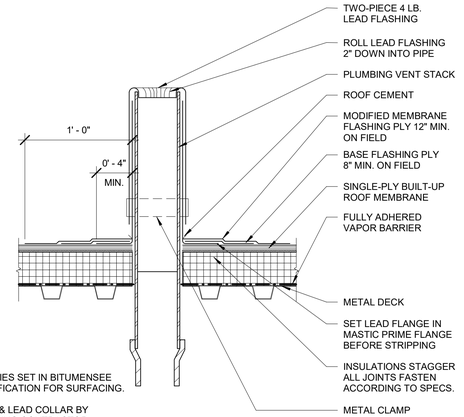

NOTE:
1. ALL PLIES SET IN BITUMENSEE SPECIFICATION FOR SURFACING.
2. SKIRT & LEAD COLLAR BY PLUMBING CONTRACTOR.

3 PLUMBING STACK
1 1/2" = 1'-0"

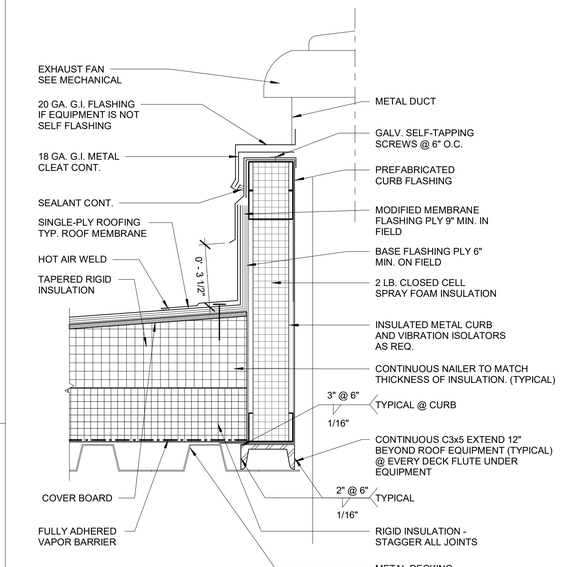

1 EXHAUST FAN CURB DETAIL
3" = 1'-0"

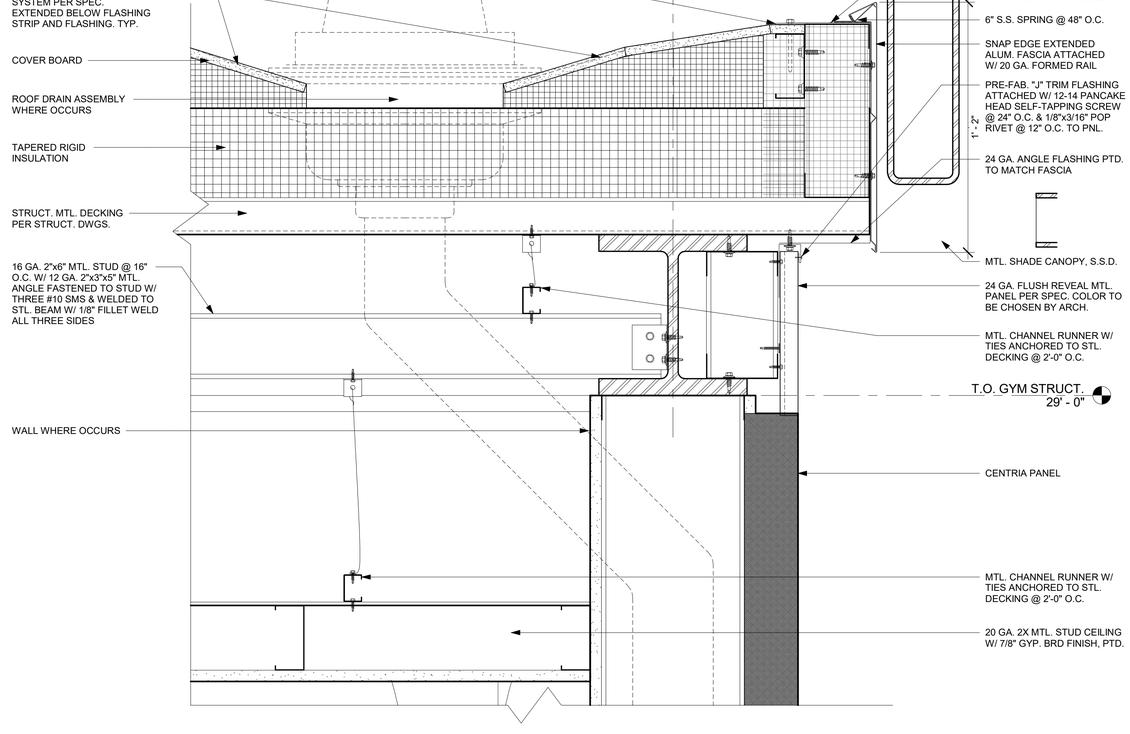

7 LOBBY ROOF NORTH FASCIA DETAIL
3" = 1'-0"

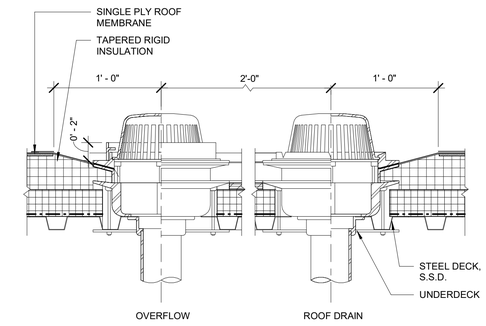

NOTE:
1" MINIMUM EXTENSION OF MEMBRANE BEYOND RING DECK CLAMP, SEE PLUMBING DRAWINGS.

4 ROOF AND OVERFLOW DRAIN DETAIL
1 1/2" = 1'-0"

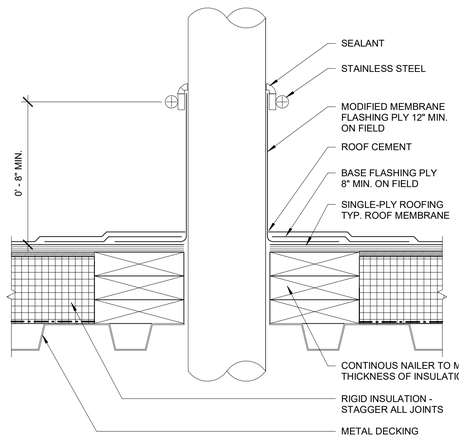

NOTE:
1. ALL PLIES SET IN BITUMEN, SEE SPECIFICATION FOR SURFACING.
2. SKIRT & LEAD COLLAR BY CONTRACTOR.

5 ROOF PENETRATION DETAIL
3" = 1'-0"

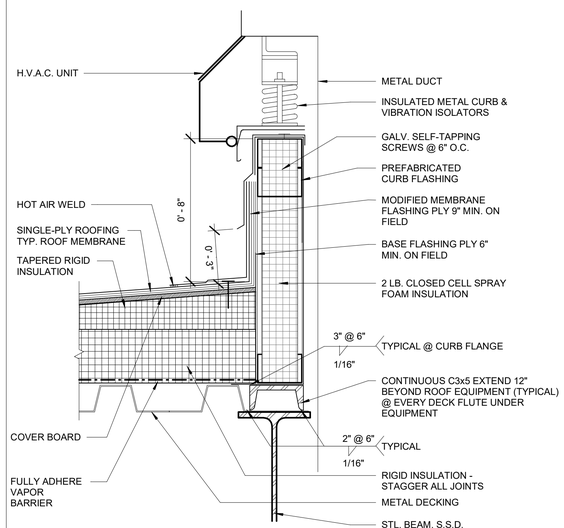

2 HVAC CURB DETAIL
3" = 1'-0"

BUREAU OF ENGINEERING
OFFICIAL RECORD

THE CITY OF LOS ANGELES OR ITS OFFICERS OR AGENTS SHALL NOT BE RESPONSIBLE FOR THE ACCURACY OR COMPLETENESS OF ELECTRONIC COPIES OF THIS PLAN SHEET.

FILE PATH: A360://Studio City Recreation Center/SCRC-Project Modal_Central_Final.rvt

SHEET ISSUE DATE: 10/18/17

REVISION DATES (DESIGN STAGE ONLY)

DEPARTMENT OF PUBLIC WORKS
CITY OF LOS ANGELES
BUREAU OF ENGINEERING
CITY OF LOS ANGELES ENGINEERING

NO.	REVISION DESCRIPTION	DATE	BY

BUILDING NO. -
INDEX NO. RP-300106

LICENSED ARCHITECT TED ALLEN C 23333 REGISTERED STATE OF CALIFORNIA

CITY ENGINEER DATE: 1-24-2019
ARCHITECTURAL DIVISION LIC. NO.: C 23333 1-24-2019
ARCHITECT: ROBERT LOMELIN 1-24-2019
DESIGNED BY: Z. AKHTER, M. CHAVARRIA, A. KIM, M. LAM 1-24-2019
DRAWN BY: Z. AKHTER, M. CHAVARRIA, A. KIM 1-24-2019
CHECKED BY: ROBERT LOMELIN 1-24-2019
APPROVED BY:MAHMOOD KARIMZADEH-AIA, DEPUTY CITY ENGINEER 1-24-2019

TED ALLEN, PE

CLIENT: DEPARTMENT OF RECREATION AND PARKS
GENERAL MANAGER: MICHAEL A. SHULL

SHEET TITLE: ROOF DETAILS

PROJECT: STUDIO CITY RECREATION CENTER

ADDRESS: 12621 RYE STREET, STUDIO CITY, CA 91604

WORK ORDER NO. E170267B
PLAN FILE NO. 860
DRAWING NO. A632
SHEET 100 OF SHEETS 211

PLOTTED:7/1/2019 11:32:34 AM

THE CITY OF LOS ANGELES OR ITS OFFICERS OR AGENTS SHALL NOT BE RESPONSIBLE FOR THE ACCURACY OR COMPLETENESS OF ELECTRONIC COPIES OF THIS PLAN SHEET.

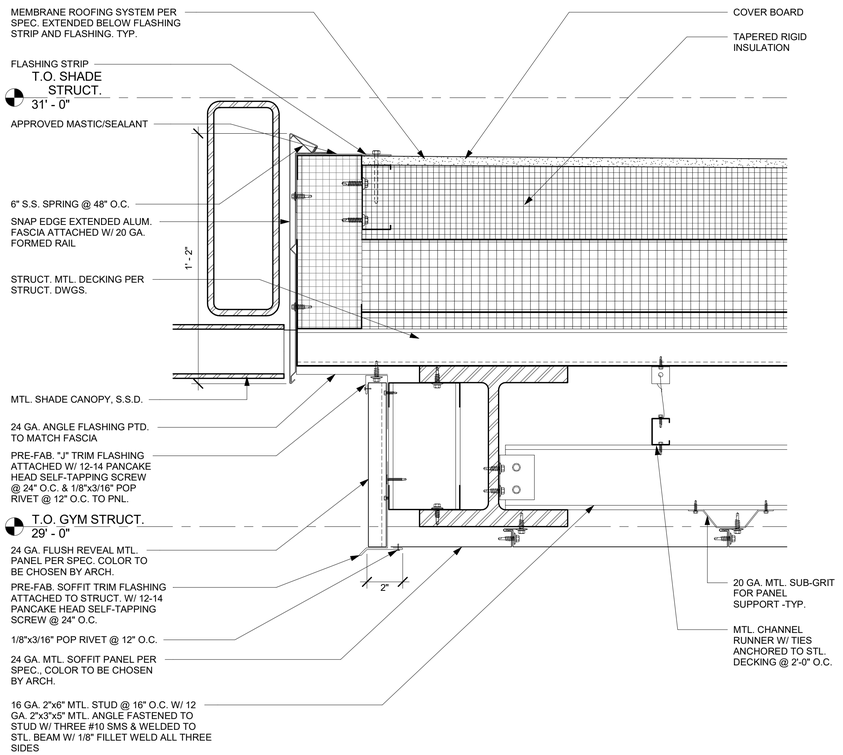

3 LOBBY ROOF SOUTH FASCIA DETAIL
3" = 1'-0"

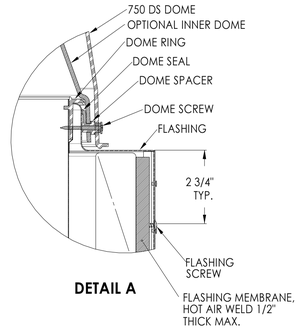

DETAIL A

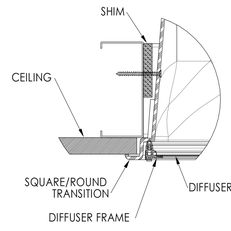

DETAIL B

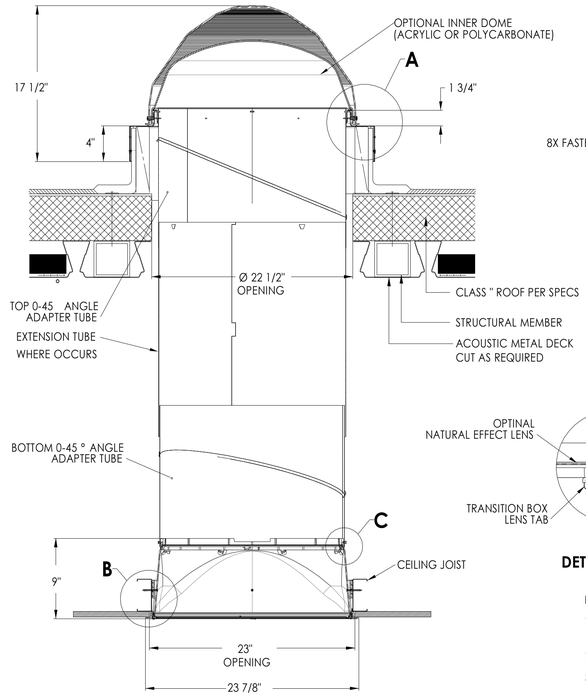

FULL SECTION

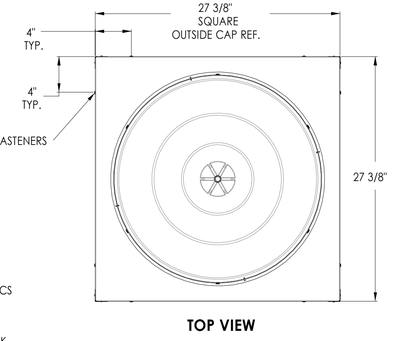

TOP VIEW

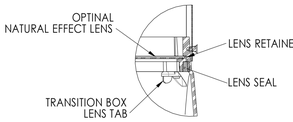

DETAIL C

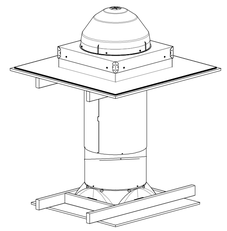

NOTES:

1. STRUCTURAL ELEMENTS (PLYWOOD, RAFTERS, DRYWALL ETC.) BY OTHERS & SHOWN FOR REFERENCE ONLY.
2. ALL TUBE JOINTS & SEAMS TAPED WITH 2" FOIL TAPE (NOT SHOWN).
3. DIMENSIONS IN BRACKETS ARE METRIC UNLESS OTHERWISE SPECIFIED.
4. 6" MIN CLEARANCE SHOULD BE MAINTAINED FROM ALL SOLATUBE COMPONENTS AND OTHER PLENUM COMPONENTS.

1 SOLATUBE 750DS TYPICAL DETAIL
1 1/2" = 1'-0"

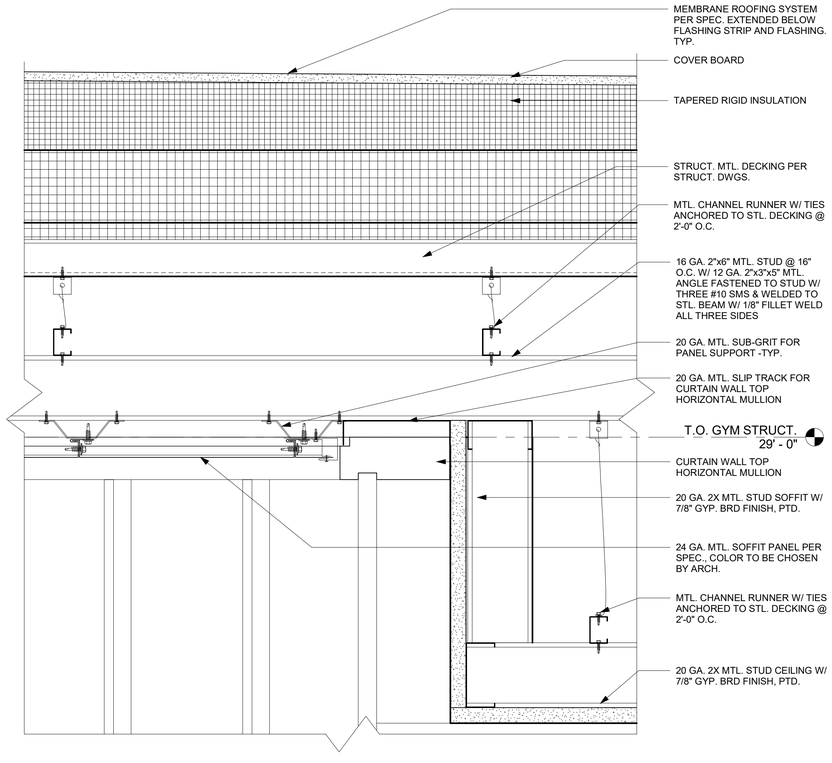

4 T.O. LOBBY CURTAIN WALL DETAIL
3" = 1'-0"

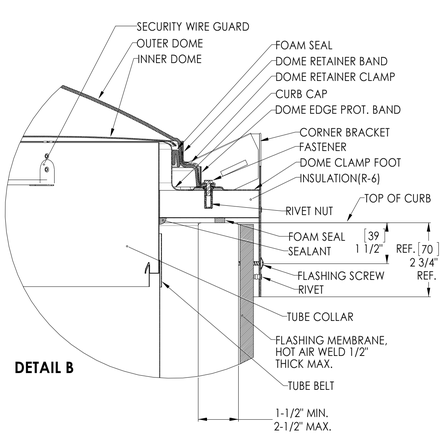

DETAIL B

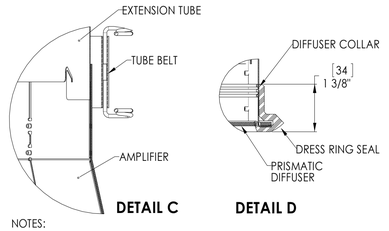

DETAIL C **DETAIL D**

NOTES:

1. 6" MIN CLEARANCE SHOULD BE MAINTAINED FROM ALL SOLATUBE COMPONENTS AND OTHER PLENUM COMPONENTS.
2. CURB CORNER TO CORNER MEASUREMENT SHALL BE EQUIVALENT TO WITHIN 3/32".

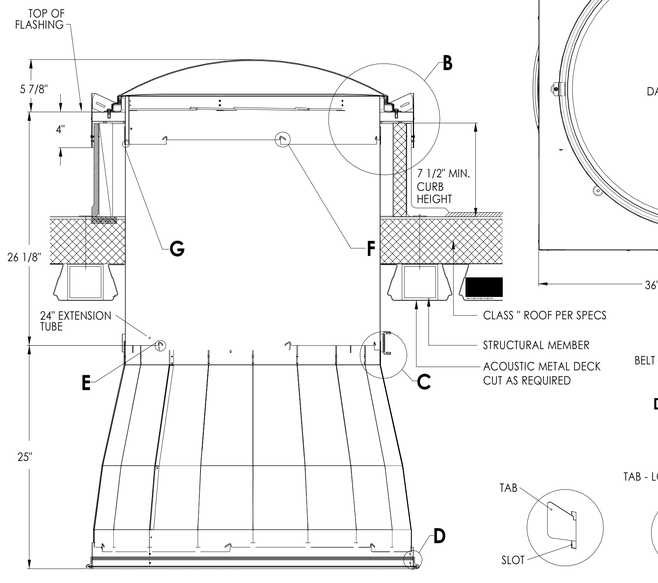

SECTION A-A

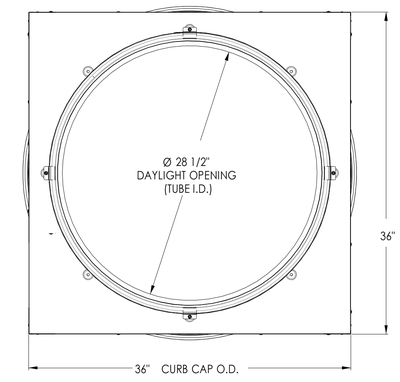

DETAIL G

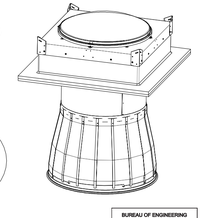

DETAIL E

DETAIL F

2 SOLATUBE M74DS TYPICAL DETAILS
1 1/2" = 1'-0"

BUREAU OF ENGINEERING
OFFICIAL RECORD

DEPARTMENT OF PUBLIC WORKS
BUREAU OF ENGINEERING
CITY OF LOS ANGELES ENGINEERING
CITY OF LOS ANGELES

NO.	REVISION DESCRIPTION	DATE	BY

BUILDING NO. -
INDEX NO. RP-300106

LICENSED ARCHITECT TED ALLEN LOMITA CALIFORNIA No. 23333 RENEWAL 08/31/2020 STATE OF CALIFORNIA

CITY ENGINEER	DATE:
TED ALLEN, PE	1-24-2019
ARCHITECTURAL DIVISION	LIC. NO.: C 23333
ARCHITECT: ROBERT LOMELIN	
DESIGNED BY: Z. AKHTER, M. CHAVARRIA, A. KIM, M. LAM	1-24-2019
DRAWN BY: Z. AKHTER, M. CHAVARRIA, A KIM	1-24-2019
CHECKED BY: ROBERT LOMELIN	1-24-2019
APPROVED BY:MAHMOOD KARIMZADEH,AIA, DEPUTY CITY ENGINEER	1-24-2019

CLIENT: DEPARTMENT OF RECREATION AND PARKS
GENERAL MANAGER: MICHAEL A. SHULL

SHEET TITLE: ROOF DETAILS

PROJECT: STUDIO CITY RECREATION CENTER

ADDRESS: 12621 RYE STREET, STUDIO CITY, CA 91604

WORK ORDER NO. E170267B
PLAN FILE NO. 860
DRAWING NO. A633
SHEET 101 OF SHEETS 211

REVISION DATES (DESIGN STAGE ONLY)

FILE PATH: A360://Studio City Recreation Center/SCRC-Project Model_Central_Final.rvt
SHEET ISSUE DATE: 03/02/18
PLOTTED:7/1/2019 11:32:39 AM

THE CITY OF LOS ANGELES OR ITS OFFICERS OR AGENTS SHALL NOT BE RESPONSIBLE FOR THE ACCURACY OR COMPLETENESS OF ELECTRONIC COPIES OF THIS PLAN SHEET.

FILE PATH: A360://Studio City Recreation Center/SCRC-Project Model_Central_Final.rvt

SHEET ISSUE DATE: 10/10/17

REVISION DATES (DESIGN STAGE ONLY)

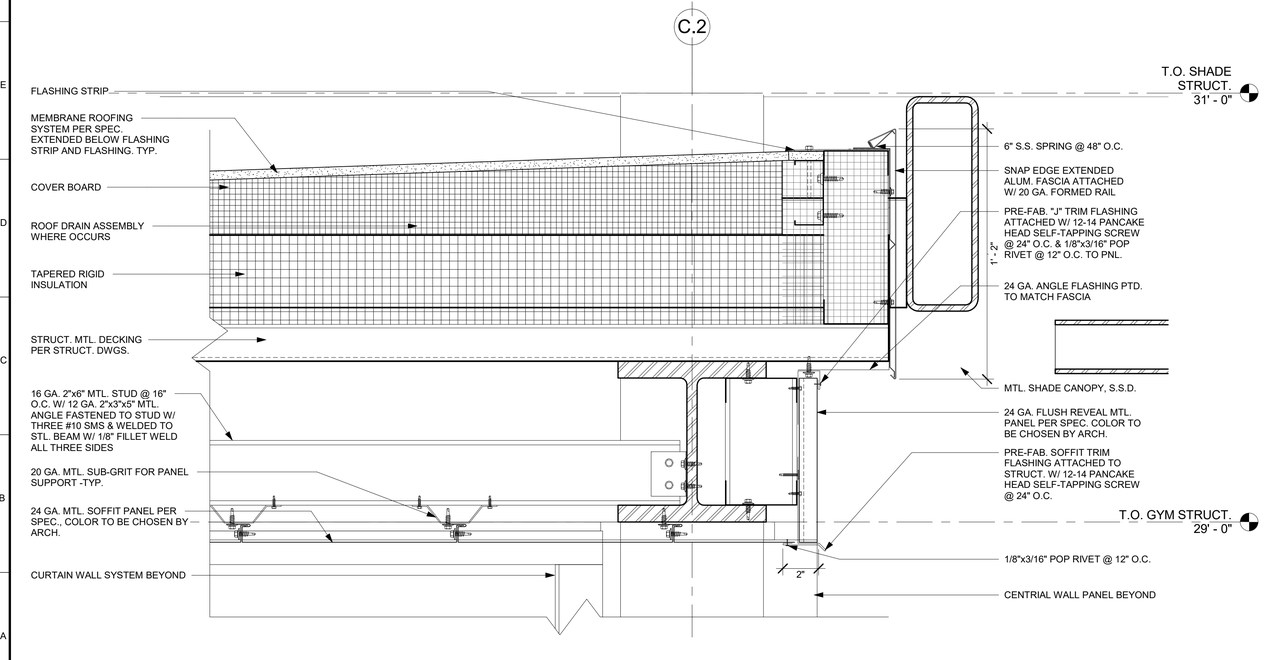

3 LOBBY ROOF NORTH FASCIA DETAIL
3" = 1'-0"

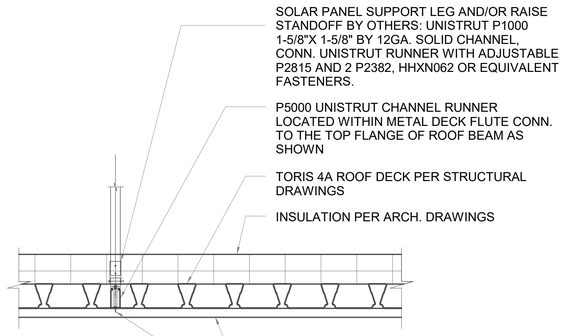

NOTE:
SOLAR PANEL SUPPORT LEGS AND/OR RAISE STANDOFF SHALL ASSUMED TO BE SIMPLY CONNECTED TO THE RUNNER WITH NO BENDING AND/OR ROTATIONAL RIGIDITY.

1 SOLAR PANEL CONNECTION
1" = 1'-0"

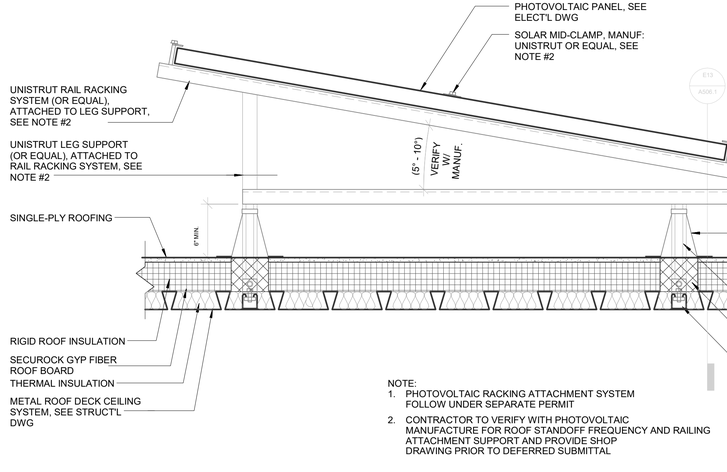

NOTE:
1. PHOTOVOLTAIC RACKING ATTACHMENT SYSTEM FOLLOW UNDER SEPARATE PERMIT
2. CONTRACTOR TO VERIFY WITH PHOTOVOLTAIC MANUFACTURE FOR ROOF STANDOFF FREQUENCY AND RAILING ATTACHMENT SUPPORT AND PROVIDE SHOP DRAWING PRIOR TO DEFERRED SUBMITTAL

2 SOLAR PANEL CONNECTION DETAIL
1 1/2" = 1'-0"

BUREAU OF ENGINEERING
OFFICIAL RECORD

BUREAU OF ENGINEERING

NO.	REVISION DESCRIPTION	DATE	BY

BUILDING NO. -

INDEX NO. **RP-300106**

ENGINEERING
CITY OF LOS ANGELES

LICENSED ARCHITECT TED ALLEN LIC. NO. C 23333 REGISTRATION CALIFORNIA STATE OF CALIFORNIA

DEPARTMENT OF PUBLIC WORKS

CITY OF LOS ANGELES

CITY ENGINEER		DATE:
ARCHITECTURAL DIVISION	TED ALLEN, PE	LIC. NO.: C 23333
ARCHITECT: ROBERT LOMELIN		1-24-2019
DESIGNED BY: Z. AKHTER, M. CHAVARRIA, A. KIM, M. LAM		1-24-2019
DRAWN BY: Z. AKHTER, M. CHAVARRIA, A KIM		1-24-2019
CHECKED BY: ROBERT LOMELIN		1-24-2019
APPROVED BY:MAHMOOD KARIMZADEH,AIA, DEPUTY CITY ENGINEER		1-24-2019

CLIENT: DEPARTMENT OF RECREATION AND PARKS
GENERAL MANAGER: MICHAEL A. SHULL

SHEET TITLE: ROOF DETAIL- SOLAR PANEL

PROJECT: STUDIO CITY RECREATION CENTER

ADDRESS: 12621 RYE STREET, STUDIO CITY, CA 91604

WORK ORDER NO. E170267B

PLAN FILE NO. 860

DRAWING NO. A634

SHEET 102 OF SHEETS 211

PLOTTED:7/1/2019 11:32:44 AM

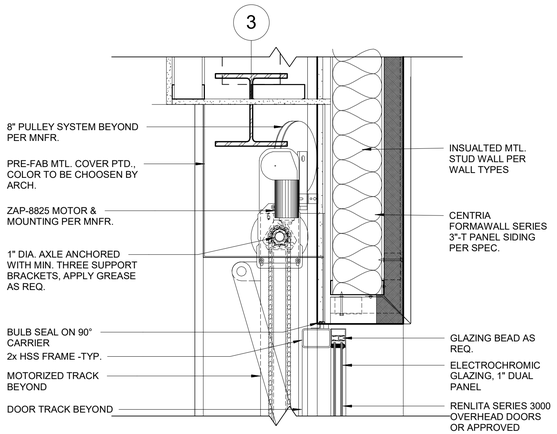

10 OVERHEAD FOLDING DOOR- HEAD
1 1/2" = 1'-0"

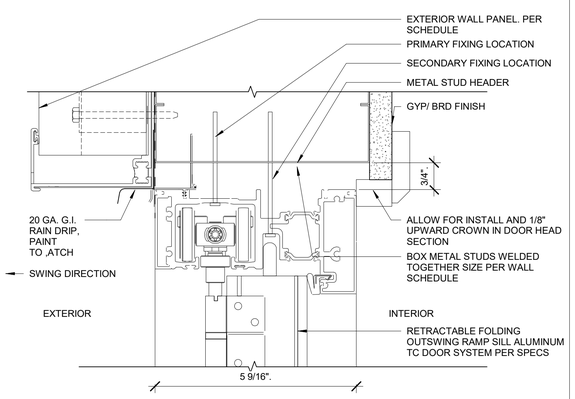

7 RETRACTABLE DOOR - HEAD
6" = 1'-0"

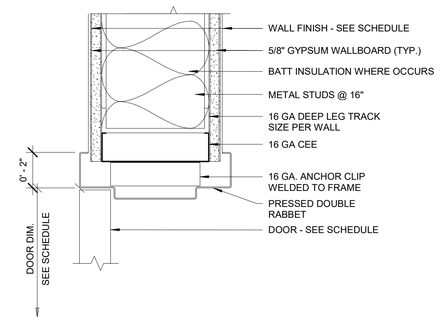

INTERIOR DOOR HEAD DETAIL - STUD WALL
4 3" = 1'-0"

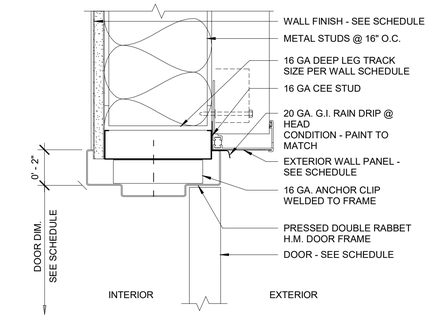

EXTERIOR DOOR HEAD DETAIL - STUD WALL- CENTRIA
1 3" = 1'-0"

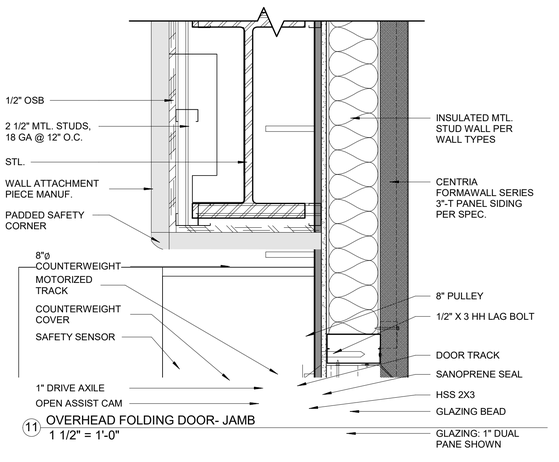

11 OVERHEAD FOLDING DOOR- JAMB
1 1/2" = 1'-0"

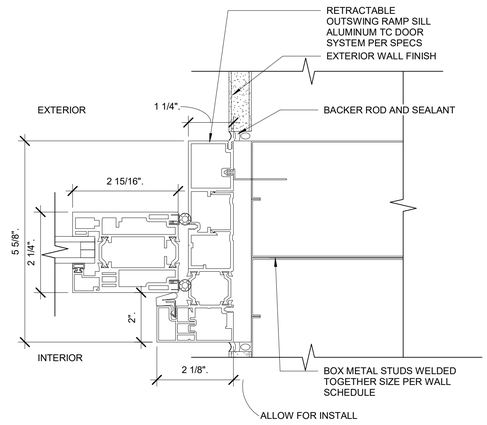

8 RETRACTABLE DOOR - JAMB
6" = 1'-0"

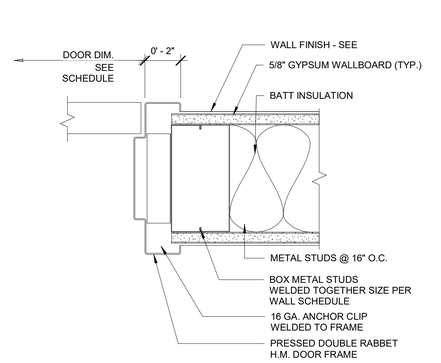

INTERIOR DOOR JAMB DETAIL - STUD WALL
5 3" = 1'-0"

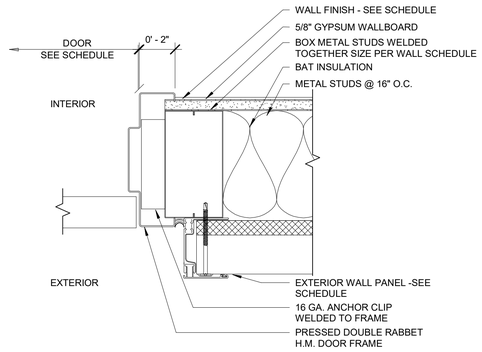

EXTERIOR DOOR JAMB DETAIL - STUD WALL-CENTRIA
2 3" = 1'-0"

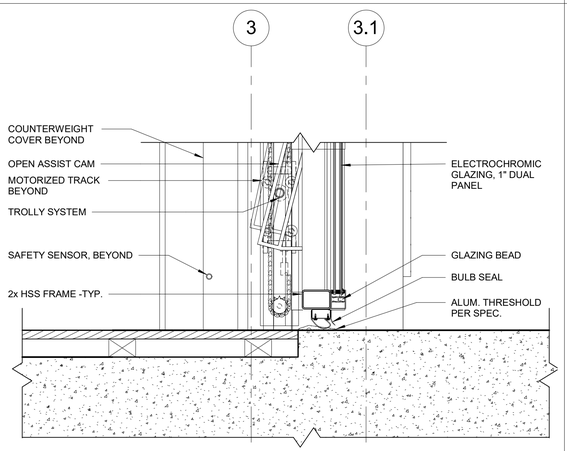

12 OVERHEAD FOLDING DOOR- SILL
1 1/2" = 1'-0"

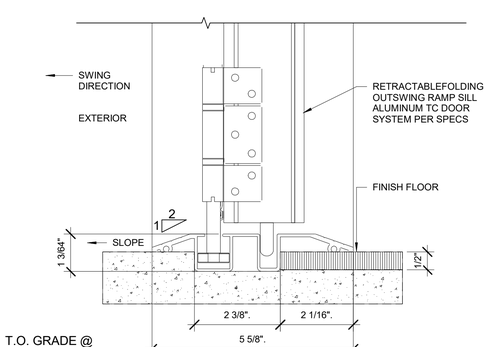

9 RETRACTABLE DOOR SILL
6" = 1'-0"

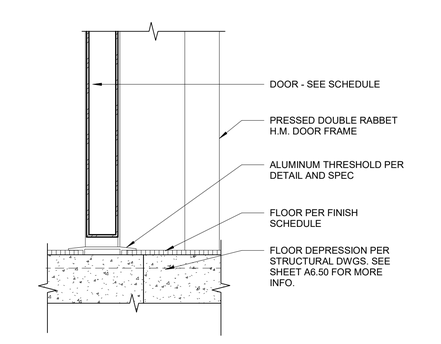

INTERIOR DOOR THRESHOLD DETAIL - STUD WALL
6 3" = 1'-0"

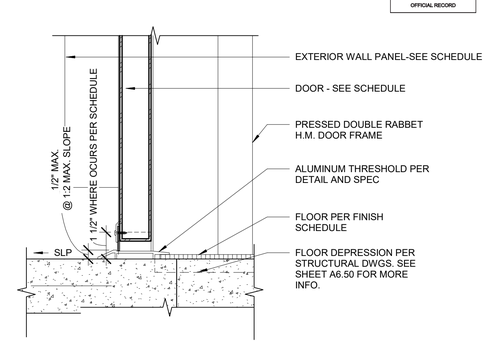

EXTERIOR DOOR THRESHOLD DETAIL - STUD WALL
3 3" = 1'-0"

THE CITY OF LOS ANGELES OR ITS OFFICERS OR AGENTS SHALL NOT BE RESPONSIBLE FOR THE ACCURACY OR COMPLETENESS OF ELECTRONIC COPIES OF THIS PLAN SHEET.

FILE PATH: A360://Studio City Recreation Center/SCRC-Project Model_Central_Final.rvt

SHEET ISSUE DATE: 10/10/17

REVISION DATES (DESIGN STAGE ONLY)

DEPARTMENT OF PUBLIC WORKS
BUREAU OF ENGINEERING
CITY OF LOS ANGELES
ENGINEERING

NO.	REVISION DESCRIPTION	DATE	BY

BUILDING NO. -

INDEX NO. RP-300106

LICENSED ARCHITECT TED ALLEN C. 23333 RENEWAL 08/31/2019 STATE OF CALIFORNIA

CITY ENGINEER	DATE:
ARCHITECTURAL DIVISION	LIC. NO.: C 23333
ARCHITECT: ROBERT LOMELIN	1-24-2019
DESIGNED BY: Z. AKHTER, M. CHAVARRIA, A. KIM, M. LAM	1-24-2019
DRAWN BY: Z. AKHTER, M. CHAVARRIA, A. KIM	1-24-2019
CHECKED BY: ROBERT LOMELIN	1-24-2019
APPROVED BY:MAHMOOD KARIMZADEH,AIA, DEPUTY CITY ENGINEER	1-24-2019

TED ALLEN, PE

CITY OF LOS ANGELES

CLIENT: DEPARTMENT OF RECREATION AND PARKS
GENERAL MANAGER: MICHAEL A. SHULL

SHEET TITLE: DOOR DETAIL

PROJECT: STUDIO CITY RECREATION CENTER

ADDRESS: 12621 RYE STREET, STUDIO CITY, CA 91604

BUREAU OF ENGINEERING OFFICIAL RECORD

WORK ORDER NO. E170267B

PLAN FILE NO. 860

DRAWING NO. A640

SHEET 103 OF SHEETS 211

PLOTTED:7/1/2019 11:32:50 AM

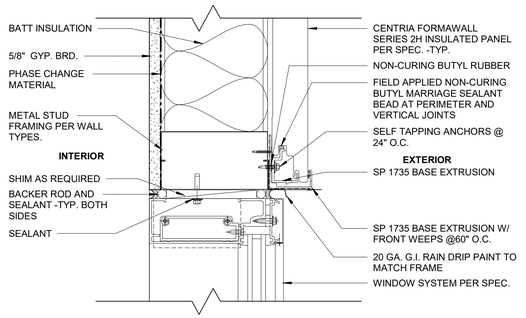

6 HEAD CENTRIA 2"
3" = 1'-0"

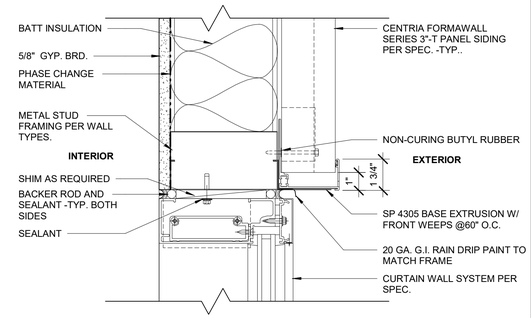

3 CLERESTORY HEAD CENTRIA 3"
3" = 1'-0"

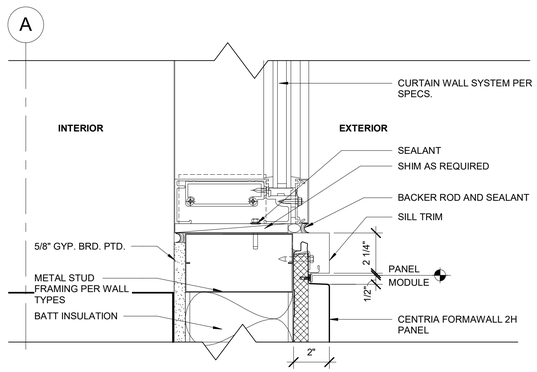

4 CLERESTORY SILL CENTRIA 2"
3" = 1'-0"

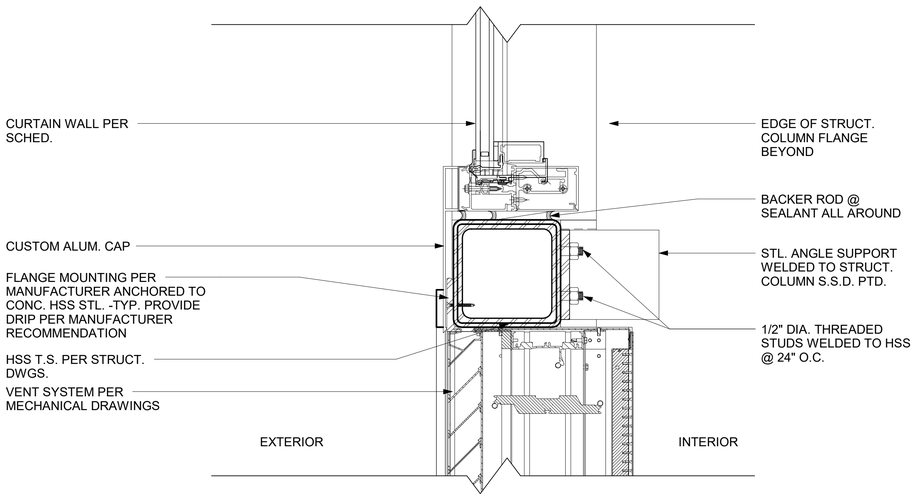

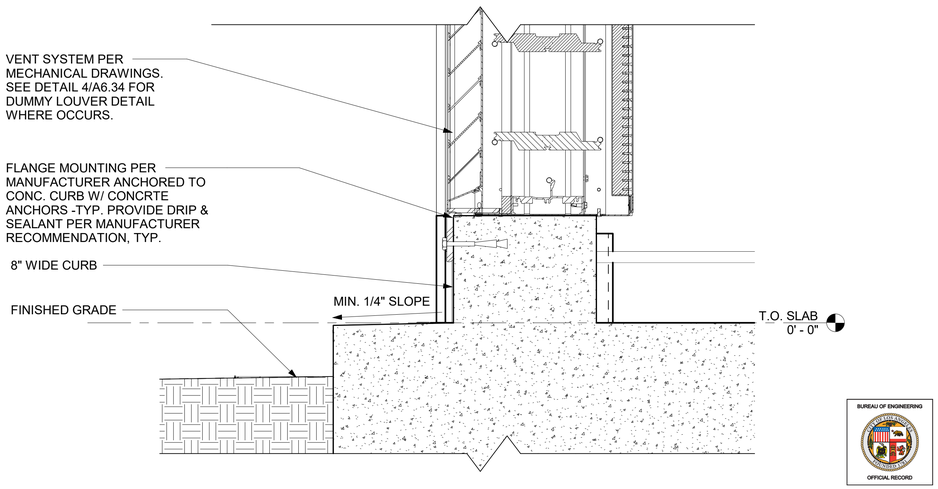

1 NATURAL VENTILATION DETAIL
3" = 1'-0"

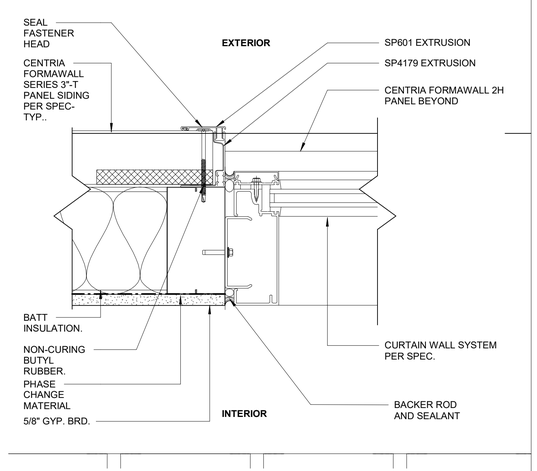

5 CLERESTORY JAMB CENTRIA 3"
3" = 1'-0"

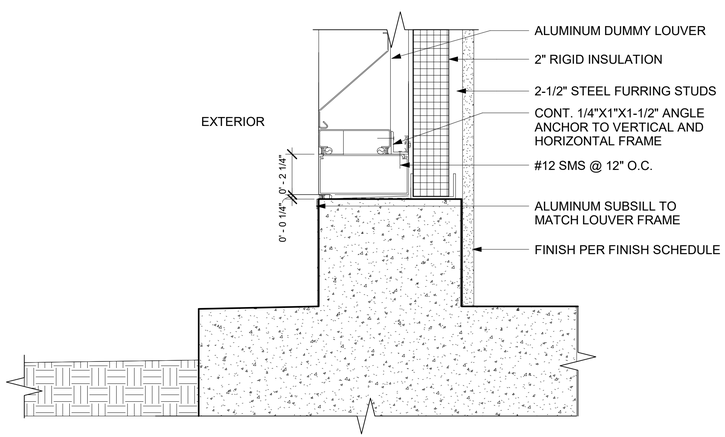

2 DUMMY LOUVER TYPICAL DETAIL
3" = 1'-0"

THE CITY OF LOS ANGELES OR ITS OFFICERS OR AGENTS SHALL NOT BE RESPONSIBLE FOR THE ACCURACY OR COMPLETENESS OF ELECTRONIC COPIES OF THIS PLAN SHEET.

FILE PATH: A360://Studio City Recreation Center/SCRC-Project Model_Central_Final.rvt

SHEET ISSUE DATE: 10/10/17

REVISION DATES (DESIGN STAGE ONLY)

BUREAU OF ENGINEERING
ENGINEERING
CITY OF LOS ANGELES

NO.	REVISION DESCRIPTION	DATE	BY

INDEX NO. RP-300106
BUILDING NO. -

LICENSED ARCHITECT TED ALLEN C. 23333 RENEWAL 08/31/2019 STATE OF CALIFORNIA

DEPARTMENT OF PUBLIC WORKS
CITY OF LOS ANGELES

CITY ENGINEER	TED ALLEN, PE		
ARCHITECTURAL DIVISION		DATE:	1-24-2019
ARCHITECT: ROBERT LOMELIN	LIC. NO.: C 23333		1-24-2019
DESIGNED BY:	Z. AKHTER, M. CHAVARRIA, A. KIM, M. LAM		1-24-2019
DRAWN BY:	Z. AKHTER, M. CHAVARRIA, A. KIM		1-24-2019
CHECKED BY:	ROBERT LOMELIN		1-24-2019
APPROVED BY:	MAHMOOD KARIMZADEH,AIA, DEPUTY CITY ENGINEER		1-24-2019

CLIENT: DEPARTMENT OF RECREATION AND PARKS
GENERAL MANAGER: MICHAEL A. SHULL

SHEET TITLE: WINDOW DETAIL

PROJECT: STUDIO CITY RECREATION CENTER

ADDRESS: 12621 RYE STREET, STUDIO CITY, CA 91604

BUREAU OF ENGINEERING OFFICIAL RECORD

WORK ORDER NO. E170267B
PLAN FILE NO. 860
DRAWING NO. A641
SHEET 104 OF SHEETS 211

PLOTTED:7/1/2019 11:32:56 AM

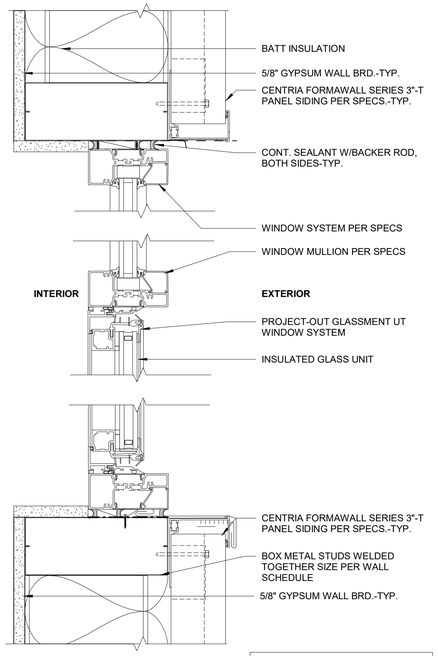

SEE SHEET A602 FOR ADDITIONAL FORMAWALL CENTRIA 3"-T PANEL SIDING INFORMATION.

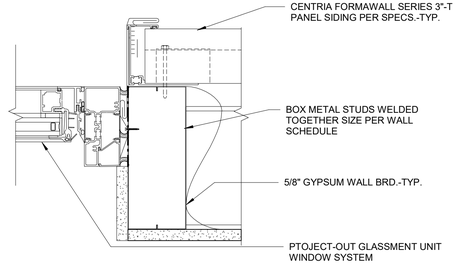

STOREFRONT WITH PROJECT-OUT WINDOW
3 3" = 1'-0"

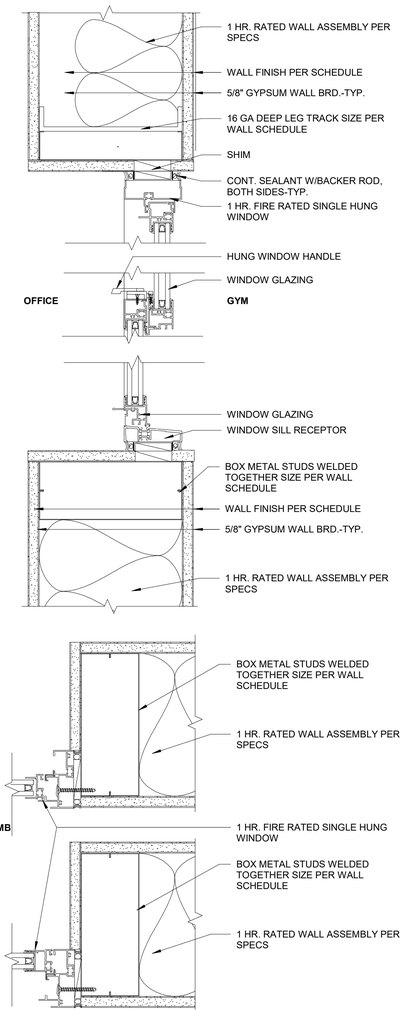

2 HUNG WINDOW DETAIL
3" = 1'-0"

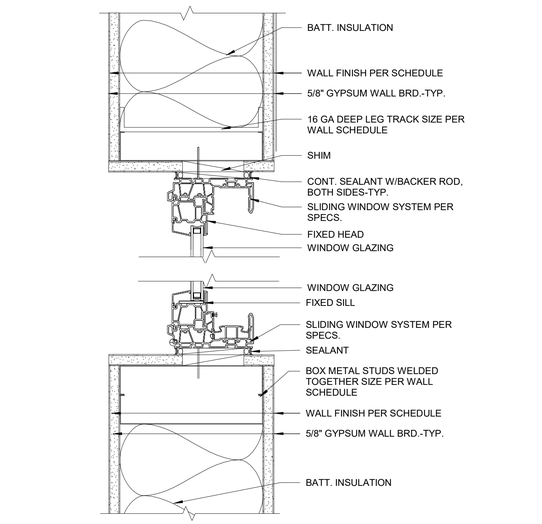

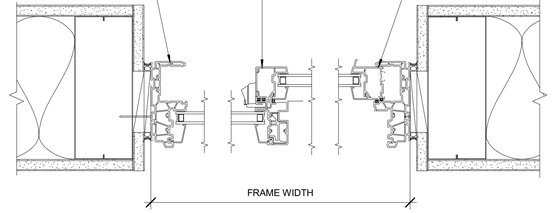

1 SLIDING WINDOW DETAILS
3" = 1'-0"

THE CITY OF LOS ANGELES OR ITS OFFICERS OR AGENTS SHALL NOT BE RESPONSIBLE FOR THE ACCURACY OR COMPLETENESS OF ELECTRONIC COPIES OF THIS PLAN SHEET.

FILE PATH: A360://Studio City Recreation Center/SCRC-Project Model_Central_Final.rvt

SHEET ISSUE DATE: 03/03/18

REVISION DATES (DESIGN STAGE ONLY)

BUREAU OF ENGINEERING
OFFICIAL RECORD

CITY OF LOS ANGELES
DEPARTMENT OF PUBLIC WORKS
BUREAU OF ENGINEERING

ENGINEERING
CITY OF LOS ANGELES

NO.	REVISION DESCRIPTION	DATE	BY

BUILDING NO. -

INDEX NO. RP-300106

LICENSED ARCHITECT LOMELIN C-23333 REGISTRATION STATE OF CALIFORNIA

CITY ENGINEER		
TED ALLEN, PE	DATE:	
ARCHITECTURAL DIVISION		
ARCHITECT: ROBERT LOMELIN	LIC. NO.: C 23333	1-24-2019
DESIGNED BY: Z. AKHTER, M. CHAVARRIA, A. KIM, M. LAM		1-24-2019
DRAWN BY: Z. AKHTER, M. CHAVARRIA, A. KIM		1-24-2019
CHECKED BY: ROBERT LOMELIN		1-24-2019
APPROVED BY:MAHMOOD KARIMZADEH,AIA, DEPUTY CITY ENGINEER		1-24-2019

CLIENT: DEPARTMENT OF RECREATION AND PARKS
GENERAL MANAGER: MICHAEL A. SHULL

SHEET TITLE: WINDOW DETAILS

PROJECT: STUDIO CITY RECREATION CENTER

ADDRESS: 12621 RYE STREET, STUDIO CITY, CA 91604

WORK ORDER NO. E170267B
PLAN FILE NO. 860
DRAWING NO. A642
SHEET 105 OF SHEETS 211

PLOTTED:7/1/2019 11:33:01 AM

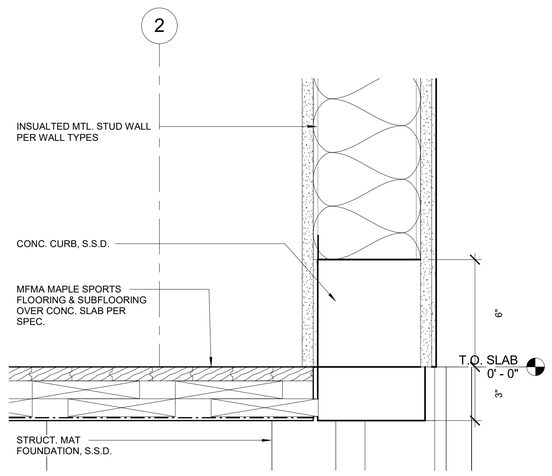

7 GYM/COMM. RM WOOD FLOOR DETAIL
3" = 1'-0"

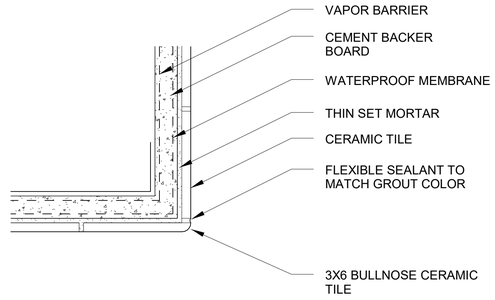

5 CERAMIC TILE @ OUTSIDE CORNER
6" = 1'-0"

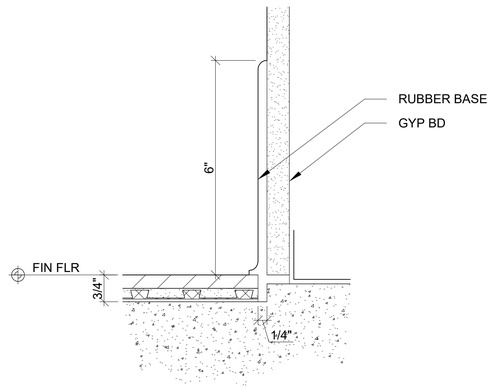

3 RUBBER BASE
6" = 1'-0"

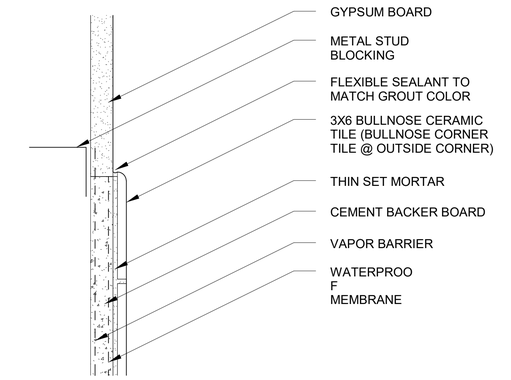

1 TOP OF WALL TILE
6" = 1'-0"

6 CERAMIC TILE @ INSIDE CORNER
6" = 1'-0"

4 CERAMIC FLOOR TILE TO CONCRETE BASE
6" = 1'-0"

2 CERAMIC TILE TO WOOD FLOOR TRANSITION @ LOBBY/GYMNASIUM
6" = 1'-0"

BUREAU OF ENGINEERING
OFFICIAL RECORD

THE CITY OF LOS ANGELES OR ITS OFFICERS OR AGENTS SHALL NOT BE RESPONSIBLE FOR THE ACCURACY OR COMPLETENESS OF ELECTRONIC COPIES OF THIS PLAN SHEET.

FILE PATH: A360://Studio City Recreation Center/SCRC-Project Model_Central_Final.rvt

SHEET ISSUE DATE: 10/10/17

REVISION DATES (DESIGN STAGE ONLY)

DEPARTMENT OF PUBLIC WORKS
BUREAU OF ENGINEERING
ENGINEERING
CITY OF LOS ANGELES

NO.	REVISION DESCRIPTION	DATE	BY

BUILDING NO. -

INDEX NO. RP-300106

LICENSED ARCHITECT CONNIE M. LOMELIN C. 23333 REGISTERED STATE OF CALIFORNIA

CITY ENGINEER	DATE:
TED ALLEN, PE	
ARCHITECTURAL DIVISION	
ARCHITECT: ROBERT LOMELIN LIC. NO.: C 23333	1-24-2019
DESIGNED BY: Z. AKHTER, M. CHAVARRIA, A. KIM, M. LAM	1-24-2019
DRAWN BY: Z. AKHTER, M. CHAVARRIA, A. KIM	1-24-2019
CHECKED BY: ROBERT LOMELIN	1-24-2019
APPROVED BY:MAHMOOD KARIMZADEH AIA, DEPUTY CITY ENGINEER	1-24-2019

CITY OF LOS ANGELES
DEPARTMENT OF RECREATION AND PARKS

CLIENT: DEPARTMENT OF RECREATION AND PARKS
GENERAL MANAGER: MICHAEL A. SHULL

SHEET TITLE: FLOOR DETAIL

PROJECT: STUDIO CITY RECREATION CENTER

ADDRESS: 12621 RYE STREET, STUDIO CITY, CA 91604

WORK ORDER NO. E170267B

PLAN FILE NO. 860

DRAWING NO. A650

SHEET 106 OF SHEETS 211

PLOTTED:7/1/2019 11:33:06 AM

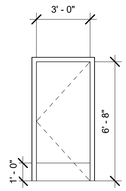

A
FLUSH SINGLE/
KICKPLATE BOTH
SIDES AND OR
LOUVERS WHERE
OCCURS

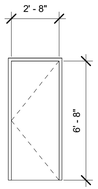

A1
FLUSH SINGLE
(RESTROOMS)

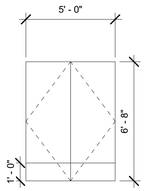

B
FLUSH DOUBLE-
DOUBLE ACTING/
KICKPLATE BOTH
SIDES

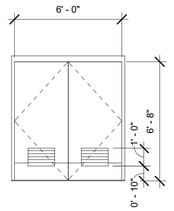

B1
FLUSH DOUBLE/
KICKPLATE BOTHS SIDES
AND OR LOUVERS
WHERE OCCURS

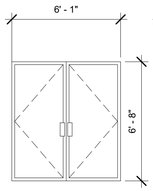

B2
FLUSH DOUBLE
STOREFRONT

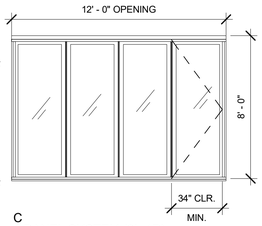

C
4 PANEL SYSTEM (3L-1R)
W/ ONE ADA COMPLAINT DOOR PANEL

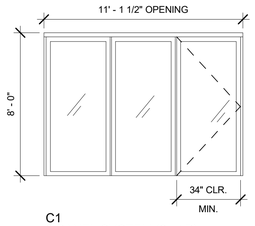

C1
3 PANEL SYSTEM (2L-1R)
W/ ONE ADA COMPLAINT DOOR PANEL

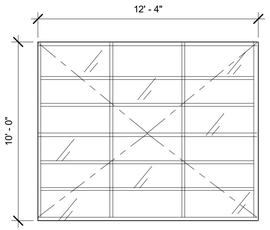

D
MOTORIZED OVERHEAD
FOLD - GLAZED

DOOR TYPES
1/4" = 1'-0"

DOOR SCHEDULE

NO.	TYPE	DOOR DIMENSIONS WIDTH	HEIGHT	THICKNESS	DOOR MATERIAL	DOOR FINISH	DOOR CORE	FRAME MATERIAL	FRAME FINISH	1/4" TEMP. GL	DETAILS SHEET NO. HEAD	JAMB	HDWE SEC 08710	THRESHOLD	LOUVER	KICK PLATE	REMARKS
100A	B2	6' - 1"	6' - 10 1/2"	0' - 2"										Yes			
100B	B2	6' - 2 1/4"	6' - 10 1/2"	0' - 2"										Yes			
100C	B2	6' - 0"	6' - 10 1/2"	0' - 2"							3A/A601	3DA601	SET#1	Yes			,DOUUBLE STOREFRONT DOORS/ PANIC HARDWARE AND LOCKING MECHANISM
101	A	3' - 0"	6' - 8"	0' - 1 3/4"	HM	PF	SC	HM	PF		4/A633	5/A633	SET#100	Yes	No	Yes	5,SINGLE DOOR/ PANIC HARDWARE AND LOCKING MECHANISM
102	A	3' - 0"	6' - 8"	0' - 1 3/4"	HM	PF	SC	HM	PF		4/A633	5/A633	SET#101	Yes	Yes	Yes	7
103	A	3' - 0"	6' - 8"	0' - 1 3/4"	HM	PF	SC	HM	PF		4/A633	5/A633	SET#102	Yes	No	Yes	4,SINGLE DOOR/ LOCKING MECHANISM
104A	D	12' - 4"	10' - 0"	0' - 2"	M	PF	SC	M	PF	Yes			SET#2	Yes			2
104B	D	12' - 4"	10' - 0"	0' - 2"	M	PF	SC	M	PF	Yes			SET#2	Yes			2
104C	B1	6' - 0"	6' - 8"	0' - 1 3/4"	HM	PF	SC	HM	PF		4/A633	5/A633	SET#103	Yes		Yes	4,DOUBLE DOORS/ PANIC HARDWARE AND LOCKING MECHANISM
104D	B1	6' - 0"	6' - 8"	0' - 1 3/4"	HM	PF	SC	HM	PF		4/A633	5/A633	SET#103	Yes		Yes	4,DOUBLE DOORS/ PANIC HARDWARE AND LOCKING MECHANISM
104E	A	3' - 0"	6' - 8"	0' - 1 3/4"	HM	PF	SC	HM	PF		4/A633	5/A633	SET#104	Yes		Yes	4,5, SINGLE DOOR/ LOCKING MECHANISM
104F	B2	6' - 1"	7' - 0 1/2"	0' - 2"							3A/A601	3DA601	SET#3	Yes			,DOUUBLE STOREFRONT DOORS/ PANIC HARDWARE AND LOCKING MECHANISM
104G	B2	6' - 1"	7' - 0 1/2"	0' - 2"							3A/A601	3DA601	SET#3	Yes			,DOUUBLE STOREFRONT DOORS/ PANIC HARDWARE AND LOCKING MECHANISM
104H	B2	6' - 1"	7' - 0 1/2"	0' - 2"							3A/A601	3DA601	SET#3	Yes			,DOUUBLE STOREFRONT DOORS/ PANIC HARDWARE AND LOCKING MECHANISM
104I	B2	6' - 1"	7' - 0 1/2"	0' - 2"							3A/A601	3DA601	SET#3	Yes			,DOUUBLE STOREFRONT DOORS/ PANIC HARDWARE AND LOCKING MECHANISM
104K	B1	6' - 0"	6' - 8"	0' - 1 3/4"	HM	PF	SC	HM	PF				SET#4	Yes		Yes	4,DOUBLE DOORS/ PANIC HARDWARE AND LOCKING MECHANISM
105A	B1	6' - 0"	6' - 8"	0' - 1 3/4"	HM	PF	SC	HM	PF		1/A633	2/A633	SET#5	Yes	No	Yes	4,,DOUBLE DOOR/LOCKING MECHANISM, 1
105B	B	5' - 0"	6' - 8"	0' - 1 3/4"	HM	PF	SC	HM	PF				SET#105	Yes		Yes	4, 5, DOUBLE DOORS/LOCKING MECHANISM
106	A	3' - 0"	6' - 8"	0' - 1 3/4"	HM	PF	SC	HM	PF		1/A633	2/A633	SET#6	Yes	No	Yes	4,SINGLE DOOR/ LOCKING MECHANISM, 1
107	A	3' - 0"	6' - 8"	0' - 1 3/4"	HM	PF	SC	HM	PF		1/A633	2/A633	SET#6	Yes	No	Yes	4,SINGLE DOOR/ LOCKING MECHANISM, 1
108	A	3' - 0"	6' - 8"	0' - 1 3/4"	HM	PF	SC	HM	PF		1/A633	2/A633	SET#7	Yes	No	Yes	4,SINGLE DOOR/ LOCKING MECHANISM, 1
109	A	3' - 0"	6' - 8"	0' - 1 3/4"	HM	PF	SC	HM	PF		1/A633	2/A633	SET#7	Yes	No	Yes	4,SINGLE DOOR/ LOCKING MECHANISM, 1
200A	A	3' - 0"	6' - 8"	0' - 1 3/4"	HM	PF	SC	HM	PF		1/A633	2/A633	SET#8	Yes		Yes	4,SINGLE DOOR W/PANIC HARDWARE AND LOCKING MECHANISM, 1
200B	C	12' - 0"	8' - 0"	0' - 2 11/32"							7/A633	8/A633	SET#9	Yes			4 DOOR PANEL SYSTEM,W/ 1PANEL PANIC HARDWARE AND LOCKING MECHANISM, 6
200C	C1	11' - 1 1/2"	8' - 0"	0' - 2 11/32"							7/A633	8/A633	SET#9	Yes			3 DOOR PANEL SYSTEM, W/1 PANEL PANIC HARDWARE AND LOCKING MECHANISM, 6
200D	C	12' - 0"	8' - 0"	0' - 2 11/32"							7/A633	8/A633	SET#9	Yes			4 DOOR PANEL SYSTEM,W/ 1PANEL PANIC HARDWARE AND LOCKING MECHANISM, 6
201A	A	3' - 0"	6' - 8"	0' - 1 3/4"	HM	PF	SC	HM	PF		4/A633	5/A633	SET#108	Yes		Yes	4,5, SINGLE DOOR/ LOCKING MECHANISM
201B	A	3' - 0"	6' - 8"	0' - 1 3/4"	HM	PF	SC	HM	PF		1/A633	2/A633	SET#6	Yes		Yes	4,SINGLE DOOR/ LOCKING MECHANISM
202	A	3' - 0"	6' - 8"	0' - 1 3/4"	HM	PF	SC	HM	PF		4/A633	5/A633	SET#106	Yes	Yes	Yes	4,7, SINGLE DOOR/ LOCKING MECHANISM
203	A	3' - 0"	6' - 8"	0' - 1 3/4"	HM	PF	SC	HM	PF		4/A633	5/A633	SET#109	Yes	Yes	Yes	4, 5, 7, SINGLE DOOR/ LOCKING MECHANISM
205	A	3' - 0"	6' - 8"	0' - 1 3/4"	HM	PF	SC	HM	PF		4/A633	5/A633	SET#107	Yes	Yes	Yes	4, 5, 7, SINGLE DOOR/LOCKING MECHNANISM
206	A	3' - 0"	6' - 8"	0' - 1 3/4"	HM	PF	SC	HM	PF		4/A633	5/A633	SET#107	Yes	Yes	Yes	4,5, 7, SINGLE DOOR/LOCKING MECHNANISM
207	A	3' - 0"	6' - 8"	0' - 1 3/4"	HM	PF	SC	HM	PF		1/A633	2/A633	SET#6	Yes	Yes		4,7, SINGLE DOOR/ LOCKING MECHANISM
208	A1	2' - 10"	6' - 8"	0' - 1 3/4"	HM	PF	SC	HM	PF		1/A633	2/A633	SET#11	Yes	Yes		4,7, SINGLE DOOR/LOCKING MECHNANISM
209	A1	2' - 6 5/8"	6' - 8"	0' - 1 3/4"	HM	PF	SC	HM	PF		1/A633	2/A633	SET#10	Yes	Yes		4,7, SINGLE DOOR/LOCKING MECHNANIS
210	A1	2' - 6 5/8"	6' - 8"	0' - 1 3/4"	HM	PF	SC	HM	PF		1/A633	2/A633	SET#10	Yes	Yes		4,7, SINGLE DOOR/LOCKING MECHNANISM
211	A1	2' - 6 5/8"	6' - 8"	0' - 1 3/4"	HM	PF	SC	HM	PF		1/A633	2/A633	SET#10	Yes	Yes		4,7, SINGLE DOOR/LOCKING MECHNANISM
212	A	3' - 0"	6' - 8"	0' - 1 3/4"	HM	PF	SC	HM	PF		1/A633	2/A633	SET#12	Yes	Yes	Yes	4,7, SINGLE DOOR/LOCKING MECHNANISM

REMARKS

1. KICK PLATE TO BE NOTCHED WHERE LOUVERS EXIST
2. RENLITA "S-3000 SERIES" FOLDAWAY MOTORIZED OVERHEAD DOOR
3. 1 DOOR PANEL TO BE ADA COMPLIANT.
4. HOLLOW METAL DOOR TO BE INSULATED.
5. 1 HR. FIRE RATED DOOR AND FRAME
6. CUSTOM DOOR & FRAME FABRICATED FROM OPENING V.I.F.
7. METAL LOUVER MIN. CLEAR SPACE REQUIRED IS .2 SQ FT. SEE MECHANICAL FOR SIZE.
   LOUVER COLOR TO MATCH ADJACENT SURFACES

LEGEND

A	ALUMINUM	GL	GLASS	F	PAINT FINISH	ST	STEEL TUBE
AA	ANODIZED ALUMINUM	H	HANDLE	PH	PANIC HARDWAREPS	STF	STOREFRONT
AF	ALUMINUM FRAME	HC	HOLLOW CORE	PS	PRESSED STEEL	TG	TEMPERED GLASS
CD	CLOSER DEVICE	HM	HOLLOW METAL	SC	SOLID CORE	WD	WOOD
DP	DOUBLE PANE	KP	KICK PLATE	SF	STAIN FINISH	WS	WEATHER STRIP
FF	FACTORY FINISH	M	METAL	SP	SINGLE PANE		

NOTES

1. **ALL SECURITY OPENINGS SHALL COMPLY WITH DIVISION 67 OF THE LOS ANGELES CURRENT BUILDING CODE INCLUDING THE FOLLOWING:**
   - A. ALL PIN TYPE HINGES WHICH ARE ACCESSIBLE FROM OUTSIDE THE SECURED AREA WHEN THE DOOR IS CLOSED SHALL HAVE NON-REMOVABLE HINGE PINS.
   - B. DEADBOLTS SHALL CONTAIN HARDENED INSERTS.
   - C. STRAIGHT DEADBOLTS SHALL HAVE A MINUMUM THROW OF 1" AND AN EMBEDMENT OF 1/4".
   - D. A HOOK SHAPED OR AN EXPANDING LUG DEADBOLT SHALL HAVE A MINUMUM THROW OF 1/4".
   - E. CYLINDER GUARDS SHALL BE INSTALLED IN ALL CYLINDER LOCKS WHENEVER THE CYLINDER PROJECTS BEYOND THE FACE OF THE DOOR OR IS OTHERWISE ACCESSIBLE TO GRIPPING TOOLS.
   - F. ALL GLASS DOORS SHALL HAVE FULLY TEMPERED GLASS.
   - G. PROVIDE DEADLOCKING LATCH KEY OPERATED LOCKS ON EXTERIOR.
   - H. ALL GLAZING WITHIN 40" OF DOOR LOCK SHALL BE TEMPERED GLASS.
   - J. DOOR STOPS OF IN-SWINGING EXTERIOR DOORS SHALL BE ONE PIECE CONSTRUCTION.
2. **ALL HOLLOW METAL DOORS TO BE INSULATED.**
3. **SEE SHEET A704 FOR DOOR SIGNAGE REQUIREMENTS.**
4. SEE SHEET A704 FOR DOOR SIGNAGE

BUREAU OF ENGINEERING
OFFICIAL RECORD

THE CITY OF LOS ANGELES OR ITS OFFICERS OR AGENTS SHALL NOT BE RESPONSIBLE FOR THE ACCURACY OR COMPLETENESS OF ELECTRONIC COPIES OF THIS PLAN SHEET.

FILE PATH: A360://Studio City Recreation Center/SCRC-Project Model_Central_Final.rvt

SHEET ISSUE DATE:09/06/17

REVISION DATES
(DESIGN STAGE ONLY)

ENGINEERING
CITY OF LOS ANGELES

BUREAU OF ENGINEERING

NO.	REVISION DESCRIPTION	DATE	BY

BUILDING NO. -

INDEX NO. RP-300106

LICENSED ARCHITECT TED ALLEN LIC. NO. C 23333 RENEWAL 08/31/2019 STATE OF CALIFORNIA

DEPARTMENT OF PUBLIC WORKS
CITY OF LOS ANGELES

TED ALLEN, PE	CITY ENGINEER	DATE:
	ARCHITECTURAL DIVISION	LIC. NO.: C 23333
ARCHITECT: ROBERT LOMELIN		1-24-2019
DESIGNED BY: Z. AKHTER, M. CHAVARRIA, A. KIM, M. LAM		1-24-2019
DRAWN BY: Z. AKHTER, M. CHAVARRIA, A. KIM		1-24-2019
CHECKED BY: ROBERT LOMELIN		1-24-2019
APPROVED BY:MAHMOOD KARIMZADEH,AIA, DEPUTY CITY ENGINEER		1-24-2019

CLIENT: DEPARTMENT OF RECREATION AND PARKS
GENERAL MANAGER: MICHAEL A. SHULL

SHEET TITLE: DOOR SCHEDULE

PROJECT: STUDIO CITY RECREATION CENTER

ADDRESS: 12621 RYE STREET, STUDIO CITY, CA 91604

WORK ORDER NO. E170267B
PLAN FILE NO. 860
DRAWING NO. A701
SHEET 107 OF SHEETS 211

PLOTTED:7/1/2019 11:33:12 AM

WINDOW TYPES

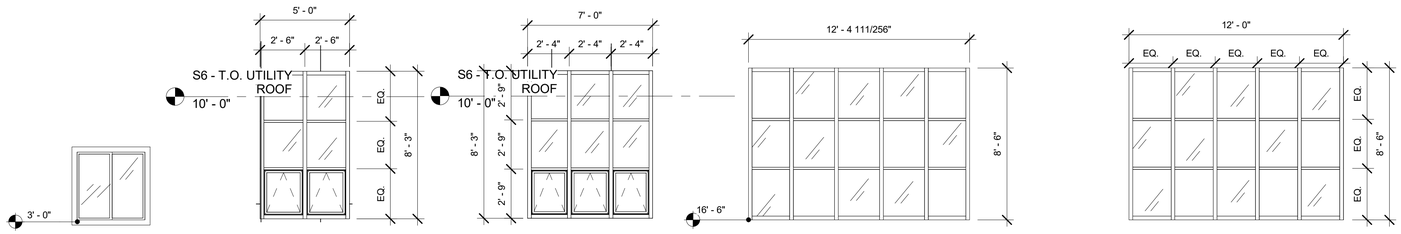

1 WINDOW TYPE A 1/4" = 1'-0"

2 WINDOW TYPE B 1/4" = 1'-0"

3 WINDOW TYPE C 1/4" = 1'-0"

4 WINDOW TYPE D 1/4" = 1'-0"

5 WINTOW TYPE E 1/4" = 1'-0"

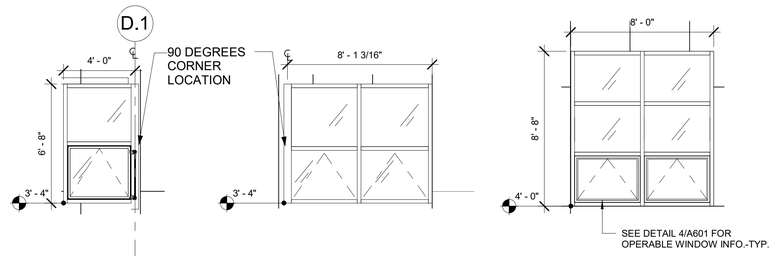

6 WINDOW TYPE G1 1/4" = 1'-0"

7 WINDOW TYPE G2 1/4" = 1'-0"

8 WINDOW TYPE H 1/4" = 1'-0"

12 WINDOW TYPE I 1/4" = 1'-0"

GENERAL WINDOW NOTES- WINDOW TYPE B-G & I

1. CUSTOM WINDOWS FRAME FINISH TO BE POWDER COATED BLACK ALUMINUM
2. GLAZING TO BE 1" INSULATED UNIT , ELECTROCHROMIC GLASS U.N.O.

GENERAL WINDOW NOTES- WINDOW TYPE H1&H2

1. CUSTOM WINDOW (STOREFRONT) SYSTEM FRAME FINISH TO BE POWDER COATED BLACK ALUMINUM
2. GLAZING TO BE 1" INSULATED UNIT, ELECTROCHROMIC GLASS U.N.O.

WINDOW SCHEDULE

	WINDOW			GLAZING			FRAME		DETAILS				
		ROUGH OPENING DIMENSIONS											
NO.	TYPE	WIDTH	HEIGHT	TYPE	COLOR	TEMPERED	MATERIAL	FINISH	HEAD	JAMB	MULLION	SILL	REMARKS
W101A	A	4' - 0"	4' - 0"	AF	CL	T	AF	PF	1/A636	1/A636		1/A636	O. SLIDER W/ TRIM 48"X48"
W101F	J	2' - 0"	5' - 0"	AF	CL	T	AF	PF	2/A636	2/A636		2/A636	1HR RATED WINDOW
W104E		12' - 0"	8' - 6"	EG	CL	T	AF	PF	3/A635	3/A636		4/A635	
W104D		12' - 0"	8' - 6"	EG	CL	T	AF	PF	3/A635	3/A636		4/A635	
W101D	B	5' - 0"	8' - 3"	EG	CL	T	AF	PF	3/A636	3/A636		3/A636	
W101C	B	5' - 0"	8' - 3"	EG	CL	T	AF	PF	3/A636	3/A636		3/A636	
W101B	B	5' - 0"	8' - 3"	EG	CL	T	AF	PF	3/A636	3/A636		3/A636	
W101E	C	7' - 0"	8' - 3"	EG	CL	T	AF	PF	3/A636	3/A636		3/A636	
W104C	CW-1	68' - 5 23/32"	25' - 0"	EG	CL	T	AF	PF					
W100A	CW-2	22' - 3 23/32"	29' - 0"	LE	CL	T	AF	PF					
W100B	CW-3	12' - 10 1/2"	29' - 0"	LE	CL	T	AF	PF					
W104A	D	15' - 2 17/32"	8' - 6"	EG	CL	T	AF	PF	3/A635	3/A636		4/A635	
W104B	D	15' - 2 17/32"	8' - 6"	EG	CL	T	AF	PF	3/A635	3/A636		4/A635	
W201A	G1	4' - 0"	6' - 8"	EG	CL	T	AF	PF	3/A636	3/A636		3/A636	
W201B	G2	8' - 1 3/16"	7' - 0"	EG	CL	T	AF	PF	3/A636	3/A636		3/A636	
W200B	H	8' - 0"	8' - 8"	EG	CL	T	AF	PF	3/A636	3/A636		3/A636	

REMARKS

1. 1 HR. FIRE RATED WINDOW AND FRAME

LEGEND

AA	ANODIZED	EG	ELECTROCHROMIC GLASS	O	OPERABLE	STF	STOREFRONT
AF	ALUMINUM	FF	FACTORY FINISH	PF	PAINT FINISH	T	TEMPERED GLASS
CL	CLEAR	GL	GLASS	SG	SINGLE GLAZE	WD	WOOD
DG	DOUBLE GLAZE	M	METAL	LE	LOW -E TINTED GLAZING		

NOTES

1. VERIFY ALL DIMENSIONS AT FIELD BEFORE MANUFACTURING
2. PROVIDE SNAP-ON MULLION EXTENSION AT STOREFRONT WINDOW ONLY (HORIZONTAL)

BUREAU OF ENGINEERING OFFICIAL RECORD

CURTAIN WALL TYPES

1. CUSTOM CURTAIN WALL FRAME FINISH TO BE POWDER COATED BLACK ALUMINUM
2. ALL GLAZING TO BE 1" INSULATED UNIT, ELECTROCHROMIC U.N.O.
3. SEE DETAIL 3/A601 FOR TYPICAL CURTAIN WALL THERMAL ENTRANCE DETAILS
4. SEE DETAIL 4/A601 FOR TYPICAL PROJECT-OUT WINDOW DETAILS
5. SEE DETAIL2/A601 FOR CURTAIN WALL REINFORCEMENT DETAILS

.

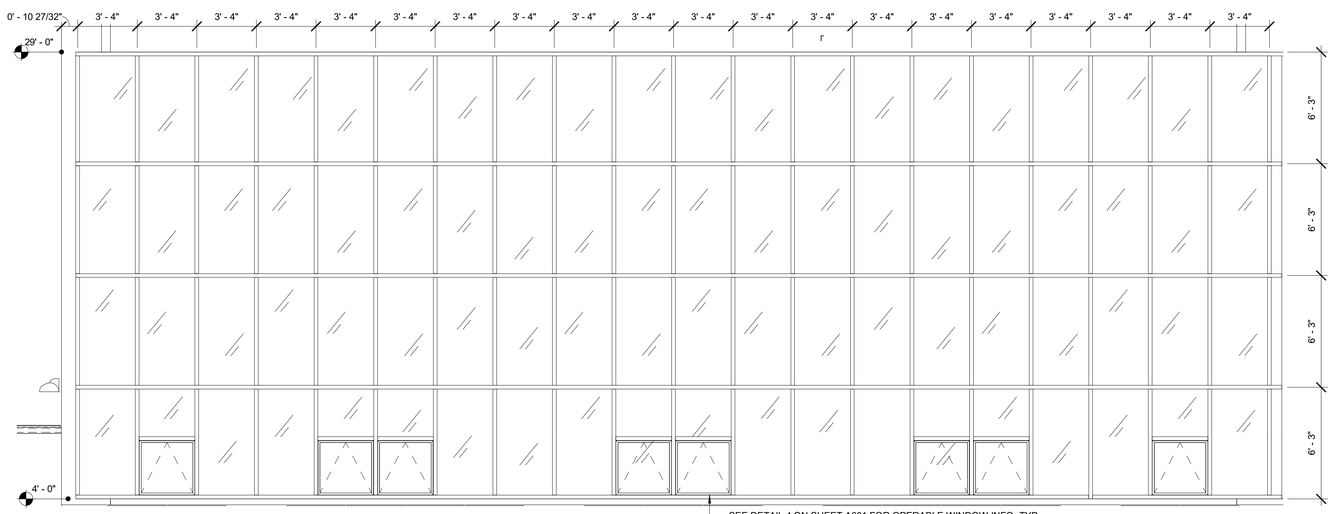

11 CURTAIN WALL GYM SOUTH 1/4" = 1'-0"

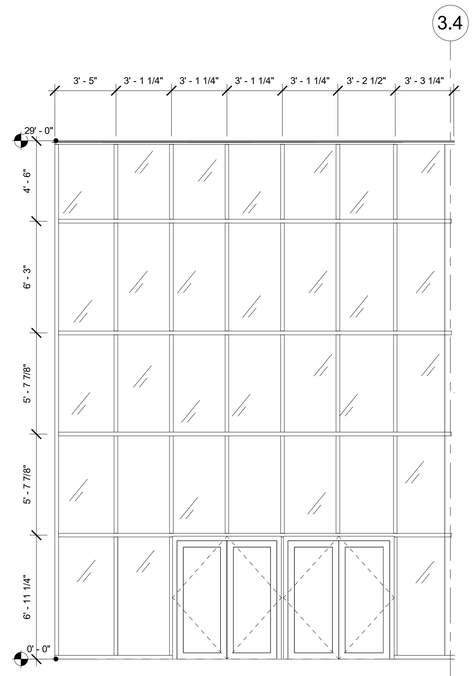

9 CURTAIN WALL LOBBY SOUTH 1/4" = 1'-0"

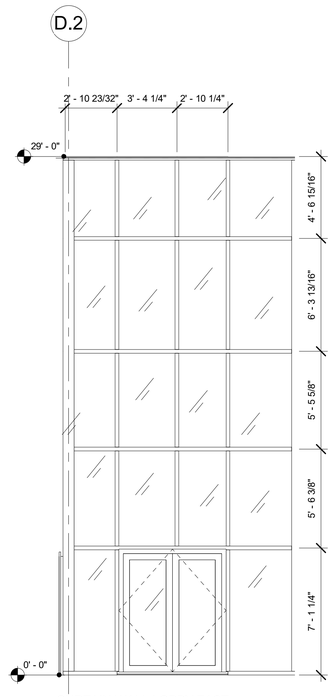

10 CURTAIN WALL LOBBY EAST 1/4" = 1'-0"

THE CITY OF LOS ANGELES OR ITS OFFICERS OR AGENTS SHALL NOT BE RESPONSIBLE FOR THE ACCURACY OR COMPLETENESS OF ELECTRONIC COPIES OF THIS PLAN SHEET.

FILE PATH: A360://Studio City Recreation Center/SCRC-Project Model_Central_Final.rvt

SHEET ISSUE DATE: 09/06/17

REVISION DATES (DESIGN STAGE ONLY)

ENGINEERING
CITY OF LOS ANGELES

BUREAU OF ENGINEERING

NO.	REVISION DESCRIPTION	DATE	BY

BUILDING NO. -

INDEX NO. RP-300106

LICENSED ARCHITECT TED ALLEN LOMELIN LIC. NO. C 23333 RENEWAL 08/31/2019 STATE OF CALIFORNIA

DEPARTMENT OF PUBLIC WORKS
CITY OF LOS ANGELES

TED ALLEN, PE	CITY ENGINEER	DATE: 1-24-2019
ARCHITECTURAL DIVISION	ARCHITECT: ROBERT LOMELIN	LIC. NO.: C 23333
	DESIGNED BY: Z. AKHTER, M. CHAVARRIA, A. KIM, M. LAM	1-24-2019
	DRAWN BY: Z. AKHTER, M. CHAVARRIA, A. KIM	1-24-2019
	CHECKED BY: ROBERT LOMELIN	1-24-2019
	APPROVED BY:MAHMOOD KARIMZADEH,AIA, DEPUTY CITY ENGINEER	1-24-2019

CLIENT: DEPARTMENT OF RECREATION AND PARKS
GENERAL MANAGER: MICHAEL A. SHULL

SHEET TITLE: WINDOW SCHEDULE

PROJECT: STUDIO CITY RECREATION CENTER

ADDRESS: 12621 RYE STREET, STUDIO CITY, CA 91604

WORK ORDER NO. E170267B

PLAN FILE NO. 860

DRAWING NO. A702

SHEET 108 OF SHEETS 211

PLOTTED:7/1/2019 11:33:33 AM

ROOM FINISH SCHEDULE

NO.	ROOM NAME	PERIMETER	AREA	FLOOR	BASE	WALLS				REMARKS	CEILING			REMARKS
						NORTH	EAST	SOUTH	WEST		TYPE	HEIGHT	FINISH	
100	LOBBY	71'-10"	313 SF	CT2	TB	GB / F3	GL	GL	GB / F4	1 & 2	GB			
101	OFFICE	96'-0"	367 SF	CONC2	TB	GB / GL / F4	GB / GL / F4	GB / GL / F4	GB / F2 / F4	1 & 2	GB			
102	REST ROOM	43'-5"	78 SF	CT1		GB / F4 / WT1	GB / F4 / WT1	GB / F4 / WT1	GB / F4 / WT2	1 & 2	GB			
103	GOLD ROOM	19'-11"	25 SF	CONC2		GB / F4	GB / F4	GB / F4	GB / F2	1 & 2	GB			
104	GYMNASIUM	434'-2"	7144 SF	WD2	RB	GB / GL / F4	GB / GL / F4	GB / GL / F4	GB / F3	1 & 2	EXP			
105	STORAGE 1	81'-2"	374 SF	CONC1		GB / F4	GB / F4	GB / F4	GB / F4	1 & 2	EXP			
106	PARK STORAGE	53'-0"	174 SF	CONC1		GB / F4	GB / F4	GB / F4	GB / F4	1 & 2	EXP			
107	COMM. RM	40'-11"	88 SF	CONC1		GB / F4	GB / F4	GB / F4	GB / F4	1 & 2	EXP			
108	ELEC. RM 2	41'-6"	92 SF	CONC1		GB / F4	GB / F4	GB / F4	GB / F4	1 & 2	EXP			
109	ELEC. RM	45'-8"	121 SF	CONC1		GB / F4	GB / F4	GB / F4	GB / F4	1 & 2	EXP			
200	ART STUDIO	174'-0"	1316 SF	WD1	RB	GB / F1 / F4	GB / GL / F4	GB / GL / F1 / F4	GB / F3	1 & 2	EXP			
201	BREAK ROOM	56'-3"	167 SF	CT1	TB	GB / F4	GB / F4	GB / F2	GB / F4	1 & 2	GB			
202	PANTRY	34'-3"	72 SF	CT1	TB	GB / F4	GB / F4	GB / F4	GB / F4	1 & 2	GB			
203	STORAGE 2	33'-5"	69 SF	CONC2		GB / F4	GB / F4	GB / F4	GB / F4	1 & 2	GB			
204	CORRIDOR	23'-2"	33 SF	CONC1	TB	GB / F4	GB / F4	GB / F4	GB / F4	1 & 2	GB			
205	REST RM	34'-3"	73 SF	CT		WT1	WT1	WT1	WT2	1 & 2	GB			
206	REST RM	30'-4"	57 SF	CT		WT2	WT1	WT1	WT1	1 & 2	GB			
207	JAN. RM	50'-5"	75 SF	CONC1		GB / F4	GB / F4	GB / F4	GB / F4	1 & 2	GB			
208	REST RM	16'-2"	15 SF	CT1 / EP		WT1	WT1	WT2	WT1	1 & 2	EXP			
209	REST RM	15'-9"	14 SF	CT1 / EP		WT1	WT1	WT2	WT1	1 & 2	EXP			
210	REST RM	15'-9"	14 SF	CT1 / EP		WT1	WT1	WT2	WT1	1 & 2	EXP			
211	REST RM	15'-9"	14 SF	CT1 / EP		WT1	WT1	WT2	WT1	1 & 2	EXP			
212	REST RM	30'-5"	57 SF	CT1 / EP		WT1	WT2	WT1	WT1	1 & 2	EXP			

ROOM FINISH SCHEDULE REMARKS

1. ALL INTERIOR FINISHES MUST HAVE A CLASS C FIRE CLASS RATING.
2. ALL EXIT CORRIDORS MUST HAVE A CLASS B FIRE CLASS RATING.

ROOM FINISH LEGEND

(MANUFACTURE NAME FOR REFERENCE ONLY)

CB: 6" CERAMIC COVE BASE COLOR TO MATCH FLOOR FIELD TILE

CONC1: SEALED CONCRETE - SMOOTH TROWEL FINISH

CONC2: SEALED SMOOTH FINISH CONTRETE. PROVIDE CONTROL JOINT PER PLAN

CT1: DALTILE PORCELAIN TEXTURED FINISH GRIGIO GRANITE CD40

CT2: DALTILE PORCELAIN TEXTURED FINISH GRIGIO SCURO CD42

EG: EPOXY GROUT

EP: EPOXY PAINT

EXP: EXPOSED STRUCTURE ABOVE

F1: PAINT TO MATCH COLORLIFE TANGERINE TWIST CL 1657N

F2: PAINT TO MATCH COLORLIFE SOJOURN CL 1915A

F3: PAINT TO MATCH COLORLIFE TECTONIC CLV 1127N

F4 PAINT TO MATCH COLORLIFE MISTAYA CLW 1042W

FRB: FIBER REINFORCED PANEL, 4 FOOT HIGH

GB: GYPSUM BOARD FINISH

GL: GLASS - SEE DOOR AND WINDOW SCHEDULE

RB: 6" RUBBER BASE - COLOR/TYPE TO MATCH FLOOR TILE ALIGN GROUT LINES

SC: SEALED CONCRETE SLAB

SGB: SUSPENDED GYPSUM BOARD CEILING

SS: STAINLESS STEAL

TB: 6" TILE BASE - COLOR/TYPE TO MATCH FLOOR TILE ALIGN GROUT LINES

UC: UNFINISHED CONCRETE

WD1: SOLID MAPLE WOOD FLOORING. COLOR

WD2: SOLID MAPLE WOOD FLOORING. COLOR

WRGB: 5/8" WATER RESISTANT GYPSUM BOARD

WT1: DALTILE WALL TILE SEMI-GLOSS ARTIC WHITE 0190

WT2: DALTILE WALL TILE SEMI-GLOSS SPA 0148

ROOM FINISH NOTES

1. THE CONTRACTOR SHALL SUBMIT ALL FINISH COLOR SAMPLE FOR REVIEW AND APPROVAL BY THE ARCHITECT PRIOR TO INSTALLATION.
2. PAINT ALL EXPOSED STRUCTURAL BEAMS, DECKS, A/C DUCTS, PIPES, ELECTRICAL CONDUITS AND COMPONENTS ETCETERA WITH COLOR F2, PAINT ALL EXPOSED STRUCTURAL COLUMNS AND BRACES WITH COLOR F2 UNLESS NOTED OTHERWISE, AND PAINT ALL AIR DIFFUSERS AND CEILING ACCESS DOORS TO MATCH WITH ADJACENT SURFACES, TYPICAL FOR ALL INTERIOR OF THE BUILDING.
3. ALL INTERIOR FINISH MATERIALS APPLIED TO WALLS AND CEILINGS SHALL BE TESTED AS SPECIFIED IN SECTION 802 OF THE LOS ANGELES BUILDING CODE, FOR EXITWAYS, HALLWAYS AND CORRIDORS MUST HAVE MAXIMUM FLAME SPREAD OF CLASS-II, ALL OTHER ROOMS MUST HAVE MAXIMUM FLAME SPREAD OF CLASS-III.
4. EXTEND PLYWOOD SHEETING TO THE ENTIRE WALL WHERE SHEAR WALL PLYWOOD EXISTS IN ORDER TO HAVE AN EVEN WALL SURFACE.
5. REFERENCE POINT FOR WALL AND FLOOR TILE INSTALLATION SHALL START FROM THE CENTER OF THE FLOOR OR WALL SURFACE.
6. PROVIDE RECESSED VALVE OUTLETS FOR REFRIGERATOR AND UTILITY LINES.

BUREAU OF ENGINEERING
OFFICIAL RECORD

THE CITY OF LOS ANGELES OR ITS OFFICERS OR AGENTS SHALL NOT BE RESPONSIBLE FOR THE ACCURACY OR COMPLETENESS OF ELECTRONIC COPIES OF THIS PLAN SHEET.

REVISION DATES (DESIGN STAGE ONLY)

FILE PATH: A360://Studio City Recreation Center/SCRC-Project Model_Central_Final.rvt

SHEET ISSUE DATE: 09/06/17

ENGINEERING
CITY OF LOS ANGELES

BUREAU OF ENGINEERING

NO.	REVISION DESCRIPTION	DATE	BY

BUILDING NO. -

INDEX NO. RP-300106

LICENSED ARCHITECT TED ALLEN LIC. NO. C 23333 REGISTERED STATE OF CALIFORNIA

DEPARTMENT OF PUBLIC WORKS

CITY ENGINEER

	DATE:
TED ALLEN, PE	1-24-2019
ARCHITECTURAL DIVISION	1-24-2019
ARCHITECT: ROBERT LOMELIN LIC. NO.: C 23333	1-24-2019
DESIGNED BY: Z. AKHTER, M. CHAVARRIA, A. KIM, M. LAM	1-24-2019
DRAWN BY: Z. AKHTER, M. CHAVARRIA, A. KIM	1-24-2019
CHECKED BY: ROBERT LOMELIN	1-24-2019
APPROVED BY:MAHMOOD KARIMZADEH,AIA, DEPUTY CITY ENGINEER	1-24-2019

CITY OF LOS ANGELES

CLIENT: DEPARTMENT OF RECREATION AND PARKS
GENERAL MANAGER: MICHAEL A. SHULL

SHEET TITLE: FINISH SCHEDULE

PROJECT: STUDIO CITY RECREATION CENTER

ADDRESS: 12621 RYE STREET, STUDIO CITY, CA 91604

WORK ORDER NO. E170267B

PLAN FILE NO. 860

DRAWING NO. A703

SHEET 109 OF SHEETS 211

PLOTTED:7/1/2019 11:33:38 AM

1 SIGNAGE PLAN
1/16" = 1'-0"

SIGNAGE SCHEDULE

SIGN NUMBER	ROOM NO.	SIGN TYPE	MESSAGE	MOUNTING HEIGHT	LETTER COLOR	BACKGROUND COLOR	TEXT STYLE	TEXT SIZE	BRAIL	REMARK
1	206, 207, 208, 209, 210, 211	C, D								
2	102, 205, 206, 212	A, B								
3	207	G	JANITOR ROOM							
4	100	K								
5	100	J	1,023 OCCUPANTS							CONTRACTOR TO VERIFY
6	201	G	KITCHEN							
7	105, 203	G	STORAGE ROOM							
8	106	G	PARK STORAGE							
9	107	G	COMMUNICATION ROOM							
10	108	G	BATTERY STORAGE							
11	109	L	ELECTRICAL ROOM							
12	103	G	GOLD ROOM							
13	202	G	PANTRY							
14	200A	G	COMMUNITY ROOM							
15	200A	J	88 OCCUPANTS							CONTRACTOR TO VERIFY
16	200B	G	COMMUNITY 01							
17	200C	G	COMMUNITY 02							
18	200D	G	COMMUNITY 03							
19	200B	J	30 OCCUPANTS							CONTRACTOR TO VERIFY
20	200C	J	30 OCCUPANTS							CONTRACTOR TO VERIFY
21	200D	J	30 OCCUPANTS							CONTRACTOR TO VERIFY
22	101	G	OFFICE							
23	104	G	GYMNASIUM							
24	101	N								
25	100	H								

SIGNAGE NOTES:

1. ASI SIGNAGE INNOVATIONS - INFINITY SERIES IS SIGHTED IN THIS DRAWINGS. OBTAIN ALL PRODUCT UNDER SINGLE MANUFACTURER.
2. SIGNS MUST COMPLY WITH THE TITLE 24, DISABLED ACCESS REQUIREMENTS AND LATEST EDITION OF THE LABC.
3. SUBMIT SHOP DRAWINGS OF SIGNAGE AND OBTAIN APPROVAL FROM THE ARCHITECT PRIOR TO ANY FABRICATION.
4. ALL TEXT SHALL BE IN UPPER CASE LETTERS.
5. RESTROOM DOOR SIGNAGE SHALL BE MOUNTED CENTERED TO THE WIDTH OF THE DOOR AND THE MOUNTING HEIGHT MEASURED FROM THE FINISH FLOOR TO THE CENTER OF THE SIGNAGE.
6. RESTROOM WALL SIGNAGE MOUNTING HEIGHT SHALL BE MEASURED FROM THE FINISH FLOOR TO THE CENTER OF THE SIGNAGE.
7. ROOM IDENTIFICATION SIGNAGE MOUNTING HEIGHT SHALL BE MEASURED FROM THE FINISH FLOOR TO THE TOP OF THE SIGNAGE. SIGNS SHALL BE PLACED ON THE STRIKE SIDE OF THE DOOR.
8. ROOM IDENTIFICATION SIGNAGE ON DOORS SHALL BE CENTERED TO THE WIDTH OF THE DOOR.
9. ALL SIGNAGE SHALL BE ACRYLIC PLASTIC MATERIAL WITH RAISED CHARACTERS AND SYMBOLS, U.N.O.
10. SIGNS WITH RAISED CHARACTERS AND BRAILLE SHALL BE LOCATED 48 INCHES (1220 mm) MINIMUM ABOVE THE FINISH FLOOR OR GROUND SURFACE MEASURED FROM THE BASELINE OF THE LOWEST LINE OF BRAILLE AND 60 INCHES (1525 mm) MAXIMUN ABOVE THE FINISH FLOOR OR GROUND SURFACE, MEASURED FROM THE BASELINE OF THE HIGHEST LINE OF RAISED CHARACTERS. MOUNTING LOCATION SHALL BE DETERMINED SO THAT A PERSON MAY APPROACH WITHIN 3 INCHES (76 mm) OF SIGNAGE WITHOUT ENCOUNTERING PROTRUDING OBJECTS OR STANDING WITHIN THE SWING OF A DOOR.

SIGN TYPES

SIGN TYPE 'A'
ALL GENDER DOOR SIGN

SIGN TYPE 'B'
ALL GENDER WALL SIGN

SIGN TYPE 'C'
RESTROOM DOOR SIGNS, ASI INFINITY SERIES, SEE SPEC.

SIGN TYPE 'D'

SIGN TYPE 'E'
RESTROOM WALL SIGNS, ASI INFINITY SERIES, SEE SPEC.

SIGN TYPE 'F'

SIGN TYPE 'G'
TACTILE SIGN

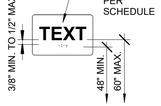

SIGN TYPE 'H'

SIGN TYPE 'I'
TACTILE EXIT ROUTE SIGN

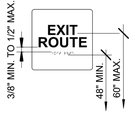

SIGN TYPE 'J'
OCCUPANCY SIGN, ASI INFINITY SERIES OR APPROVED EQUAL, SEE SPEC.

SIGN TYPE 'K'

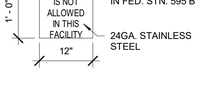

SIGN TYPE 'L'

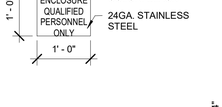

SIGN TYPE 'M'

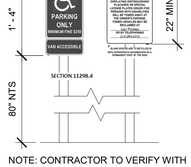

NOTE: CONTRACTOR TO VERIFY WITH LOCAL POLICE FOR MOST UPTO DATE TOWING COMPANY INFORMATION

SIGN TYPE 'N'
CLEAN AIR SYMBOL

SIGN TYPE 'Q'
PAINTED ANODIZED METAL CAST LETTERS (OPTIMA), TEXT DEPTH 3"
MOUNTING: BOTTOM ATTACHMENT WITH BLIND STUD
SUBMIT BOTTOM ATTACHMENT OPTIONS AVAILABLE FROM MANUFACTURER FOR ARCHITECTS SELECTION BY ASI SIGN SYSTEMS INC. OR APPROVED EQUAL
MESSAGE: STUDIO CITY RECREATION CENTER
12621 RYE STREET

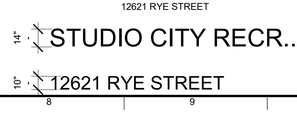

SIGN TYPE 'O'
ADA PAVEMENT SYMBOL

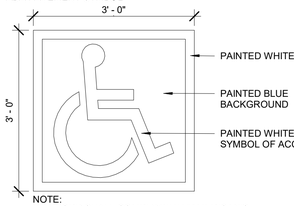

NOTE:
ALL WORK SHALL COMPLY WITH "AMERICAN'S WITH DISABILITIES ACT" (ADA) OF 1990.

SIGN TYPE 'P'
INTERNATIONAL SYMBOL OF ACCESSIBILITY - SITE SIGN

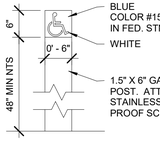

TACTILE RESTROOM SIGNAGE AND CONTRASTING RESTROOM SYMBOLS

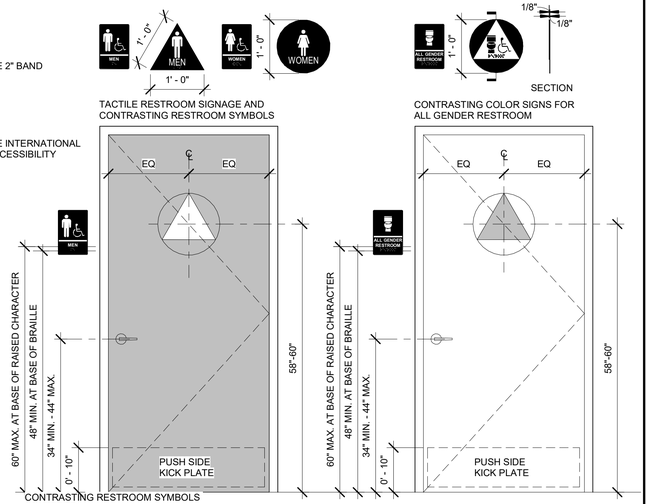

CONTRASTING COLOR SIGNS FOR ALL GENDER RESTROOM

BUREAU OF ENGINEERING
OFFICIAL RECORD

ENGINEERING
CITY OF LOS ANGELES

BUREAU OF ENGINEERING

NO.	REVISION DESCRIPTION	DATE	BY

BUILDING NO. -

INDEX NO. RP-300106

LICENSED ARCHITECT TED ALLEN LIC. NO. C 23333 RENEWAL 08/31/2020 STATE OF CALIFORNIA

DEPARTMENT OF PUBLIC WORKS

CITY OF LOS ANGELES

TED ALLEN, PE	CITY ENGINEER	DATE:
	ARCHITECTURAL DIVISION	
	ARCHITECT: ROBERT LOMELIN	LIC. NO.: C 23333
	DESIGNED BY: Z. AKHTER, M. CHAVARRIA, A. KIM, M. LAM	1-24-2019
	DRAWN BY: Z. AKHTER, M. CHAVARRIA, A. KIM	1-24-2019
	CHECKED BY: ROBERT LOMELIN	1-24-2019
	APPROVED BY:MAHMOOD KARIMZADEH,AIA, DEPUTY CITY ENGINEER	1-24-2019

CLIENT: DEPARTMENT OF RECREATION AND PARKS
GENERAL MANAGER: MICHAEL A. SHULL

SHEET TITLE: SIGNAGE SCHEDULE

PROJECT: STUDIO CITY RECREATION CENTER

ADDRESS: 12621 RYE STREET, STUDIO CITY, CA 91604

WORK ORDER NO. E170267B
PLAN FILE NO. 860
DRAWING NO. A704
SHEET 110 OF SHEETS 211

PLOTTED:7/1/2019 11:33:46 AM

THE CITY OF LOS ANGELES OR ITS OFFICERS OR AGENTS SHALL NOT BE RESPONSIBLE FOR THE ACCURACY OR COMPLETENESS OF ELECTRONIC COPIES OF THIS PLAN SHEET.

FILE PATH: A360://Studio City Recreation Center/SCRC-Project Model_Central_Final.rvt

SHEET ISSUE DATE: 09/06/17

REVISION DATES: (DESIGN STAGE ONLY)

THE CITY OF LOS ANGELES OR ITS OFFICERS OR AGENTS SHALL NOT BE RESPONSIBLE FOR THE ACCURACY OR COMPLETENESS OF ELECTRONIC COPIES OF THIS PLAN SHEET.

FILE PATH: A360://Studio City Recreation Center/SCRC-Project Model_Central_Final.rvt

SHEET ISSUE DATE: 09/06/17

REVISION DATES (DESIGN STAGE ONLY)

CITY OF LOS
STUDIO CITY

RECREATION CENTER

<DEDICATION DATE>

MAYOR
ERIC GARCETTI

CITY
PRESIDENT
HERB WESSON

COUNCIL DISTRICT # 3
COUNCIL MEMEBER
BOB BLUMENFIELD

BUREAU OF ENGINEERING
CITY ENGINEER
GARY LEE MOORE, P.E., ENV SP

DEPARTMENT OF RECREATION AND
GENERAL
MICHAEL A. SHULL

BOARD OF RECREATION AND
PRESIDENT
SYLVIA PATSAOURAS
VICE PRESIDENT
LYNN ALVAREZ

COMMISSIONERS
MELBA CULPEPPER
MISTY M. SANFORD
PILAR DIAZ

BUREAU
CONTRAC
ADMINISTRATIO
INSPECTOR OF PUBLIC WORKS
JOHN L. REAMER

ARCHITECT: ARCHITECTURAL DIVISION, BUREAU OF ENGINEERING
CONTRACTOR: ROYAL CONSTRUCTION

1' - 6"

2' - 0"

NOTES:

1. CONTRACTOR SHALL VERIFY LAYOUT AND NAMES WITH ARCHITECT OR PROJECT MANAGER PRIOR TO FABRICATION. CORRECT AND UPDATE INFORMATION AS NECESSARY. SUBMIT SHOP DRAWINGS FOR APPROVAL.
2. SEE CONTRACT SPECIFICATIONS FOR PLAQUE REQUIREMENTS.
3. CONTRACTOR TO VERIFY PLAQUE MOUNTING REQUIREMENTS AND LOCATION PRIOR TO FABRICATION.
4. PLAQUE SHALL NOT BE FABRICATED LESS THAN THREE MONTHS PRIOR TO COMSTRUCTION COMPLETION.
5. ATTACH PLAQUE AT 6 PLACES AS SHOWN.
6. FOLLOW MFG. RECOMMENDATIONS FOR ATTACHMENT METHOD.
7. BUILDING PLAQUE SHALL BE OF BRONZE MATERIAL.

2 BUILDING PLAQUE
6" = 1'-0"

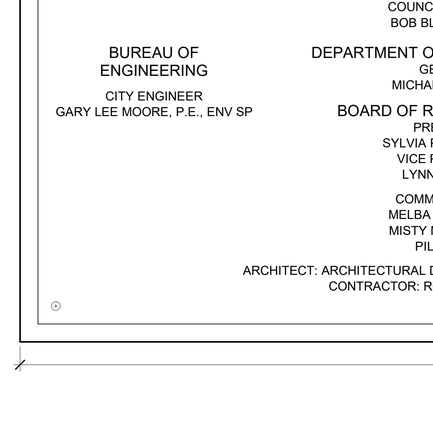

4 ATTACHMENT DETAIL
1 1/2" = 1'-0"

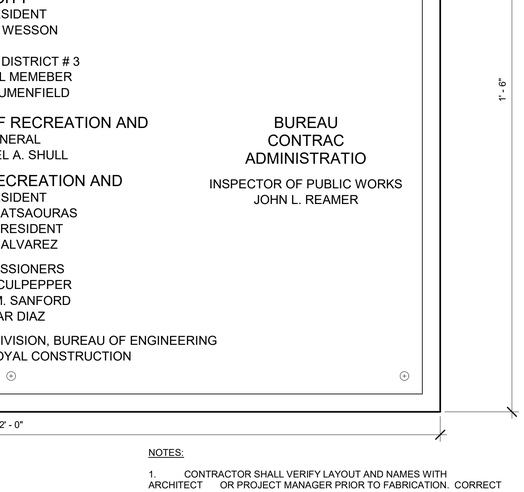

SIGNAGE NOTES:

SIGN WILL BE FABRICATED OF 1/8" PAINTED ALUMINUM WITH EXTERIOR VINYL DIE CUT COPY AND PAINTED GRAPHICS AND LETTERING. SIGN PANELS WILL BE ATTACHED TO A 1"X6" ALIMINUM FRAME, BOLTED INTO A CONCRETE FOOTING.
PANEL SHALL BE 3'-6" HIGH ATTACHED TO A 6'-0" FRAME

3 TYPE 15- EDUCATIONAL SIGNAGE
1" = 1'-0"

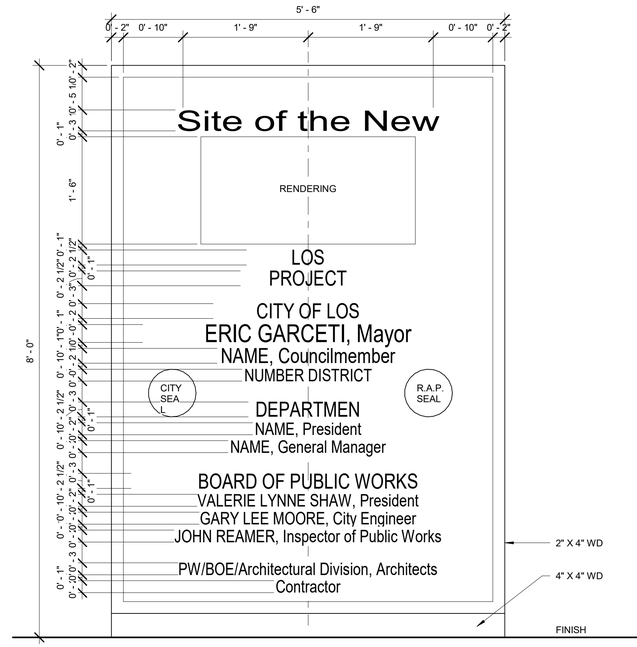

FRONT

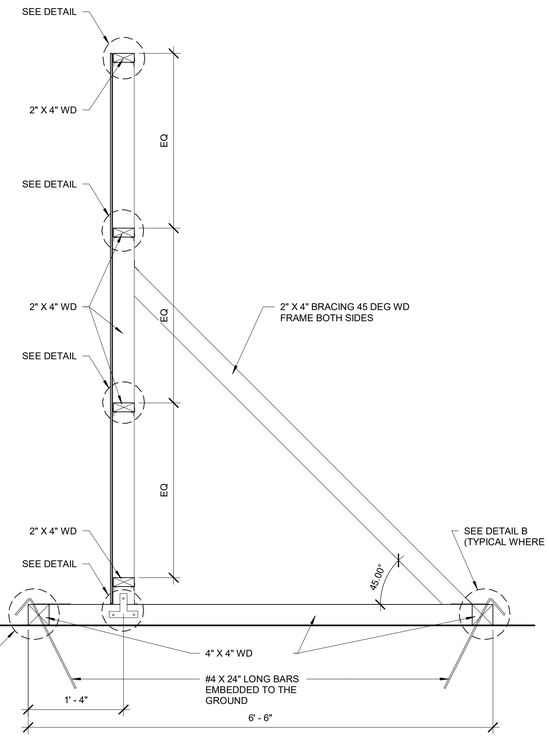

SIDE

NOTES:

1. MATERIAL: WHITE SHEET METAL
2. COLOR: WHITE BACKGROUND, BLACK LETTERS.
3. TYPE STYLE: HELVETICA BOLD, REGULAR.
4. SIGN FRAME TO BE CONSTRUCTED WITH DOUGLAS FIR SOLID STOCK, W.C.C.B. AND BETTER, V.G. FINISH.
5. LOCATION OF SIGN TO BE PROVIDED BY CITY OF L.A. PROJECT ENGINEER.
6. SEE SPECIFICATION SECTION 01500 FOR ADDITIONAL SIGNAGE REQUIRED.
7. ALL INFORMATION TO BE VERIFIED WITH CITY OF L.A. ENGINEER PRIOR TO SIGN PRODUCTION. SUBMIT SHOP DRAWINGS.

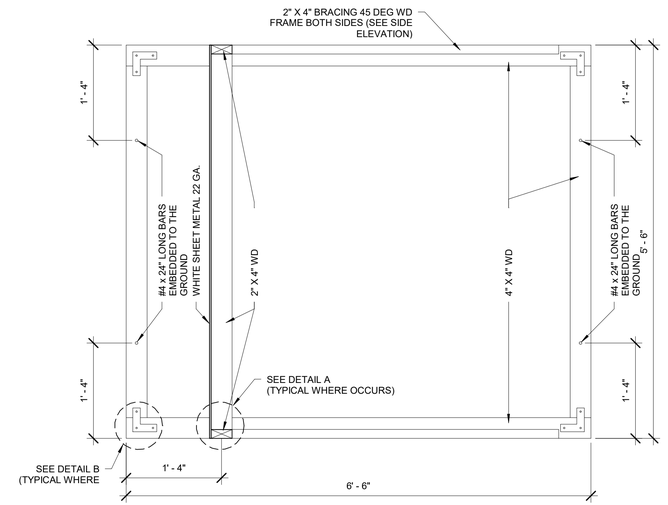

PLAN

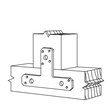

DETAIL A

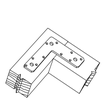

DETAIL B

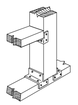

DETAIL

1 CONSTRUCTION SIGN
1" = 1'-0"

BUREAU OF ENGINEERING
OFFICIAL RECORD

ENGINEERING
CITY OF LOS ANGELES

BUREAU OF ENGINEERING

NO.	REVISION DESCRIPTION	DATE	BY

BUILDING NO. -

INDEX NO. RP-300106

LICENSED ARCHITECT LOMELIN C 23333 REGISTERED STATE OF CALIFORNIA

DEPARTMENT OF PUBLIC WORKS
CITY OF LOS ANGELES

	CITY ENGINEER	DATE:
TED ALLEN, PE		
	ARCHITECTURAL DIVISION	
ARCHITECT: ROBERT LOMELIN	LIC. NO.: C 23333	1-24-2019
DESIGNED BY:	Z. AKHTER, M. CHAVARRIA, A. KIM, M. LAM	1-24-2019
DRAWN BY:	Z. AKHTER, M. CHAVARRIA, A. KIM	1-24-2019
CHECKED BY:	ROBERT LOMELIN	1-24-2019
APPROVED BY:	MAHMOOD KARIMZADEH,AIA, DEPUTY CITY ENGINEER	1-24-2019

CLIENT: DEPARTMENT OF RECREATION AND PARKS
GENERAL MANAGER: MICHAEL A. SHULL

SHEET TITLE: CONSTRUCTION SIGN, BUILDING PLAQUE

PROJECT: STUDIO CITY RECREATION CENTER

ADDRESS: 12821 RYE STREET, STUDIO CITY, CA 91604

WORK ORDER NO. E170267B

PLAN FILE NO. 860

DRAWING NO. A801

SHEET 111 OF SHEETS 211

PLOTTED:7/1/2019 11:33:50 AM

ABBREVIATIONS

		LG. LGTH.	LONG LENGTH
A.B.	ANCHOR BOLT	LLH	LONG LEG HORIZONTAL
ADDL.	ADDITIONAL	LLO	LONG LEG OUTSTANDING
ADJ.	ADJACENT	LLV	LONG LEG VERTICAL
ALLOW.	ALLOWABLE	LTWT.	LIGHT WEIGHT
ALT.	ALTERNATE		
APPROX.	APPROXIMATE	MB.	MACHINE BOLTS
ARCH.	ARCHITECTURAL	MFR.	MANUFACTURER
ASSY.	ASSEMBLY	MK.	MARK
		MAX.	MAXIMUM
BDRY.	BOUNDARY	MECH.	MECHANICAL
BL	BOTTOM LAYER	MEMB.	MEMBRANE
BLK	BLOCK	MEZZ.	MEZZANINE
BLKG.	BLOCKING	MIN.	MINIMUM
BM.	BEAM		
BN	BOUNDARY NAILING	N.	NORTH
BOT.	BOTTOM	N.I.C.	NOT IN CONTRACT
B.S.	BOTH SIDES	NO.	NUMBER
BT	BENT	N.S.	NEAR SIDE
BTWN.	BETWEEN	N.-S.	NORTH-SOUTH
		N. ST.	NELSON STUDS
CJ	CEILING JOIST	N.T.S.	NOT TO SCALE
CLR.	CLEAR		
CP	COMPLETE PENETRATION	O.D.	OUTSIDE DIAMETER
		O.F.	OUTSIDE FACE
COL.	COLUMN	OH	OPPOSITE HAND
CONC.	CONCRETE	OPNG.	OPENING
CONN.	CONNECTION	OPP.	OPPOSITE
CONT.	CONTINUOUS		
CSK.	COUNTERSINK	PLN.	PLAN
CTRS.	CENTERS	PL	PLATE
		PLYWD.	PLYWOOD
DBL.	DOUBLE	P.L.	PROPERTY LINE
DEPR.	DEPRESSION	P.T.	PRESSURE TREATED
DSTR.	DRAG STRUT		
DIA.	DIAMETER	R	RADIUS
DN.	DOWN	REG.	REGULAR
DO.	DITTO	REINF.	REINFORCEMENT
DWG.	DRAWING	REQD.	REQUIRED
DS	DOUBLE STIRRUPS	RJ	ROOF JOIST
DWLS.	DOWELS	RR	ROOF RAFTERS
E.	EAST	SCHED.	SCHEDULE
EA.	EACH	SECT.	SECTION
E.F.	EACH FACE	SHTG.	SHEATHING
EMBMT.	EMBEDMENT	SIM.	SIMILAR
EQUIP.	EQUIPMENT	SLO	SHORT LEG
EA. W	EA. WAY		OUTSTANDING
E.-W.	EAST-WEST	S.	SOUTH
EXIST.	EXISTING	SPCG.	SPACING
EXT.	EXTERIOR	SQ.	SQUARE
		STAG.	STAGGERED
FD	FLOOR DRAIN	STD.	STANDARD
FDN.	FOUNDATION	STIRR.	STIRRUPS
F.F.	FINISH FLOOR	STL.	STEEL
FJ.	FLOOR JOIST	STR.	STRAIGHT
FLG.	FLANGE	STRUCT.	STRUCTURAL
FLR.	FLOOR	SUPPT.	SUPPORT
F.O.S.	FACE OF STUD	SYM.	SYMMETRICAL
F.P.	FULL PENETRATION		
F.S.	FAR SIDE	T & B	TOP AND BOTTOM
FTG.	FOOTING	T.C.	TOP OF CURB
F.W.	FACE OF WALL	TEMP.	TEMPERATURE
		TG	TAPERED STEEL GIRDER
GA.	GAGE	TH.	THICK
GALV.	GALVANIZED	THRD.	THREADED
GL	GLUED LAMINATED BEAM	TL	TOP LAYER
		T.S.	TOP OF STEEL
GRD.	GRADE	T.W.	TOP OF WALL
		TYP.	TYPICAL
HD	HOLD DOWN		
HDR	HEADER	U.N.O.	UNLESS NOTED
HGR.	HANGER		OTHERWISE
HK.	HOOK	VERT.	VERTICAL
HORIZ.	HORIZONTAL		
H.S.	HIGH STRENGTH	W.	WEST
		WD.	WOOD
I.D.	INSIDE DIAMETER	W/	WITH
I.F.	INSIDE FACE	W.O.	WITHOUT
INT.	INTERIOR	W.P.	WORKING POINT
		WWF	WELDED WIRE FABRIC
JST.	JOIST		
JT.	JOINT		

L.A. RESEARCH REPORT NUMBERS

UNLESS NOTED OTHERWISE THE FOLLOWING LISTED ITEMS SHALL COMPLY WITH THE INDICATED RESEARCH REPORT NUMBERS:

A. METAL STUDS & TRACKS - RR 25821 & 25889 (SSMA)
B. METAL DECKS - RR 23789 VERCO, ICC-ER 0226 TORIS
C. SELF-DRILLING, SCREWS - RR 25678 HILTI, 25915 TEK
D. TRACK FASTENERS - RR 25646, 25675
E. ANCHOR BOLTS - RR 25701, 25901, 25903, 25577M, 26057
F. HOLDOWNS & TIEBACKS - RR 25828, 25720
G. FRAMING ANGLES - RR 25716, 25814, 25910
H. STRAPS - RR 25713, 25910, 25489
I. JOIST HANGERS - RR 25807, 25801, 25804, 25489
J. SIMPSON EPOXY - RR 25744, 25965
K. NON-SHRINK GROUT - RR 24968, 25451, 25916

GENERAL

1. ALL WORK SHALL COMPLY WITH THE MINIMUM PROVISIONS OF THE CALIFORNIA BUILDING CODE, 2016 EDITION, AS MODIFIED BY THE CITY OF LOS ANGELES (LABC 2017).
2. SPECIFIC NOTES AND DETAILS SHALL TAKE PRECEDENCE OVER GENERAL NOTES AND DETAILS.
3. THE CONTRACTOR SHALL VERIFY ALL CONTRACT DOCUMENTS, SITE DIMENSIONS AND CONDITIONS PRIOR TO STARTING WORK AND SHALL NOTIFY THE ARCHITECT OF ANY DISCREPANCIES OR INCONSISTENCIES.
4. REFER TO ARCHITECTURAL DRAWINGS FOR ALL WALL DIMENSIONS, WALL OPENINGS AND ALL OTHER DIMENSIONS NOT SHOWN ON THE STRUCTURAL DRAWINGS. DO NOT SCALE DRAWINGS.
5. CONTRACTORS RESPONSIBLE FOR THE CONSTRUCTION OF A WIND OR SEISMIC FORCE RESISTING SYSTEM/COMPONENT LISTED IN THE "STATEMENT OF SPECIAL INSPECTION" SHALL SUBMIT A WRITTEN STATEMENT OF RESPONSIBILITY TO THE LADBS INSPECTORS AND THE OWNER PRIOR TO THE COMMENCEMENT OF WORK ON SUCH SYSTEM OR COMPONENT PER SEC 1709.1.
6. THERE ARE THREE STRUCTURALLY SEPARATE BUILDINGS: THE GYM., THE MULTI-PURPOSE AND THE UTILITY BUILDINGS. ALL LATERAL LOAD RESISTING SYSTEMS ARE "SMF", EXCEPT FOR CANOPY ON GRID 4, IN NORTH SOUTH DIRECTION IS "OMF".

DESIGN LOADS

1. LIVE LOADS: ROOF LOAD:
FLAT - 20 PSF.

FLOORS:
TYPICAL - 100 PSF.

2) WIND LOAD FACTORS:
(CBC 2016, Sec. 1609.6.3, ASCE 7-10)

Method 1:

1-	BASIC WIND LOAD	=	110	mph
2-	IMPORTANCE FACTOR, Iw	=	1.15	
3-	ROUGHNESS EXPOSURE	=	B	
		=	B	
4-	Stagnation, qs	=	30.98	
	Table: 1909.6.2(1)			
5-	Net Pres. Coef.	=	0.94	
	Table: 1909.6.2(2)			
	Gust, G: ASCE7 26.9.1	=	0.85	
	Dir. Fatror Kd ASCE7 T26.6-1	=	0.85	
6-	Topo. Expos. Factor, Kzt ASCE 26.8.2	=	1.00	
7-	Velocity Exposure Coefficient: Kz ASCE 27.4.1	HEIGHT, h ft.		
	T-27.3-1	25	= 0.66	psf

WIND PRESSURE: P psf

Where: P =qs Kz Cnet I Kzt

	P			
GENERAL	30	=	22.1	psf
Cladding & Component				
P * 1.28	/ 0.94	=	**30.1**	psf

ASSEMBLY USE 300 OR MORE OCCUPANTS: RISK CATEGORY III.

SEISMIC FACTORS: BUILDINGS

USGS-Earthquake Ground Motion Parameter

Java Ground Motion Parameter Calculator

Short term Spec. Acc., Ss				=	2.361	
Long term Spec. Acc., S1				=	0.812	
Seis. Site Type				=	D	
Site Coef., Fa				=	1.000	
Site Coef., Fv				=	1.500	
Sms =	Fa	X	Ss	=	2.361	
Sm1 =	Fv	X	S1	=	1.218	
Sds =	2/3		Sms	=	**1.574**	
Sd1 =	2/3		Sm1	=	0.812	
IMPORTANCE FACTOR				=	1.25	
SDC:	E				**SMF**	**OMF**
Resp. Modif., R(T 12.2-1,C.1)SMF				=	8	3.5
Defl. Amp., Cd (T. 12.2-1)				=	5.5	3
Sys. Overstreng., Ω_0				=	3	3
STRUCTURE PERIOD:						
Ct				=	0.028	
x				=	0.800	
h_n				=	30.00	ft
T= Ct * $(h_n)^x$				=	0.425	sec.
BASE SHEAR:						
V =	W Sds / (R/I)			=	0.246	X W
Vmax =	W Sd1 / T(R/I)			=	0.298	X W
Vmin =	W 0.01			=	0.010	X W
$Vmin_{(Z4)}$ =	W 0.5S1 / (R/I)			=	0.063	X W
GOVERNING BASE SHEAR				=	0.246	X W
				Cs USE: =	**0.246**	**0.562**

FOUNDATIONS

1. FOUNDATION DESIGN IS BASED ON RECOMMENDATIONS CONTAINED WITHIN THE REPORT: GEOTECHNICAL ENGINEERING REPORT STUDIO CITY GYMNASIUM AT "12621 RYE STREET, STUDIO CITY, CA 90604" BY CITY OF LOS ANGELES DEPARTMENT OF PUBLIC WORKS BUREAU OF ENGINEERING GEOTECHNICAL ENGINEERING GROUP DATED AUGUST 12, 2015, W.O. #E170267A.
2. MAT FDN. MAY BE FOUNDED ON THE NEWLY PLACED ENGINEERED FILL AS PER APPROVED NOTED SOIL REPORT. PREPARE THE BUILDING PAD AREA BY REMOVAL AND RECOMPACTION OF THE UPPER 5 FEET OF EXISTING MATERIAL, AND THE PROPOSED BUILDING FOUNDATIONS IS TO BE UNDERLAIN BY A MINIMUM OF 2 FEET OF NEWLY PLACED ENGINEERED FILL (AS SPECIFIED BY AND APPROVED BY THE GEOTECHNICAL ENGINEER). THE EXISTING FILL (AS IS) MAY NOT BE USED TO SUPPORT MAJOR CONSTRUCTION.
3. THE BOTTOM OF FOOTINGS SHALL BE 24 INCHES MINIMUM BELOW THE LOWEST ADJACENT GRADE AND 24 INCHES MINIMUM INTO RECOMMENDED BEARING MATERIAL.
4. THE FOLLOWING ALLOWABLE SOIL BEARING PRESSURES ARE USED FOR FOOTING DESIGN: (1.33 INCR. FOR SHORT TERM LOADING IS ALLOWED)

ITEM	MINIMUM WIDTH IN.	BEARING VALUE (PSF)	WIDTH* INCREASE (PSF)	DEPTH* INCREASE (PSF)	MAXIMUM BEARING (PSF)
CONT. WALL FT.	12	1200	-	-	1200
COLUMN FTGS.	24	1200	-	-	1200
PASSIVE EARTH PRESSURE:		275/FT DEPTH			275

*FOR EACH ADDITIONAL FOOT INCREASE.

COEF. OF FRICTION: 0.35

5. BACKFILL SHALL BE COMPACTED BY MECHANICAL MEANS. FLOODING AND/OR WATER SHALL NOT BE PERMITTED.
6. BACKFILL SHALL NOT BE PLACED AGAINST FOUNDATION WALLS UNTIL WALLS HAVE ATTAINED SUFFICIENT STRENGTH TO WITHSTAND LATERAL PRESSURES.
7. THE GEOLOGIST AND/OR SOILS ENGINEER SHALL INSPECT ALL FOUNDATION EXCAVATIONS PRIOR TO PLACING CONCRETE OR REINFORCEMENT.
8. ALL EARTHWORK AND RECOMPACTION OPERATIONS SHALL BE IN CONFORMANCE WITH THE RECOMMENDATIONS OF THE FOUNDATION INVESTIGATION REPORT AND SHALL BE SUBJECT TO THE INSPECTION AND APPROVAL OF THE GEOLOGIST AND/OR SOILS ENGINEER.
9. THE GEOTECHNICAL REPORT, REFERRED TO IN NOTE 1 OF THIS SECTION, SHALL, IN ITS ENTIRETY, BE INCLUDED WITHIN THE CONTRACT DOCUMENTS.

CONCRETE

1. ALL PHASES OF WORK PERTAINING TO CONCRETE CONSTRUCTION SHALL CONFORM TO THE BUILDING CODE REQUIREMENTS FOR REINFORCED CONCRETE, ACI 318, WITH MODIFICATIONS AS NOTED IN THE BUILDING CODE AND THE CONTRACT DOCUMENTS.
2. ALL CONCRETE SHALL COMPLY WITH A MINIMUM 28-DAY COMPRESSIVE STRENGTH PER THE FOLLOWING LIST:

LOCATION IN STRUCTURE	STRENGTH (PSI)	TYPE
GRADE BEAMS	4,000	REG. WT
CURBS AND WALLS	4,000	REG. WT
SLAB ON GRADE	4,000	REG. WT.
ALL OTHER CONCRETE	4,000	REG. WT.

3. PORTLAND CEMENT SHALL COMPLY WITH ASTM C150, TYPE I OR TYPE II. LOW ALKALI.
4. AGGREGATE FOR REGULAR WEIGHT STONE CONCRETE SHALL COMPLY WITH ASTM C33. AGGREGATE SHALL BE NON-REACTIVE. AGGREGATE FROM SOURCES WITH HISTORY OF POTENTIAL REACTIVITY SHALL COMPLY WITH ASTM C289 AND/OR C227.
5. READY MIX CONCRETE SHALL COMPLY WITH ASTM C94.
6. REINFORCING STEEL SHALL CONFORM TO ASTM A615. UNLESS NOTED OTHERWISE, GRADE SHALL BE:
TIES AND STIRRUPS - GRADE 40
ALL OTHER REINFORCING STEEL - GRADE 60
7. UNLESS NOTED OTHERWISE, ALL DETAILING, FABRICATION, AND ERECTION ON REINFORCING BARS SHALL CONFORM TO THE CURRENT EDITION OF THE A.C.I. "MANUAL OF STANDARD PRACTICE FOR DETAILING CONCRETE STRUCTURES." SHOP DRAWINGS SHALL BE SUBMITTED TO THE ARCHITECT FOR REVIEW.
8. UNLESS NOTED OTHERWISE ON THE DWGS., MIN. CONCRETE PROTECTION FOR REINFORCING STEEL SHALL BE AS FOLLOWS;
A. CONCRETE POURED AGAINST EARTH ..... 3"
B. FORMED CONCRETE EXPOSED TO EARTH OR WEATHER;
a) #5 BARS AND SMALLER ..... 1-1/2"
b) ALL BARS LARGER THAN #5 ..... 2"
C. FORMED CONCRETE NOT EXPOSED TO WEATHER OR IN CONTACT WITH EARTH:
a) SLABS AND WALLS..... 3/4"
b) BEAMS: STIRRUPS..... 1-1/2"
MAIN REINF..... 2"
c) COLUMNS:STIRRUPS..... 1-1/2"
MAIN REINF..... 2"
d) SLAB-ON-GRADE ..... 3/4" CLR. FROM TOP
9. ALL REINFORCING BAR BENDS SHALL BE MADE COLD.
10. MIN. REINFORCING STEEL LAP SPLICE SHALL BE 40 BAR DIAM., 1'-8" MIN., U.N.O.
11. REFER TO ARCHITECTURAL, MECHANICAL, PLUMBING AND ELECTRICAL DWGS. FOR GROOVES, CLIPS, INSERTS, PIPES AND PIPE SLEEVES EMBEDDED IN CONCRETE. DO NOT CUT ANY REINFORCING WHICH MAY CONFLICT.
12. EMBEDDED ITEMS SHALL BE SET IN FORMWORK AND COORDINATED WITH OTHER TRADES AND PROPERLY SECURED IN POSITION PRIOR TO PLACING CONCRETE.
13. SHOP DRAWINGS FOR CONC. COLUMNS, BEAMS AND SLABS SHALL BE PROVIDED FOR APROVAL PRIOR TO PLACEMENT OF REINF.

STRUCTURAL STEEL

1. STRUCTURAL STEEL SHALL CONFORM TO ASTM A992, Fy = 50 ksi, U.N.O.
2. TUBE MEMBERS SHALL CONFORM TO ASTM A500, GRADE B OR A1085.
3. PIPE MEMBERS SHALL CONFORM TO ASTM A53, GRADE B OR A1085.
4. BOLTS SHALL CONFORM TO ASTM A307, U.N.O.
5. ANCHOR BOLTS SHALL CONFORM TO ASTM A307, U.N.O.
6. WELDING ELECTRODES SHALL CONFORM TO AWS D1.1, E70XX.
7. FABRICATION AND ERECTION SHALL BE IN COMPLIANCE WITH CURRENT A.I.S.C. SPECIFICATIONS FOR BUILDINGS. SHOP DRAWINGS SHALL BE SUBMITTED TO THE ENGINEER FOR REVIEW PRIOR TO FABRICATION.
8. ALL WELDING SHALL BE DONE BY WELDERS CERTIFIED BY THE L.A. CITY BUILDING DEPARTMENT.
9. ALL WELDS SHALL BE PREQUALIFIED IN CONFORMITY WITH THE CODE FOR WELDING IN BUILDING CONSTRUCTION AWS D1.1.
10. FABRICATION SHALL BE DONE IN SHOPS WHICH COMPLY WITH THE REQUIREMENTS OF THE BUILDING CODE. FABRICATOR SHALL BE L.A. CITY LICENSED.
11. SEE SHEETS S24, S25, & S26 MOMENT FRAME NOTES AND DETAILS.

NOTES CONTINUE: REFER TO DWG. S1.1 & S1.2 FOR MORE GENERAL AND STRUCTURAL NOTES. FOR SMF NOTES & SPECS., SEE SHEETS S24, S25, S26.

STRUCTURAL NOTES (S1.0):

UNLESS NOTED OTHERWISE, THE FOLLOWING SHALL BE TYPICAL:

1. UNLESS NOTED OTHERWISE ON THE ARCHITECTURAL DWGS., ALL NEW EXTERIOR AND INTERIOR STUD WALLS SHALL BE METAL STUDS PER DETAILS 1 TO 14 ON SHEET S4. ALL WALL SILL PLATES BEARING ON CONCRETE SHALL BE CONNECTED THERETO WITH 5/8" DIA. X 12" LONG ANCHOR BOLTS AT 2'-6" CTRS. W/ 2-3/4" CONC. EDGE DISTANCE AND PLACED MIN. 9" FROM WALL ENDS, CORNERS, AND INTERSECTIONS. PROVIDE A MINIMUM OF 2 BOLTS PER SILL PLATE. ALTERNATIVELY, THE TRACKS MAY BE CONN. TO CONC. PER 1/S4.
2. UNLESS NOTED OTHERWISE ON THE STRUCTURAL FRAMING PLAN, THE BUILDING SLAB SHALL BE PART OF 36" DEEP MAT FOUNDATION AS SHOWN ON SHEET S5. THE MISC. GROUND LEVEL FLOOR SHALL BE CAST IN PLACE CONCRETE SALB ON GRADE PER 1/S2 U.N.O.
3. THE ROOF FRAMING SHALL BE METAL DECK PER 8/S3 AS PER ARCH. DWG. AND SHEETS S6 & S7.
4. PROVIDE HEADERS AT OPENINGS IN STUD WALLS PER 3/S4 & 4/S4 RESPECTIVELY.
5. CONNECT PARTITION STUD WALLS PER 2/S4, 5/S4 & 6/S4. TOP OF STUD WALL SHALL BE CONN. TO ROOF ABOVE PER 7/S4 OR PROVIDE ACCEPTABLE EQUIVALENT FLEX TRACK.
6. CONNECT STL. BMS. TO STL. BMS. PER 16/S20, AND PER 14/S20 OR 15/S20 IF ▷ IS SHOWN. U.N.O.
7. SUPPORT STL. BEAMS ON STL. COLUMNS PER 13/S20 OR 14/S20. AND PER 10/S21 IF ▷ IS SHOWN.
8. ALL SMF BEAM TO COL. CONNECTIONS ARE SHOWN THIS WAY ▶ AND SHALL BE PER 1/S2 AND SHALL COMPLY WITH NOTES AND DETAILS ON SHEETS S20, S24, S25, S26.
9. FRAME METAL DECK ROOF DIAPHRAGMS OPENINGS PER 6/S3, 9/S3 & 10/S3.
10. FRAME METAL DECK EDGES PER 7/S3 U.N.O.
11. ALL EXPOSED STEEL CONNECTORS, BOLTS, NUTS, AND WASHERS SHALL BE GALVANIZED OR STAINLESS STEEL.
12. REFER TO ARCHITECTURAL DWGS. FOR ALL ELEVATIONS AND DIMENSIONS NOT NOTED.
13. PROVIDE 3"X3"X3/8" PLATE WASHER AT ALL A.B.'s
14. ALL STUD PARTITIONS OR WALLS OVER 10 FEET HIGH SHALL HAVE W.I. BLOCKING, PREFERABLY AT MID-HEIGHT BUT NOT TO EXCEED INTERVALS OF 8 FT. CONTRACTOR SHALL OBTAIN APPROVAL FROM THE ARCHITECT AND FROM STRUCTURAL ENGINEER OF RECORD FOR ALL CONNECTIONS.
15. DO NOT NOTCH OR DRILL STRUCTURAL MEMBERS EXCEPT WHERE SHOWN IN DETAILS. OBTAIN THE APPROVAL OF THE ARCHITECT FOR ANY HOLES OR NOTCHES NOT DETAILED.
16. ALL SILL PLATES BEARING ON CONCRETE SHALL HAVE FULL BEARING.
17. REFER TO DWG. S1 FOR GENERAL NOTES. REFER TO DWG. S2, S3, AND S4 FOR TYPICAL DETAILS.

1 S1.0 STRUCTURAL NOTES
1" = 1'-0"

Sheet List

Sheet Number	Sheet Name	Current Revision	Current Revision Date
S1.0	STRUCTURAL AND GENERAL NOTES		
S1.1	STRUCTURAL AND GENERAL NOTES		
S1.2	STRUCTURAL AND GENERAL NOTES		
S2	TYPICAL DETAILS		
S3	TYPICAL DETAILS		
S4	TYPICAL DETAILS		
S5	FOUNDATION AND GROUND FLOOR FRAMING PLAN		
S6	MULTI - PURPOSE AND UTILITY BLDG. ROOF FRAMING PLAN		
S7	GYMNASIUM ROOF FRAMING PLAN		
S7.1	GYMNASIUM CANOPY FRAMING PLAN		
S8	MOMENT FRAME ELEVATIONS AND BUILDING SECTIONS		
S9	MOMENT FRAME ELEVATIONS AND BUILDING SECTIONS		
S10	MOMENT FRAME ELEVATIONS AND BUILDING SECTIONS		
S11	MOMENT FRAME ELEVATIONS AND BUILDING SECTIONS		
S12	MULTI-PURPOSE BLDG. SECTIONS		
S13	STRUCTURAL COLUMN SCHEDULE		
S14	STRUCTURAL BEAM SCHEDULE		
S14.1	STRUCTURAL BEAM SCHEDULE		
S14.2	STRUCTURAL BEAM SCHEDULE		
S15	FOUNDATION GRADE BEAM REINF. SCHED. M500-M510		
S16	FOUNDATION GRADE BEAM REINF. SCHED. M511-M552		
S17	FOUNDATION SECTIONS		
S18	FOUNDATION SECTIONS		
S19	SLAB + FDN. SECTIONS AND DETAILS		
S20	TYPICAL STEEL FRAMING DETAILS		
S21	TYPICAL STEEL FRAMING DETAILS		
S22	STEEL FRAMING DETAILS		
S24	SMF QA Standard Plan Sht 1 of 3		
S25	SMF QA Standard Plan Sht 2 of 3		
S26	SMF QA Standard Plan Sht 3 of 3		

BUREAU OF ENGINEERING
OFFICIAL RECORD

THE CITY OF LOS ANGELES OR ITS OFFICERS OR AGENTS SHALL NOT BE RESPONSIBLE FOR THE ACCURACY OR COMPLETENESS OF ELECTRONIC COPIES OF THIS PLAN SHEET.

TTLB TEMPLATE REVISION DATE: 02/2013
SHEET ISSUE DATE: 26 APR 19
FILE PATH: BIM 360://Studio City Recreation Center/SCRC-Structural.rvt

REVISION DATES: (DESIGN STAGE ONLY)

DEPARTMENT OF PUBLIC WORKS
BUREAU OF ENGINEERING
CITY OF LOS ANGELES
ENGINEERING

NO.	REVISION DESCRIPTION	DATE	BY

BUILDING NO. -
INDEX NO. RP-300106

REGISTERED PROFESSIONAL ENGINEER
NASTARAN HOWARD
NO. C-62199
EXP. 09-30-19
CIVIL
STATE OF CALIFORNIA

CITY ENGINEER
DATE: 29 APR. 19

TED ALLEN, PE
ARCHITECTURAL DIVISION
ENGINEER: NAST ENTERPRISES CORP. LIC. NO.: C-62199
DESIGNED BY: H.N.
DRAWN BY: H.N.
CHECKED BY: H.N.
APPROVED BY: MAHMOOD KARIMZADEH, AIA, DEPUTY CITY ENGINEER

CITY OF LOS ANGELES
VERTICAL CONTROL:
HORIZONTAL CONTROL:
SHEET TITLE: STRUCTURAL AND GENERAL NOTES
PROJECT: STUDIO CITY GYMNASIUM
ADDRESS: 12621 RYE STREET, STUDIO CITY, CA 91604

ST Enterprises Corp.
554 S San Vicente Blvd., #202, Los Angeles, CA 90048
Tel: (310) 210 - 3238

WORK ORDER NO.
Project Number
PLAN FILE NO.
DRAWING NO.
S1.0
SHEET 112 OF SHEETS 211

PLOTTED:4/30/2019 5:26:58 PM

GENERAL NOTES FOR STRUCTURAL OBSERVATION:

(1) STRUCTURAL OBSERVATION IS REQUIRED FOR THE STRUCTURAL SYSTEM IN ACCORDANCE WITH THE INFORMATION BULLETIN NO. P/BC 2002-024 STRUCTURAL OBSERVATION IS THE VISUAL OBSERVATION AT THE CONSTRUCTION SITE OF THE ELEMENTS AND CONNECTIONS OF THE STRUCTURAL SYSTEM AT SIGNIFICANT CONSTRUCTION STAGES AND THE COMPLETE STRUCTURE FOR GENERAL CONFORMANCE TO THE APPROVED PLANS AND SPECIFICATIONS. STRUCTURAL OBSERVATION DOES NOT WAIVE THE RESPONSIBILITY FOR THE INSPECTIONS REQUIRED OF THE BUILDING INSPECTOR OR THE DEPUTY INSPECTOR.

(2) THE OWNER SHALL EMPLOY A STATE OF CALIFORNIA REGISTERED CIVIL OR STRUCTURAL ENGINEER OR LICENSED ARCHITECT TO PERFORM THE STRUCTURAL OBSERVATION. THE DEPARTMENT OF BUILDING AND SAFETY (LADBS) RECOMMENDS THE USE OF THE ENGINEER OR ARCHITECT RESPONSIBLE FOR THE STRUCTURAL DESIGN WHO ARE INDEPENDENT OF THE CONTRACTOR.

(3) THE STRUCTURAL OBSERVER SHALL PROVIDE EVIDENCE OF EMPLOYMENT BY THE OWNER OR THE OWNER'S REPRESENTATIVE. A LETTER FROM THE OWNER, THE OWNER'S REPRESENTATIVE, OR A COPY OF THE AGREEMENT FOR SERVICES SHALL BE SENT TO THE BUILDING INSPECTOR BEFORE THE FIRST SITE VISIT.

(4) THE OWNER OR OWNER'S REPRESENTATIVE SHALL COORDINATE AND CALL FOR A MEETING BETWEEN THE ENGINEER OR ARCHITECT RESPONSIBLE FOR THE STRUCTURAL DESIGN, STRUCTURAL OBSERVER, CONTRACTOR, AFFECTED SUBCONTRACTORS AND DEPUTY INSPECTORS. THE PURPOSE OF THE MEETING SHALL BE TO IDENTIFY THE MAJOR STRUCTURAL ELEMENTS AND CONNECTIONS THAT AFFECT THE VERTICAL AND LATERAL LOAD SYSTEMS OF THE STRUCTURE AND TO REVIEW SCHEDULING OF THE REQUIRED OBSERVATIONS. A RECORD OF THE MEETING SHALL BE INCLUDED IN THE FIRST OBSERVATION REPORT SUBMITTED TO THE BUILDING INSPECTOR.

(5) THE STRUCTURAL OBSERVER SHALL PERFORM SITE VISITS AT THOSE STEPS IN THE PROGRESS OF THE WORK THAT ALLOW FOR CORRECTION OF DEFICIENCIES WITHOUT SUBSTANTIAL EFFORT OR UNCOVERING OF THE WORK INVOLVED. AT A MINIMUM, THE LISTED SIGNIFICANT CONSTRUCTION STAGES ON THE FOLLOWING STRUCTURAL OBSERVATION/SIGNIFICANT CONSTRUCTION STAGES TABLE REQUIRE A SITE VISIT AND AN OBSERVATION REPORT FROM THE STRUCTURAL OBSERVER.

(6) THE STRUCTURAL OBSERVER SHALL PREPARE A REPORT OF THE STRUCTURAL OBSERVATION REPORT FORM IN/FORM.08 (PART 1) FOR EACH SIGNIFICANT STAGE OF CONSTRUCTION OBSERVED. THE ORIGINAL OF THE STRUCTURAL OBSERVATION REPORT SHALL BE SENT TO THE BUILDING INSPECTOR'S OFFICE AND SHALL BE SIGNED AND SEALED (WET STAMP) BY THE RESPONSIBLE STRUCTURAL OBSERVER. ONE COPY OF THE OBSERVATION REPORT SHALL BE ATTACHED TO THE APPROVED PLANS. THE COPY ATTACHED TO THE PLANS SHALL BE SIGNED AND SEALED (WET STAMP) BY THE RESPONSIBLE STRUCTURAL OBSERVER OR THEIR DESIGNEE COPIES OF THE REPORT SHALL ALSO BE GIVEN TO THE OWNER, CONTRACTOR, AND DEPUTY INSPECTOR. ANY DEFICIENCY NOTED ON THE OBSERVATION REPORT WILL BECOME THE RESPONSIBILITY OF THE STRUCTURAL ENGINEER OF RECORD TO VERIFY ITS COMPLETION BY HIM (HER), OR BY A REGISTERED DEPUTY INSPECTOR AT THE DISCRETION OF THE STRUCTURAL OBSERVER.

(7) A FINAL OBSERVATION REPORT AND THAT OF THE REGISTERED DEPUTY INSPECTOR MUST BE SUBMITTED WHICH SHOWS THAT ALL OBSERVED DEFICIENCIES WERE RESOLVED, AND STRUCTURAL SYSTEM GENERALLY CONFORMS WITH THE APPROVED PLANS AND SPECIFICATIONS. THE DEPARTMENT OF BUILDING AND SAFETY (LADBS) WILL NOT ACCEPT THE STRUCTURAL WORK WITHOUT THIS FINAL OBSERVATION REPORT AND THAT OF THE REGISTERED DEPUTY INSPECTOR (WHEN PROVIDED) AND THE CORRECTION OF SPECIFIC DEFICIENCIES NOTED DURING NORMAL BUILDING INSPECTION.

(8) THE STRUCTURAL OBSERVER SHALL PROVIDE THE ORIGINAL STAMPED AND SIGNED STRUCTURAL OBSERVATION REPORT TO THE CITY OF LOS ANGELES DEPARTMENT OF BUILDING AND SAFETY BUILDING INSPECTOR.

(9) WHEN THE OWNER ELECTS TO CHANGE THE STRUCTURAL OBSERVER OF RECORD, THE OWNER SHALL:
A) NOTIFY THE BUILDING INSPECTOR IN WRITING BEFORE THE NEXT INSPECTION BY SUBMITTING COMPLETED "STRUCTURAL OBSERVATION PROGRAM AND DESIGNATION OF THE STRUCTURAL OBSERVER" FORM IN/FORM.08 (PART 2)
B) CALL AN ADDITIONAL PRECONSTRUCTION MEETING, AND
C) FURNISH THE REPLACEMENT STRUCTURAL OBSERVER WITH A COPY OF ALL PREVIOUS OBSERVATION REPORTS. THE REPLACEMENT STRUCTURAL OBSERVER SHALL APPROVE THE CORRECTION OF THE ORIGINAL OBSERVED DEFICIENCIES UNLESS OTHERWISE APPROVED BY PLAN CHECK SUPERVISION. THE POLICY OF THE DEPARTMENT SHALL BE TO CORRECT ANY PROPERTY NOTED DEFICIENCIES WITHOUT CONSIDERATION OF THEIR SOURCE.

(10) THE ENGINEER OR ARCHITECT OF RECORD SHALL DEVELOP ALL CHANGES RELATING TO THE STRUCTURAL SYSTEMS. THE BUILDING DEPARTMENT SHALL REVIEW AND APPROVE ALL CHANGES TO THE APPROVED PLANS AND SPECIFICATIONS.

Los Angeles Regional Uniform Code Program
Committee I-3: Structural Observation

STRUCTURAL OBSERVATION PROGRAM
AND DESIGNATION OF THE
STRUCTURAL OBSERVER

PROJECT ADDRESS: 12621 Rye Street PERMIT APPL. NO.: _____
Description of Work: Studio City Gymnasium
Owner: City of Los Angeles Architect: _____ Engineer: Hooman Nastarin

STRUCTURAL OBSERVATION (only checked items are required)			
Firm or Individual to be responsible for the Structural Observation: Name: HOOMAN NASTARIN Phone: (310)268 - 9419 Calif. Registration:			
FOUNDATION	**WALL**	**FRAME**	**DIAPHRAGM**
☐ Footing, Stem Walls, Piers	☐ Concrete	☑ Steel Moment Frame	☐ Concrete
☑ Mat Foundation	☐ Masonry	☐ Steel Braced Frame	☑ Steel Deck
☐ Caisson, Piles, Grade Beams	☐ Wood	☐ Concrete Moment Frame	☐ Wood
☐ Step'g/Retain'g Foundation, Hillside Special Anchors	☐ Others:	☐ Others:	☐ Others:
☐ Others:			

DECLARATION BY OWNER
I, the Owner of the project, declare that the above listed firm or individual is hired **by me** to be the Structural Observer.

Signature Date

DECLARATION BY ARCHITECT OR ENGINEER OF RECORD (required if the Structural Observer is different from the Architect or Engineer of Record)
I, the Architect or Engineer of record for the project, declare that the above listed firm or individual is designated by me to be responsible for the Structural Observation.

Signature License No.: Date

IN/Form.08 (Part 2) (Rev. 05/13/17)

STATEMENT OF SPECIAL INSPECTIONS:

THIS STATEMENT OF SPECIAL INSPECTIONS IS SUBMITTED IN FULFILLMENT OF THE REQUIREMENTS OF CBC SECTIONS 1704 AND 1705. SPECIAL INSPECTIONS AND TESTING SHALL BE PERFORMED IN ACCORDANCE WITH THE APPROVED PLANS AND SPECIFICATIONS, THIS STATEMENT AND CBC SECTIONS 1704, 1705, 1707, AND 1708. THE SCHEDULE OF SPECIAL INSPECTIONS SUMMARIZES THE SPECIAL INSPECTIONS AND TESTS REQUIRED. SPECIAL INSPECTORS SHALL REFER TO THE APPROVED PLANS AND SPECIFICATIONS FOR DETAILED SPECIAL INSPECTION REQUIREMENTS. ANY ADDITIONAL TESTS AND INSPECTIONS REQUIRED BY THE APPROVED PLANS AND SPECIFICATIONS SHALL ALSO BE PERFORMED. INTERIM REPORTS SHALL BE SUBMITTED TO THE BUILDING OFFICIAL AND THE REGISTERED DESIGN PROFESSIONAL IN RESPONSIBLE CHARGE IN ACCORDANCE WITH CBC SECTION 1704.1.2. A FINAL REPORT OF SPECIAL INSPECTIONS DOCUMENTING REQUIRED SPECIAL INSPECTIONS, TESTING AND CORRECTION OF ANY DISCREPANCIES NOTED IN THE INSPECTIONS SHALL BE SUBMITTED PRIOR TO ISSUANCE OF A CERTIFICATE OF USE AND OCCUPANCY (SECTION 1704.1.2).

THE OWNER RECOGNIZES HIS OR HER OBLIGATION TO ENSURE THAT THE CONSTRUCTION COMPLIES WITH THE APPROVED PERMIT DOCUMENTS AND TO IMPLEMENT THIS PROGRAM OF SPECIAL INSPECTIONS. IN PARTIAL FULFILLMENT OF THESE OBLIGATIONS, THE OWNER SHALL RETAIN AND DIRECTLY PAY FOR THE SPECIAL INSPECTIONS AS REQUIRED IN CBC SECTION 1704.1. THE CONTRACTOR SHALL SUBMIT A WRITTEN STATEMENT OF RESPONSIBILITY TO THE LADBS INSPECTORS AND TO THE OWNER PRIOR TO COMMENCEMENT OF WORK PER SECTION 1709.1

SCHEDULE OF INSPECTION, TESTING AGENCIES, AND INSPECTORS:
THE FOLLOWING ARE THE TESTING AGENCIES AND SPECIAL INSPECTORS THAT WILL BE RETAINED TO CONDUCT TESTS AND INSPECTION ON THIS PROJECT. PROVIDE FIRM NAME, RESPONSIBILITY, ADDRESS, TELEPHONE, AND E-MAIL OF THE RESPONSIBLE PERSON (S) FOR THE FOLLOWING FIELDS:

1. WELDING
   FIELD WELDED STRUCTURAL STEEL CONNECTIONS.
   REINFORCING STEEL.
2. HIGH STRENGTH BOLTING
3. COMPACTED FILL
4. CAST-IN-PLACE ANCHOR BOLTS
5. EXPANSION TYPE ANCHOR BOLTS AND EPOXY GROUTED BOLTS
6. SIMPSON STRONG WALL SHEAR WALL COMPONENTS
7. SPRAY ON FIRE PROOFING
8. CONCRETE STRENGTH f'c>2500 PSI
9. SHEAR WALL NAILING WHERE NAILS ARE SPACED LESS THAN 4"

ITEMS SUBJECT TO THE REQUIREMENTS: SEISMIC REQUIREMENTS (SECTION 1705.3.1), WIND REQUIREMENTS (SECTION 1705.4.1):

1707.3 - STRUCTURAL WOOD: FINAL INSPECTION OF ALL NEW AND EXISTING NAILS, SCREWS & BOLTS.

CONTINUOUS INSPECTION

CONTINUOUS INSPECTIONS BY A REGISTERED DEPUTY BUILDING INSPECTOR, APPROVED BY THE ARCHITECT AND THE AUTHORITY HAVING JURISDICTION, SHALL BE REQUIRED FOR THE FOLLOWING TYPES OF WORK. SEE PROJECT SPECIFICATIONS FOR SPECIFIC REQUIREMENTS. SPECIAL INSPECTIONS SHALL NOT BE REQUIRED WHEN THE WORK IS DONE ON THE PREMISES OF A FABRICATOR REGISTERED AND APPROVED BY THE BUILDING OFFICIAL TO PERFORM SUCH WORK WITHOUT SPECIAL INSPECTION.

1. WELDING
   FIELD WELDED STRUCTURAL STEEL CONNECTIONS.
   REINFORCING STEEL.
2. HIGH STRENGTH BOLTING
3. COMPACTED FILL
4. CAST-IN-PLACE ANCHOR BOLTS
5. EXPANSION TYPE ANCHOR BOLTS AND EPOXY GROUTED BOLTS
6. SIMPSON STRONG WALL SHEAR WALL COMPONENTS

P/BC 2017-024

STRUCTURAL OBSERVATION/ SIGNIFICANT CONSTRUCTION STAGES (Only Checked items are required)		
Architect or Engineer of Record for the project to be responsible for the "Structural Observation": Name: Hooman Nastarin ☐ Licensed Architect ☑ Registered Engineer Phone: (310) 268 - 9419 California Registration Number: C62199		
Construction Stage	**Construction Type**	**Elements/Connections to be observed**
Foundation	☑ Footing, Stem Walls, Piers ☐ Mat Foundation ☐ Caisson, Pile, Grade beams ☐ Stepping/Retaining Foundation, Hillside Special Anchors ☐ Others:	ALL FOOTINGS
Wall	☐ Concrete ☐ Masonry ☑ Wood ☐ Others:	ALL WALLS
Frame	☑ Steel Moment Frame ☐ Steel Braced Frame ☐ Concrete Moment Frame ☐ Others:	ALL MOMENT FRAMES
Diaphragm	☐ Concrete ☑ Steel Deck ☐ Wood ☐ Others:	ALL DIAPHRAGMS
Others		

DECLARATION BY OWNER OR OWNER'S REPRESENTATIVE
I, ☐ the owner of the project ☐ the owner's representative, declare that the above listed firm or individual is hired by me to be the Structural Observer.

Signature Of Structural Observer **Date**

(Rev. 06/19/17)

As a covered entity under Title II of the Americans with Disabilities Act, the City of Los Angeles does not discriminate on the basis of disability and, upon request, will provide reasonable accommodation to ensure equal access to its programs, services and activities.

CITY OF LOS ANGELES DEPARTMENT OF BUILDING AND SAFETY

CITY OF LOS ANGELES D.B.S. NOTES:

UNLESS NOTED OTHERWISE, THE FOLLOWING SHALL BE TYPICAL:

1. CONTRACTORS RESPONSIBLE FOR THE CONSTRUCTION OF A WIND OR SEISMIC FORCE RESISTING SYSTEM/COMPONENT LISTED IN THE "STATEMENT OF SPECIAL INSPECTION" SHALL SUBMIT A WRITTEN STATEMENT OF RESPONSIBILITY TO THE S.M. DBS INSPECTORS AND THE OWNER PRIOR TO THE COMMENCEMENT OF WORK ON SUCH SYSTEM OR COMPONENT PER SEC 1709.1
2. CONTINUOUS SPECIAL INSPECTION BY A REGISTERED DEPUTY INSPECTOR IS REQUIRED FOR FIELD WELDING, CONCRETE STRENGTH F'C > 2,500 PSI, HIGH STRENGTH BOLTING, SPRAYED-ON FIREPROOFING. ENGINEERED MASONRY, HIGH-LIFT GROUTING, PRE-STRESSED CONCRETE, HIGH LOAD DIAPHRAGMS AND SPECIAL MOMENT-RESISTING CONCRETE FRAMES. (1704 & CHAPTERS 19, 21, & 22)
3. FOUNDATION SILLS SHALL BE NATURALLY DURABLE OR PRESERVATIVE-TREATED WOOD. (2304.11.2.4)
4. FIELD WELDING TO BE DONE BY WELDERS CERTIFIED BY THE LADBS FOR (STRUCTURAL STEEL) (REINFORCING STEEL) (LIGHT GAUGE STEEL). CONTINUOUS INSPECTION BY A DEPUTY INSPECTOR IS REQUIRED.
5. SHOP WELDS MUST BE PERFORMED IN A LADBS LICENSED FABRICATOR'S SHOP.
6. LADBS LICENSED FABRICATOR IS REQUIRED FOR (TRUSSES), (STRUCTURAL STEEL)....
7. GLUE LAM BEAMS MUST BE FABRICATED IN A LADBS LICENSED SHOP. IDENTIFY GRADE SYMBOL AND LAMINATION SPECIES PER 2012 NDS SUPPLEMENT TABLE 5-A.
8. PROVIDE LEAD HOLE 40% - 70% OF THREADED SHANK DIA. AND FULL DIA. FOR SMOOTH SHANK PORTION. (2012NDS)
9. PERIODIC SPECIAL INSPECTION IS REQUIRED FOR WOOD SHEAR WALLS, SHEAR PANELS, AND DIAPHRAGMS, INCLUDING NAILING, BOLTING, ANCHORING, AND OTHER FASTENING TO COMPONENTS OF THE SEISMIC FORCE RESISTING SYSTEM. SPECIAL INSPECTION BY A DEPUTY INSPECTOR IS REQUIRED WHERE THE FASTENER SPACING OF THE SHEATHING IS 4 INCHES ON CENTER OR LESS.
10. A COPY OF THE LOS ANGELES RESEARCH REPORT AND/OR CONDITIONS OF LISTING SHALL BE MADE AVAILABLE AT THE JOB SITE.

NOTES CONTINUE: REFER TO DWG. S1.0 FOR BALANCE OF GENERAL AND STRUCTURAL NOTES.

BUREAU OF ENGINEERING
OFFICIAL RECORD

CITY OF LOS ANGELES DEPARTMENT OF PUBLIC WORKS
BUREAU OF ENGINEERING
ENGINEERING
CITY OF LOS ANGELES

NO.	REVISION DESCRIPTION	DATE	BY

BUILDING NO. -
INDEX NO. RP-300106

REGISTERED PROFESSIONAL ENGINEER HOOMAN NASTARIN NO. C-62199 EXP. 09-30-19 CIVIL STATE OF CALIFORNIA

TED ALLEN, PE
CITY ENGINEER
DATE: 29 APR. 19

ARCHITECTURAL DIVISION
ENGINEER: NAST ENTERPRISES CORP. LIC. NO: C-62199
DESIGNED BY: H.N.
DRAWN BY: H.N.
CHECKED BY: H.N.
APPROVED BY: MAHMOOD KARIMZADEH, AIA, DEPUTY CITY ENGINEER 29 APR. 19

VERTICAL CONTROL:
HORIZONTAL CONTROL:
SHEET TITLE: STRUCTURAL AND GENERAL NOTES
PROJECT: STUDIO CITY GYMNASIUM
ADDRESS: 12621 RYE STREET, STUDIO CITY, CA 91604

ST Enterprises Corp.
524 S San Vicente Blvd., #202, Los Angeles, CA 90048 Tel: (310) 210 - 3238

WORK ORDER NO. Project Number
PLAN FILE NO.
DRAWING NO. S1.1
SHEET 113 OF SHEETS 211

PLOTTED:4/30/2019 5:27:05 PM

THE CITY OF LOS ANGELES OR ITS OFFICERS OR AGENTS SHALL NOT BE RESPONSIBLE FOR THE ACCURACY OR COMPLETENESS OF ELECTRONIC COPIES OF THIS PLAN SHEET.

TTLB TEMPLATE REVISION DATE: 02/2013
SHEET ISSUE DATE: 26 APR. 19
FILE PATH: BIM 360://Studio City Recreation Center/SCRC-Structural.rvt

REVISION DATES (DESIGN STAGE ONLY)

THE CITY OF LOS ANGELES OR ITS OFFICERS OR AGENTS SHALL NOT BE RESPONSIBLE FOR THE ACCURACY OR COMPLETENESS OF ELECTRONIC COPIES OF THIS PLAN SHEET.

TTLB TEMPLATE REVISION DATE: 02/2013
SHEET ISSUE DATE: 26 APR. 19
FILE PATH: BIM 360://Studio City Recreation Center/SCRC-Structural.rvt

REVISION DATES (DESIGN STAGE ONLY)

MASONRY (CONCRETE BLOCK)

1. CONCRETE BLOCK SHALL BE HOLLOW LOAD-BEARING CONCRETE MASONRY UNITS CONFORMING TO ASTM C90 GRADE N. USE OPEN END UNITS FOR STACKED BOND PATTERN AND BOND BEAM UNITS AT HORIZONTAL REINFORCING.
2. CEMENT SHALL BE AS SPECIFIED FOR CONCRETE.
3. REINFORCEMENT SHALL BE AS SPECIFIED FOR CONCRETE; GRADE 60.
4. MORTAR MIX SHALL CONFORM TO REQUIREMENTS FOR TYPE S, AND PROJECT SPECIFICATIONS. MORTAR SHALL ATTAIN A COMPRESSIVE STRENGTH OF 1,800 PSI AT 28 DAYS.
5. GROUT SHALL CONFORM TO THE REQUIREMENTS OF THE BUILDING CODE FOR COARSE GROUT. GROUT SHALL ATTAIN A COMPRESSIVE STRENGTH OF 2,000 PSI AT 28 DAYS.
6. ADMIXTURES SHALL BE ADDED TO MORTAR AND GROUT IN ACCORDANCE WITH MANUFACTURER'S RECOMMENDATIONS.
7. PROVIDE A MINIMUM OF 1/2 INCH GROUT BETWEEN MAIN REINFORCING AND MASONRY UNITS.
8. LOW-LIFT CONSTRUCTION; MAXIMUM GROUT POUR HEIGHT IS 4 FEET.
9. ALL CELLS IN CONCRETE BLOCKS SHALL BE FILLED SOLIDLY WITH GROUT.
10. CELLS SHALL BE IN VERTICAL ALIGNMENT. DOWELS SHALL BE SET TO ALIGN WITH CORES CONTAINING REINFORCING STEEL.
11. REINFORCING STEEL SPLICES SHALL BE 48 BAR DIA. MINIMUM.

METAL STUDS

1. ALL METAL STUDS INCLUDING TRACKS, BRIDGING, HEADERS, AND BRACING SHALL BE OF THE SIZE AND TYPE SHOWN ON THE PLANS.
2. DESIGNATIONS REFER TO COMPONENTS AS LISTED IN THE CURRENT CATALOG AT THE METAL STUD MANUFACTURERS ASSOCIATION (ICBO ER NO. 4943 P) SEE BELOW
3. SUBSTITUTIONS SHALL BE SUBJECT TO REVIEW AND APPROVAL BY THE ARCHITECT.
4. 14 GAUGE AND 16 GAUGE COMPONENTS SHALL BE COLD FORMED STEEL CONFORMING TO ASTM A 653 SS GRADE 50, CLASS 1 OR 3, OR ASTM A 1011 SS GRADE 50, W/ MINIMUM 50,000 PSI YIELD POINT.
5. 18 GAUGE AND LIGHTER COMPONENTS SHALL BE COLD FORMED STEEL CONFORMING TO ASTM A653 SS GRADE 33 OR ASTM A1011 SS GRADE 33, W/ MINIMUM 33,000 PSI YIELD POINT.
6. UNLESS NOTED OTHERWISE, ALL CONNECTIONS SHALL BE MADE WITH #8 WAFER HEAD SELF-TAPPING SCREWS AND IN ACCORDANCE WITH THE MANUFACTURER ASSOCIATION RECOMMENDATIONS.
7. ALL FIELD WELDING SHALL BE SUBJECT TO CONTINUOUS INSPECTION BY A REGISTERED DEPUTY BLDG. INSPECTOR.
8. ALL MEMBERS EXPOSED TO THE WEATHER SHALL BE GALVANIZED IN CONFORMANCE WITH ASTM A653.
9. NOT USED.
10. NOT USED.
11. PROPERTIES SHALL COMPLY WITH THE FOLLOWING:

STUD SIZE	CATALOG DESIGNATION	STRUCT. PROPERTIES Ixx - in4	Sxx-in3
2-1/2"X20GA.	250S137-33	0.203	0.163
2-1/2"X18GA.	250S137-43	0.261	0.208
3-1/2"X18GA.	350S162-43	0.654	0.374
3-5/8"X20GA.	362S137-33	0.479	0.264
3-5/8"X18GA.	362S137-43	0.616	0.340
3-5/8"X16GA.	362S137-54	0.756	0.417
3-5/8"X14GA.	362S137-68	0.922	0.509
4"X20GA.	400S137-33	0.603	0.301
4"X18GA.	400S137-43	0.776	0.388
4"X16GA.	400S137-54	0.953	0.477
4"X14GA.	400S137-68	1.165	0.582
6"X20GA.	600S137-33	1.582	0.527
6"X18GA.	600S137-43	2.042	0.681
6"X16GA.	600S137-54	2.518	0.839
6"X14GA.	600S137-68	3.094	1.031
8"X20GA.	800S137-33	3.198	0.7997
8"X18GA.	800S137-43	4.134	1.033
8"X16GA.	800S137-54	5.110	1.277
8"X14GA.	800S137-68	6.303	1.576

12. STUD CONNECTIONS TO RUNNER TRACKS AND STRUCTURAL STEEL MEMBERS SHALL BE WITH NO.8 SELF-DRILLING, SELF-TAPPING SCREWS.
13. TRACK CONNECTIONS TO CONCRETE AND TO THE UNDERSIDE OF METAL FLOOR DECK SHALL BE MADE WITH WITH HILTI X-DN1, OR EQUIVALENT LOW VELOCITY POWDER DRIVEN FASTENERS AT 12 INCH CENTERS MAXIMUM SPACING.
14. TRACKS SHALL BE UNPUNCHED AND OF THE SAME GAUGE AS STUDS, 18GA.

NOTES CONTINUE: REFER TO DWG. S1.0 FOR BALANCE OF GENERAL AND STRUCTURAL NOTES.

BUREAU OF ENGINEERING OFFICIAL RECORD

ST Enterprises Corp.
554 S San Vicente Blvd. #202, Los Angeles, CA 90048 Tel: (310) 210 - 3238

CITY OF LOS ANGELES DEPARTMENT OF PUBLIC WORKS BUREAU OF ENGINEERING

ENGINEERING CITY OF LOS ANGELES

NO.	REVISION DESCRIPTION	DATE	BY

BUILDING NO. -

INDEX NO. RP-300106

REGISTERED PROFESSIONAL ENGINEER MAHMOOD KARIMZADEH NO. C-62199 Exp. 09-30-19 CIVIL STATE OF CALIFORNIA

CITY ENGINEER

DATE:	29 APR. 19
ENGINEER:	TED ALLEN, PE
	ARCHITECTURAL DIVISION
LIC. NO.: C-62199	NAST ENTERPRISES CORP.
DESIGNED BY:	H.N.
DRAWN BY:	H.N.
CHECKED BY:	H.N.
APPROVED BY:	MAHMOOD KARIMZADEH, AIA, DEPUTY CITY ENGINEER
	29 APR. 19

VERTICAL CONTROL:
HORIZONTAL CONTROL:

SHEET TITLE: STRUCTURAL AND GENERAL NOTES

PROJECT: STUDIO CITY GYMNASIUM

ADDRESS: 12621 RYE STREET, STUDIO CITY, CA 91604

WORK ORDER NO. Project Number
PLAN FILE NO.
DRAWING NO. S1.2
SHEET 114 OF SHEETS 211

PLOTTED:4/30/2019 5:27:06 PM

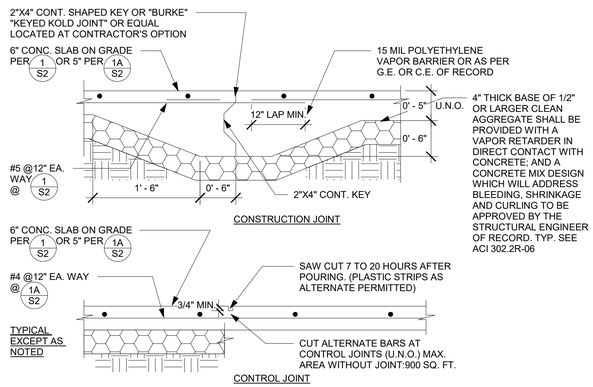

1 S2-1 CONC. SLAB ON GRADE
1" = 1'-0"

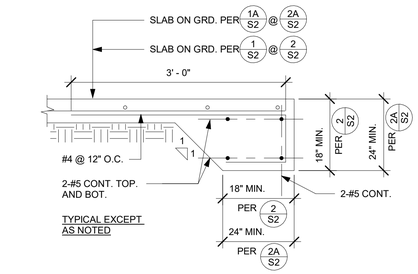

2 S2-2 MISC. SLAB ON GRADE END DETAIL
1" = 1'-0"

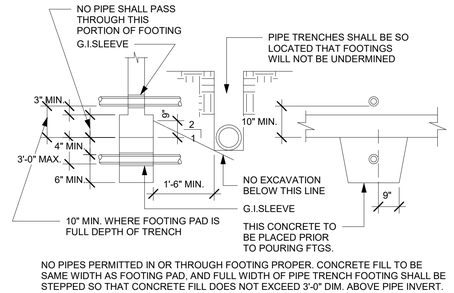

NO PIPES PERMITTED IN OR THROUGH FOOTING PROPER. CONCRETE FILL TO BE SAME WIDTH AS FOOTING PAD, AND FULL WIDTH OF PIPE TRENCH FOOTING SHALL BE STEPPED SO THAT CONCRETE FILL DOES NOT EXCEED 3'-0" DIM. ABOVE PIPE INVERT.

3 S2-3 PIPE AND TRENCH LOCATION
1" = 1'-0"

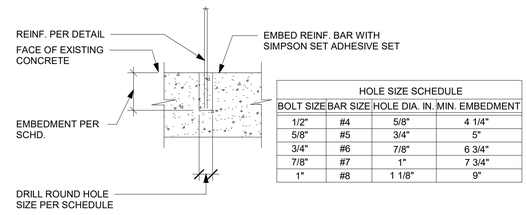

HOLE SIZE SCHEDULE			
BOLT SIZE	BAR SIZE	HOLE DIA. IN.	MIN. EMBEDMENT
1/2"	#4	5/8"	4 1/4"
5/8"	#5	3/4"	5"
3/4"	#6	7/8"	6 3/4"
7/8"	#7	1"	7 3/4"
1"	#8	1 1/8"	9"

NOTES:
1. SIMPSON SET-XP ADHESIVE SET SHALL BE AN EPOXY ADHESIVE AS MANUFACTURED BY SIMPSON STRONG TIE CO. INC OF PLEASANTON CA.
2. DRILL HOLE AND CLEAN PER ICC REPORT ESR-2508, LARR 25744.
3. MIX AND PLACE EPOXY PER ICC REPORT ESR-2508, LARR 25744.
4. REINFORCING BARS SHALL BE RIGIDLY SUPPORTED FOR A MINIMUM OF 1-1/2 HOURS AFTER EPOXY IS PLACED.
5. CONCRETE SHALL NOT BE PLACED FOR AT LEAST 24 HOURS FOLLOWING PLACEMENT OF GROUT.
6. EQUIVALENT EPOXY ADHESIVES MAY BE USED SUBJECT TO THE ENGINEER'S ACCEPTANCE AND PROVIDED THAT THE SUBSTITUTED ADHESIVE HAS CURRENT ICBO. APPROVAL.

4 S2-4 TYP. DOWEL EMBEDMENT
1" = 1'-0"

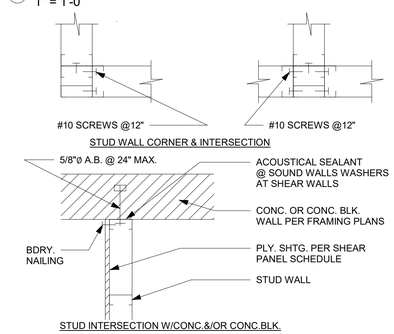

5 S2-5 WALL FRAMING AND CORNER
1" = 1'-0"

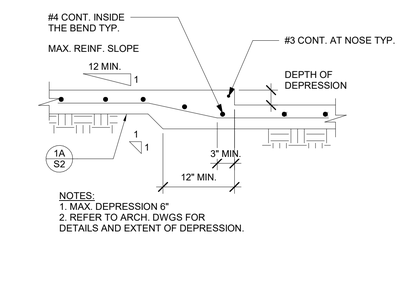

NOTES:
1. MAX. DEPRESSION 6"
2. REFER TO ARCH. DWGS FOR DETAILS AND EXTENT OF DEPRESSION.

6 S2-6 SLAB ON GRADE DETAIL
1" = 1'-0"

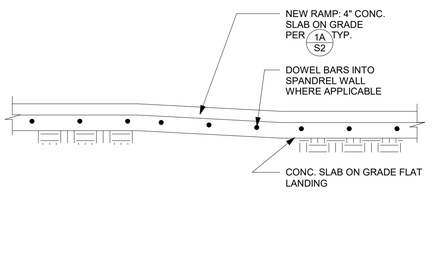

7 S2-7 SLAB/RAMP ON GRADE DETAIL
1" = 1'-0"

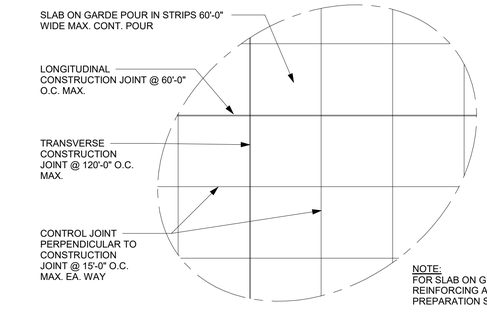

NOTE:
FOR SLAB ON GRADE THICKNESS, REINFORCING AND SUBGRADE PREPARATION SEE PLAN

8 S2-8 TYP. JOINT LAY-OUT
1" = 1'-0"

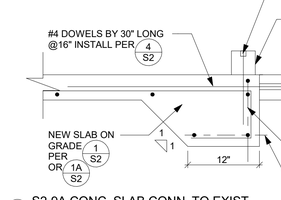

9 S2-9 CONC. SLAB EDGE DETAIL
1" = 1'-0"

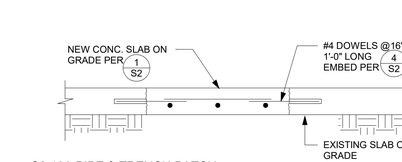

10A S2-10A PIPE & TRENCH PATCH
1" = 1'-0"

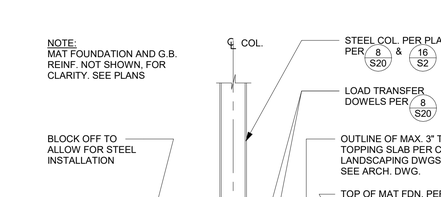

11 S2-11 STL. COL. CONN. FOR SMF & OMF
1/2" = 1'-0"

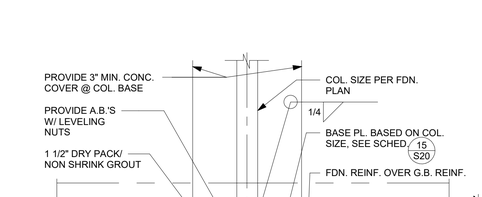

12 S2-12 FOOTING & BASE DETAIL AT POSTS
1" = 1'-0"

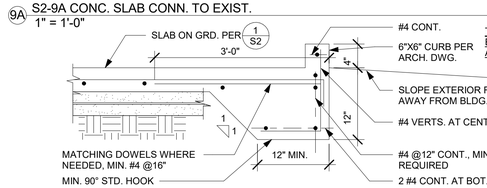

DIA. OF BOLTS	MIN. EMBEDMENT IN.	
IN.	CONCRETE	MASONRY
1/2	4	4
5/8	4	6
3/4	5	6
7/8	5	6
1	7	7
1 1/8	8	8
1 1/4	12	-

13 S2-13 BOLT EMBEDMENT SCHEDULE
1" = 1'-0"

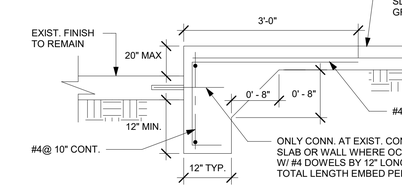

MAIN REINF.	MIN. BEND RADIUS
FOR #3 TO #7	D=6d
FOR #8 TO #10	D=8d
FOR #11 TO #18	D=10d

NOTE:
1. REFER TO SHEET S1, CONC. NOTES 6, 7 & 8.
2. 2. ALL BENDS SHALL BE MADE COLD.

* MULTIPLY LENGTHS SHOWN BY 1.3 FOR HORIZONTAL BARS WITH MORE THAN 12" OF CONC. CAST BELOW THE BARS, EXCEPT IN WALLS.

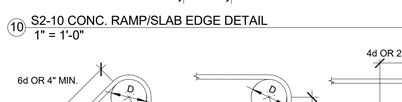

NOTE: ALL HOOKS, BENDS, & LAPS SHALL BE AS INDICATED UNLESS SPECIFICALLY NOTED ON DWG. DETAIL. FOR LIGHT WEIGHT CONC., MULTIPLY VALUE FROM TABLE BY 1.3. SEE GENERAL NOTES REINFORCING NOTE 3 FOR DOWELS.

14 S2-14 REINF. DETAILING
1" = 1'-0"

REINF. SCHEDULE			
MARK	REINF. LENGTH & WIDTH	REINF.	NOTES
A	2'-0" X 2'-0"	4-#4 EA. WAY	HSS4X POSTS
B	2'-6" X 2'-6"	5-#4 EA. WAY	HSS6X POSTS
C	3'-0" X 3'-0"	5-#5 EA. WAY	W12X &14 SMF COLS.
D	3'-6" X 3'-6"	5-#5 EA. WAY	W12X &14 POSTS
E	4'-0" X 4'-0"	5-#5 EA. WAY	HSS8X &12X OMF COLS.
F	5'-0" X 5'-0"	6-#6 EA. WAY	N/A
G	5'-6" X 5'-6"	7-#6 EA. WAY	N/A
H	6'-0" X 6'-0"	8-#6 EA. WAY	W21X SMF COLS.

NOTE:
SEE DETAIL 11/S2 AND/OR 12/S2

15 S2-15 FOOTING REINF. SCHED.
1" = 1'-0"

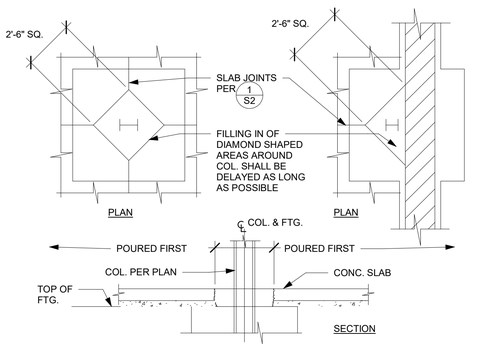

16 S2-16 CONC. SLAB ON GRD. DET.
1" = 1'-0"

BUREAU OF ENGINEERING
OFFICIAL RECORD

THE CITY OF LOS ANGELES OR ITS OFFICERS OR AGENTS SHALL NOT BE RESPONSIBLE FOR THE ACCURACY OR COMPLETENESS OF ELECTRONIC COPIES OF THIS PLAN SHEET.

TTLB TEMPLATE REVISION DATE: 02/2013
SHEET ISSUE DATE: 26 APR 19
FILE PATH: BIM 360://Studio City Recreation Center/SCRC-Structural.rvt

REVISION DATES:
(DESIGN STAGE ONLY)

BUREAU OF PUBLIC WORKS
DEPARTMENT OF ENGINEERING
CITY OF LOS ANGELES
ENGINEERING

NO.	REVISION DESCRIPTION	DATE	BY

BUILDING NO. -
INDEX NO. RP-300106

REGISTERED PROFESSIONAL ENGINEER
HOWARD WAI KAI LIN
NO. C-62199
EXP. 09-30-19
CIVIL
STATE OF CALIFORNIA

CITY ENGINEER
DATE: 29 APR. 19
VERTICAL CONTROL:
HORIZONTAL CONTROL:
SHEET TITLE: TYPICAL DETAILS
PROJECT: STUDIO CITY GYMNASIUM
ADDRESS: 12621 RYE STREET, STUDIO CITY, CA 91604

TED ALLEN, PE
ARCHITECTURAL DIVISION
ENGINEER: NAST ENTERPRISES CORP. LIC. NO: C-62199
DESIGNED BY: H.N.
DRAWN BY: H.N.
CHECKED BY: H.N.
APPROVED BY: MAHMOOD KARIMZADEH, AIA, DEPUTY CITY ENGINEER

ST Enterprises Corp.
524 S San Vicente Blvd., #202, Los Angeles, CA 90048
Tel: (310) 210 - 3238

WORK ORDER NO.
Project Number
PLAN FILE NO.
DRAWING NO.
S2
SHEET 115 OF SHEETS 211

PLOTTED:4/30/2019 5:27:10 PM

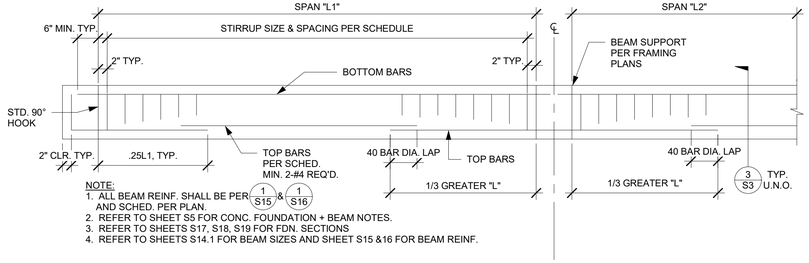

S3-1 TYPICAL CONC. BEAM DIAGRAM-MULTI SPAN
1 3/4" = 1'-0"

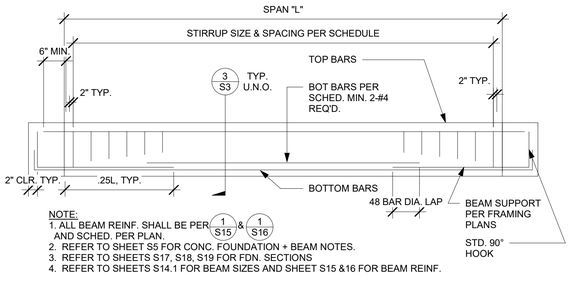

S3-2 TYPICAL CONC. BEAM DIAGRAM-SINGLE SPAN
2 3/4" = 1'-0"

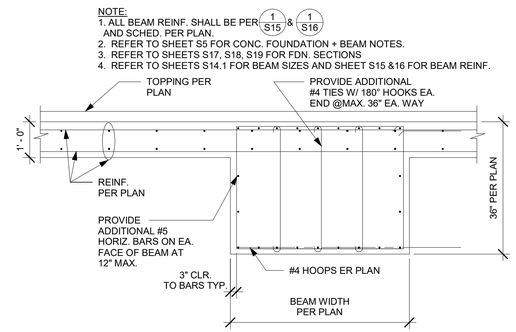

S3-3 TYPICAL FOUNDATION SECTION
3 1/2" = 1'-0"

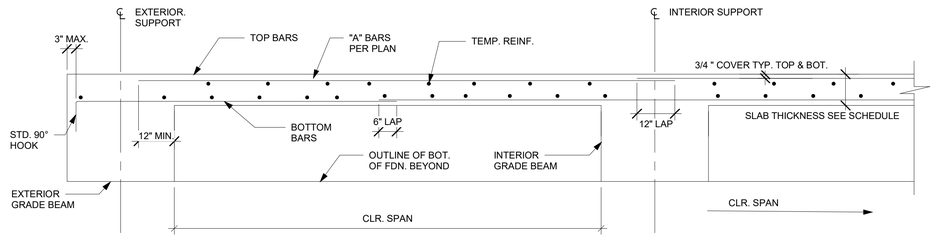

S3-4 ONE WAY FDN. SLAB REINF. DIAGRAM
4 1/2" = 1'-0"

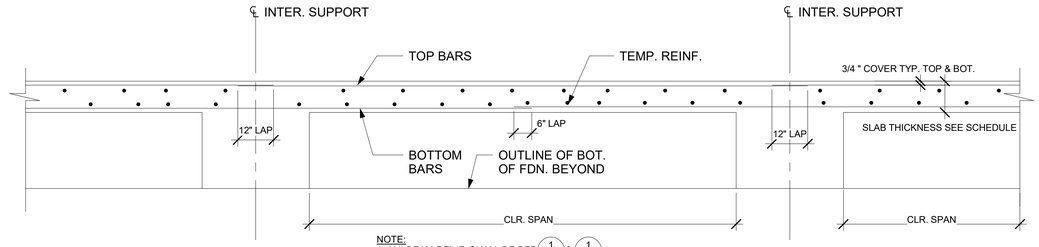

S3-5 ONE WAY FDN. SLAB REINF. DIAGRAM 2
5 1/2" = 1'-0"

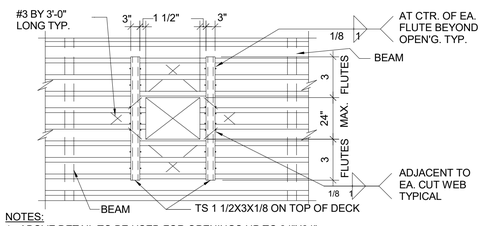

NOTES:
1. ABOVE DETAIL TO BE USED FOR OPENINGS UP TO 24"X24".
2. DO NOT CUT STEEL DECK UNTIL CONCRETE FILL HAS CURED.
3. BLOCK OUT OPENINGS IN CONCRETE FILL.

GENERAL NOTES:
1. ALL DETAILS SHOWN TO BE PROVIDED BY STEEL DECK CONTRACTOR.
2. WHEN OPENING EXCEEDS 24" IN EITHER DIRECTION PROVIDE C4X5.4 HEADERS AROUND OPENING. HEADERS SHALL BE SUPPORTED FROM THE BEAMS. HEADERS TO SUPPORTING BEAMS TO BE PROVIDED BY STRUCT. STEEL CONTRACTOR.

S3-6 METAL DECK OPENING DETAIL
6 1" = 1'-0"

GAGE SELECTION TABLE									
CONC. SLAB DEPTH	OVERHANG								
	2"	3"	4"	5"	6"	7"	8"	9"	10"
4"	20	18	16	14	12	12	12	10	10
4 1/2"	20	18	16	14	12	12	12	10	10
5"	18	18	16	14	12	12	12	10	10
5 1/2"	18	16	16	14	12	12	10	10	10
6"	18	16	14	14	12	12	10	10	-
6 1/2"	18	16	14	12	12	12	10	10	-
7"	16	16	14	12	12	12	10	10	-
7 1/2"	16	14	14	12	12	10	10	-	-
NO CONC.	14	14	12	10	3/16"	1/4"	1/4"	5/16"	3/8"

S3-7 EDGE FORM DETS. & SCHED.
7 1" = 1'-0"

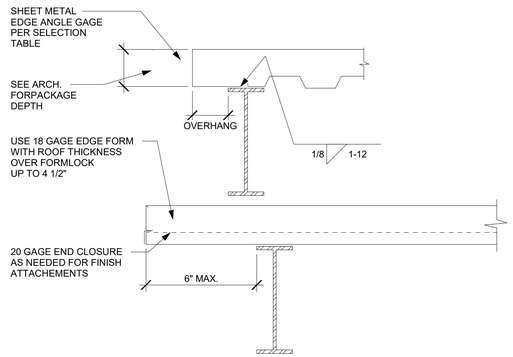

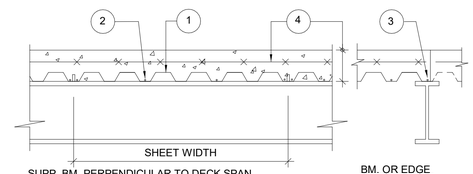

NOTES:
1. REFER TO STEEL DECK SCHEDULE FOR ◯ REFERENCES.
2. STEEL DECK SHALL BE G60 GALVANIZED. ASTM A446 GRADE A. USE E60XX (MIN.) WELDING RODS.
3. STEEL DECK SHALL BE PER SCHEDULE, EPIC METAL CORPORATION OR EQUIVALENT.
4. DECK SHALL BE CONTINUOUS OVER MINIMUM THREE SPANS, U.N.O.
5. PUDDLE WELDS SHALL BE MIN. 1/2" DIAM. OR AS PER MFG. SPECS.
6. WELD PATTERN INDICATED SHALL BE PROVIDED AT EACH SUPPORT.
7. CONNECT SIDE LAP BY BUTTON-PUNCHING AT 24" MAX. ON CTRS.
8. ELECTRICAL CONDUITS SHALL NOT EXCEED 1" NET DIAMETER, & SHALL BE PLACED AT SLAB MID-DEPTH.

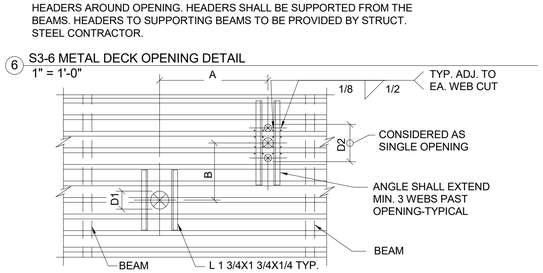

NOTES:
1. ABOVE DETAIL APPLIES TO HOLES CUTTING NO MORE THAN:- 3 ADJACENT WEBS FOR 6" AND 8" MODULE DECK. 2 ADJACENT WEBS FOR 12" MODULE DECK.
2. ANGLES SHALL BE PLACED ON TOP OF DECK.
3. IF DIMENSION "A" OR DIMENSION "B" IS GREATER THAN 4XD1,4XD2,OR 32" WHICHEVER IS LARGER, THEN THERE IS NO RESTRICTION ON DIMENSION "B" OR "A" RESPECTIVELY.
4. IF DIMENSIONS "A" AND "B" ARE LESS THAN 4XD1, 4XD2, OR 32" WHICHEVER IS LARGER, THE OPENINGS SHALL BE CONSIDERED AS A SINGLE OPENING AND REINFORCED AS REQUIRED FOR LARGER OPENINGS.
5. HOLES LESS THAN 6" DIA. AND CUTTING NO MORE THAN ONE WEB DO NOT REQUIRE REINFORCING.
6. BLOCK OUT OPENINGS WITH CONCRETE FILL AND CUT STEEL DECK AFTER CONCRETE FILL HAS CURED.

NOTES: COORDINATE WITH ARCHITECT

S3-9 MINOR METAL DECK OPENING DETAIL
9 1" = 1'-0"

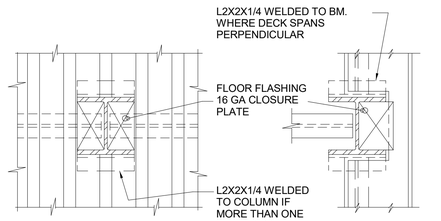

NOTES:
1. ALL DETAILS SHOWN ARE TYPICAL
2. ALL DETAILS SHOWN TO BE PROVIDED BY STEEL DECK CONTRACTOR

NOTES: COORDINATE WITH ARCHITECT

S3-10 METAL DECK SUPPORT AT COLUMN
10 1" = 1'-0"

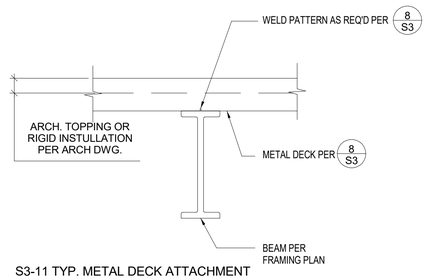

S3-11 TYP. METAL DECK ATTACHMENT DET.
11 1" = 1'-0"

STEEL DECK SCHEDULE			
DETAIL	8/S3	8B/S3	8A/S3
1 STEEL DECK:	GYM. TORIS 4A	M.P. OR TORIS 4A	M.P. 2" W2 FORMLOCK
DEPTH: INS.			
GAUGE	16	16	16
I : IN /FT. ⁴	4.10	4.10	0.707
S (+VE): IN /FT. ³	1.63	1.63	0.623
S (-VE): IN /FT. ³	1.56	1.56	0.638
SHEET WIDTH: INS.	32	32	36
WELDING PATTERNS:			
2 PERPENDICULAR: PER SHT.	5	4	4
3 PARALLEL: O/C INS.	12	12	12
4 CONCRETE FILL:	NONE	NONE	NONE
STRENGTH: P.S.I.	-	-	-
DENSITY: P.C.F.	-	-	-
DEPTH: INS.	-	-	-
REINF.	-	-	-
5 STUD CONNECTORS:	NONE	NONE	NONE
DIAMETER: INS.	-	-	-
LENGTH: INS.	-	-	-

ALL THE MATERIAL AND WORK SHALL COMPLY WITH ICC ESR - IAPMO #226 & #217

S3-8 METAL DECK DETAIL
8 1" = 1'-0"

BUREAU OF ENGINEERING
OFFICIAL RECORD

THE CITY OF LOS ANGELES OR ITS OFFICERS OR AGENTS SHALL NOT BE RESPONSIBLE FOR THE ACCURACY OR COMPLETENESS OF ELECTRONIC COPIES OF THIS PLAN SHEET.

TTLB TEMPLATE REVISION DATE: 02/2013
SHEET ISSUE DATE: 26 APR 19
FILE PATH: BIM 360://Studio City Recreation Center/SCRC-Structural.rvt

REVISION DATES (DESIGN STAGE ONLY)

DEPARTMENT OF PUBLIC WORKS
CITY OF LOS ANGELES
BUREAU OF ENGINEERING
ENGINEERING
CITY OF LOS ANGELES

NO.	REVISION DESCRIPTION	DATE	BY

BUILDING NO. -
INDEX NO. RP-300106

REGISTERED PROFESSIONAL ENGINEER NASTARIN HOSMAN NO. C-62199 EXP. 09-30-19 CIVIL STATE OF CALIFORNIA

CITY ENGINEER	
DATE:	29 APR. 19
	29 APR. 19
	29 APR. 19

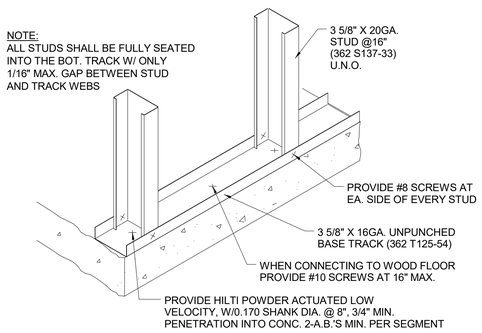

1 S4-1 BOTTOM TRACK ANCHORAGE
1" = 1'-0"

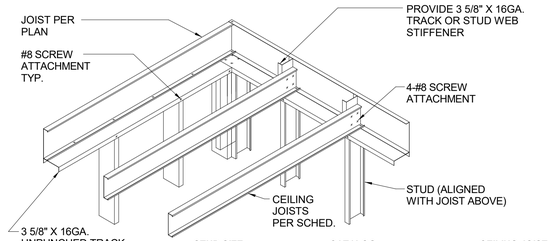

STUD SIZE	CATALOG DESIGNATION	CEILING JOIST MAX. SPAN
2-1/2"X20GA.	250S125-33	5'-6"
3-1/2"X20GA.	350S125-33	7'-6"
6"X20GA.	600S125-33	8'-6"
6"X20GA.	600S137-33	10'-6"
6"X18GA.	600S162-43	12'-6"

2 S4-2 TYPICAL CEILING FRAMING
1" = 1'-0"

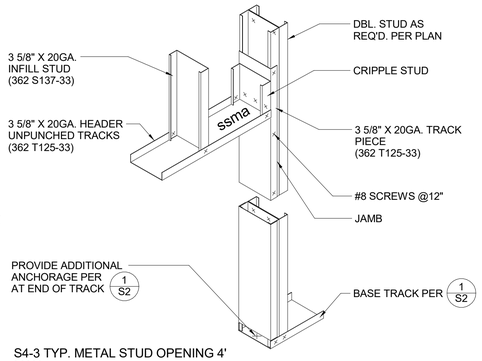

3 S4-3 TYP. METAL STUD OPENING 4' MAX.
1" = 1'-0"

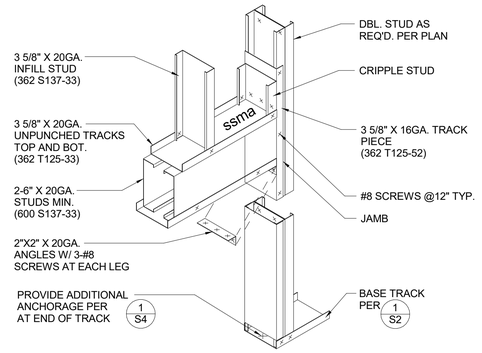

4 S4-4 TYP. METAL STUD OPENING 8' MAX
1" = 1'-0"

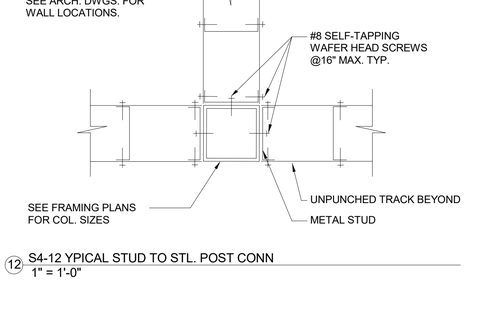

5 S4-5 WALL FRAMING AT CORNER TRACK LAP CONN
1" = 1'-0"

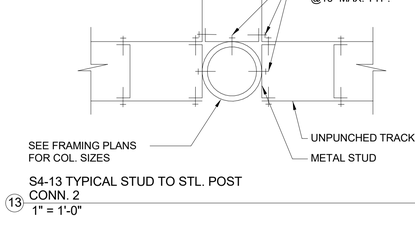

6 S4-6 BACKING FLAT STRAP
1" = 1'-0"

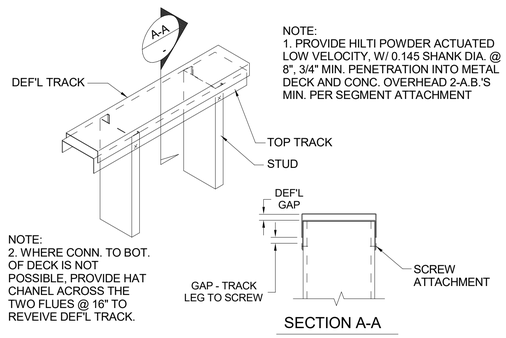

7 S4-7 NON-LOAD BEARING PART. CONN
1" = 1'-0"

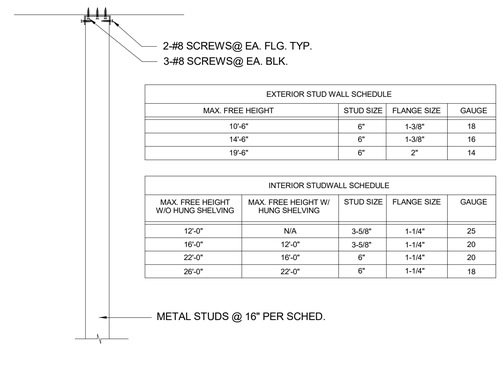

EXTERIOR STUD WALL SCHEDULE			
MAX. FREE HEIGHT	STUD SIZE	FLANGE SIZE	GAUGE
10'-6"	6"	1-3/8"	18
14'-6"	6"	1-3/8"	16
19'-6"	6"	2"	14

INTERIOR STUDWALL SCHEDULE				
MAX. FREE HEIGHT W/O HUNG SHELVING	MAX. FREE HEIGHT W/ HUNG SHELVING	STUD SIZE	FLANGE SIZE	GAUGE
12'-0"	N/A	3-5/8"	1-1/4"	25
16'-0"	12'-0"	3-5/8"	1-1/4"	20
22'-0"	16'-0"	6"	1-1/4"	20
26'-0"	22'-0"	6"	1-1/4"	18

8 S4-8 SECTION AT NEW WALL
1" = 1'-0"

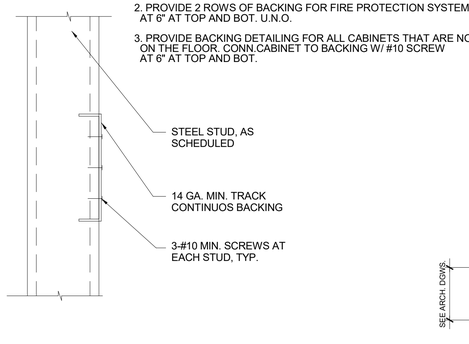

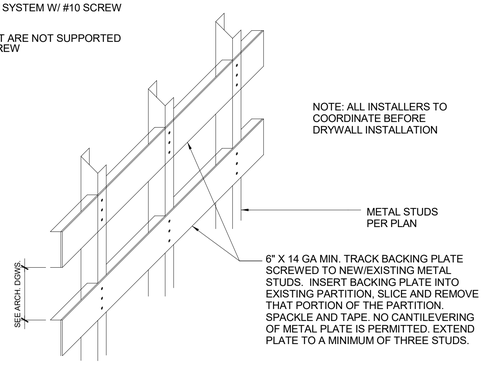

9 S4-9 SECTION AT BACKING PLATE
1" = 1'-0"

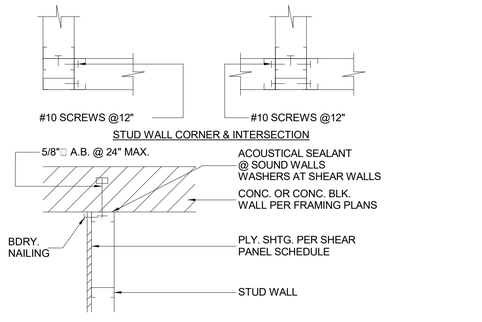

10 S4-10 WALL FRAMING AT CORNER
1" = 1'-0"

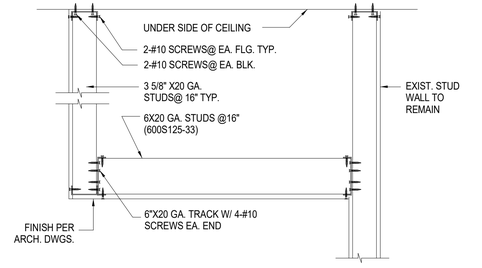

11 S4-11 SECTION AT NEW WALL
1" = 1'-0"

12 S4-12 YPICAL STUD TO STL. POST CONN
1" = 1'-0"

13 S4-13 TYPICAL STUD TO STL. POST CONN. 2
1" = 1'-0"

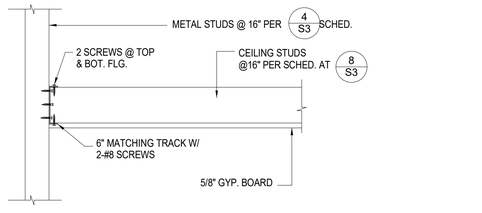

14 S4-14 SECTION AT NEW WALL
1" = 1'-0"

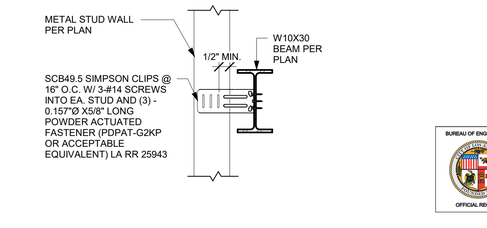

15 S4-15 STUD WALL BALOON FRAMED CONN.
1" = 1'-0"

BUREAU OF ENGINEERING
OFFICIAL RECORD

DEPARTMENT OF PUBLIC WORKS
BUREAU OF ENGINEERING
CITY OF LOS ANGELES
ENGINEERING

NO.	REVISION DESCRIPTION	DATE	BY

BUILDING NO. -
INDEX NO. RP-300106

REGISTERED PROFESSIONAL ENGINEER
TED A. ALLEN
NO. C-62199
Exp. 09-30-19
CIVIL
STATE OF CALIFORNIA

TED ALLEN, PE
ARCHITECTURAL DIVISION
ENGINEER: NAST ENTERPRISES CORP. LIC. NO.: C-62199
DESIGNED BY: H.N.
DRAWN BY: H.N.
CHECKED BY: H.N.
APPROVED BY: MAHMOOD KARIMZADEH, AIA, DEPUTY CITY ENGINEER
CITY ENGINEER DATE: 29 APR. 19
29 APR. 19
29 APR. 19
29 APR. 19
29 APR. 19

VERTICAL CONTROL:
HORIZONTAL CONTROL:
SHEET TITLE: TYPICAL DETAILS
PROJECT: STUDIO CITY GYMNASIUM
ADDRESS: 12621 RYE STREET, STUDIO CITY, CA 91604

CITY OF LOS ANGELES
ST Enterprises Corp.
554 S. San Vicente Blvd., #202, Los Angeles, CA 90048 Tel: (310) 210 - 3238

WORK ORDER NO. Project Number
PLAN FILE NO.
DRAWING NO. S4
SHEET 117 OF SHEETS 211

PLOTTED:4/30/2019 5:27:15 PM

THE CITY OF LOS ANGELES OR ITS OFFICERS OR AGENTS SHALL NOT BE RESPONSIBLE FOR THE ACCURACY OR COMPLETENESS OF ELECTRONIC COPIES OF THIS PLAN SHEET.

TTLB TEMPLATE REVISION DATE: 02/2013
SHEET ISSUE DATE: 26 APR. 19
FILE PATH: BIM 360://Studio City Recreation Center/SCRC-Structural.rvt

REVISION DATES (DESIGN STAGE ONLY)

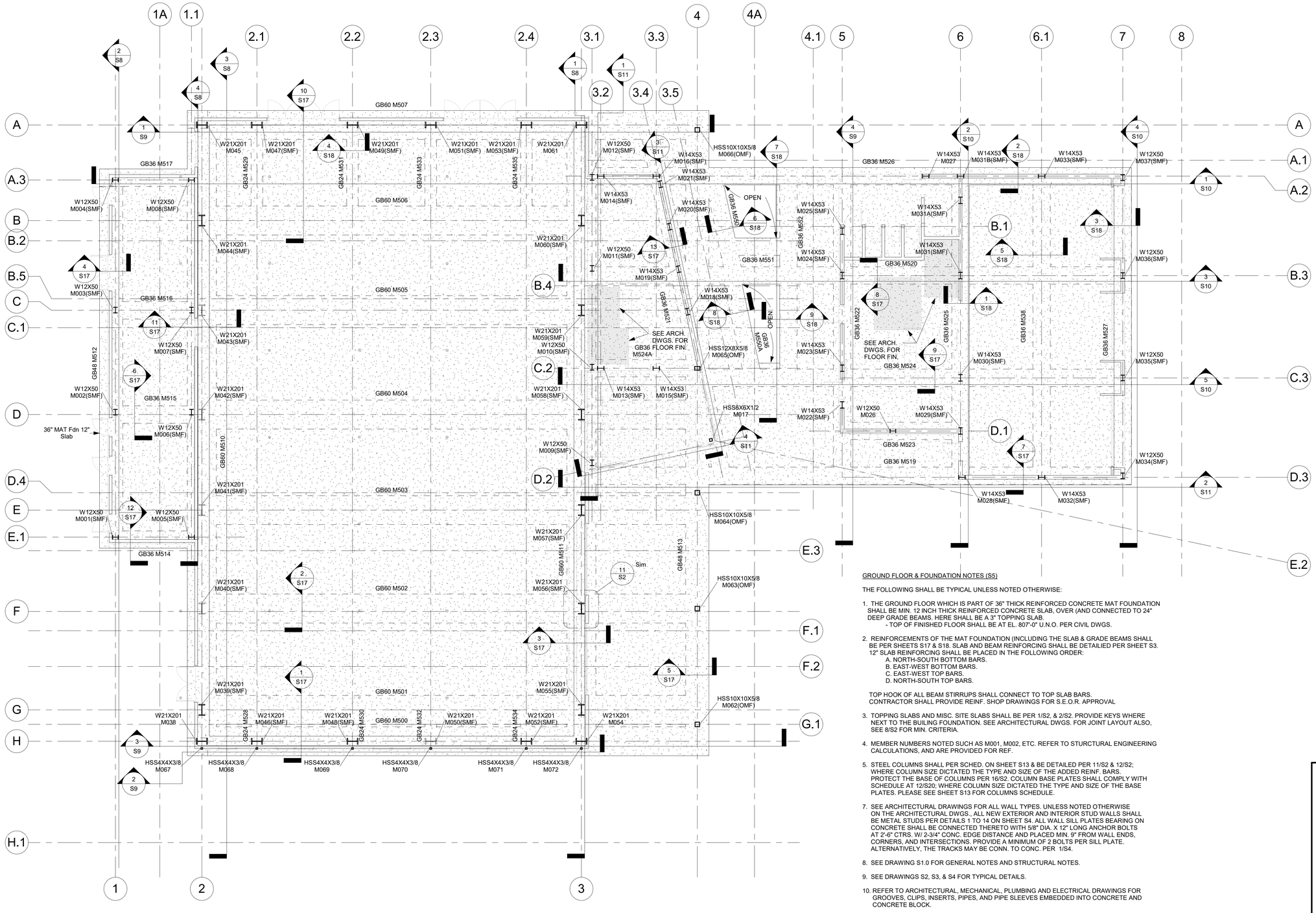

GROUND FLOOR & FOUNDATION NOTES (S5)

THE FOLLOWING SHALL BE TYPICAL UNLESS NOTED OTHERWISE:

1. THE GROUND FLOOR WHICH IS PART OF 36" THICK REINFORCED CONCRETE MAT FOUNDATION SHALL BE MIN. 12 INCH THICK REINFORCED CONCRETE SLAB, OVER (AND CONNECTED TO 24" DEEP GRADE BEAMS. HERE SHALL BE A 3" TOPPING SLAB.
   - TOP OF FINISHED FLOOR SHALL BE AT EL. 807'-0" U.N.O. PER CIVIL DWGS.
2. REINFORCEMENTS OF THE MAT FOUNDATION (INCLUDING THE SLAB & GRADE BEAMS SHALL BE PER SHEETS S17 & S18. SLAB AND BEAM REINFORCING SHALL BE DETAILIED PER SHEET S3. 12" SLAB REINFORCING SHALL BE PLACED IN THE FOLLOWING ORDER:
   A. NORTH-SOUTH BOTTOM BARS.
   B. EAST-WEST BOTTOM BARS.
   C. EAST-WEST TOP BARS.
   D. NORTH-SOUTH TOP BARS.

   TOP HOOK OF ALL BEAM STIRRUPS SHALL CONNECT TO TOP SLAB BARS. CONTRACTOR SHALL PROVIDE REINF. SHOP DRAWINGS FOR S.E.O.R. APPROVAL
3. TOPPING SLABS AND MISC. SITE SLABS SHALL BE PER 1/S2, & 2/S2. PROVIDE KEYS WHERE NEXT TO THE BUILING FOUNDATION. SEE ARCHITECTURAL DWGS. FOR JOINT LAYOUT ALSO, SEE 8/S2 FOR MIN. CRITERIA.
4. MEMBER NUMBERS NOTED SUCH AS M001, M002, ETC. REFER TO STURCTURAL ENGINEERING CALCULATIONS, AND ARE PROVIDED FOR REF.
5. STEEL COLUMNS SHALL PER SCHED. ON SHEET S13 & BE DETAILED PER 11/S2 & 12/S2; WHERE COLUMN SIZE DICTATED THE TYPE AND SIZE OF THE ADDED REINF. BARS. PROTECT THE BASE OF COLUMNS PER 16/S2. COLUMN BASE PLATES SHALL COMPLY WITH SCHEDULE AT 12/S20; WHERE COLUMN SIZE DICTATED THE TYPE AND SIZE OF THE BASE PLATES. PLEASE SEE SHEET S13 FOR COLUMNS SCHEDULE.
7. SEE ARCHITECTURAL DRAWINGS FOR ALL WALL TYPES. UNLESS NOTED OTHERWISE ON THE ARCHITECTURAL DWGS., ALL NEW EXTERIOR AND INTERIOR STUD WALLS SHALL BE METAL STUDS PER DETAILS 1 TO 14 ON SHEET S4. ALL WALL SILL PLATES BEARING ON CONCRETE SHALL BE CONNECTED THERETO WITH 5/8" DIA. X 12" LONG ANCHOR BOLTS AT 2'-6" CTRS. W/ 2-3/4" CONC. EDGE DISTANCE AND PLACED MIN. 9" FROM WALL ENDS, CORNERS, AND INTERSECTIONS. PROVIDE A MINIMUM OF 2 BOLTS PER SILL PLATE. ALTERNATIVELY, THE TRACKS MAY BE CONN. TO CONC. PER 1/S4.
8. SEE DRAWING S1.0 FOR GENERAL NOTES AND STRUCTURAL NOTES.
9. SEE DRAWINGS S2, S3, & S4 FOR TYPICAL DETAILS.
10. REFER TO ARCHITECTURAL, MECHANICAL, PLUMBING AND ELECTRICAL DRAWINGS FOR GROOVES, CLIPS, INSERTS, PIPES, AND PIPE SLEEVES EMBEDDED INTO CONCRETE AND CONCRETE BLOCK.

1 S5 - FOUNDATION AND GROUND FLOOR FRAMING PLAN
1/8" = 1'-0"

2 S5 GROUND FLOOR & FDN. NOTES
1" = 1'-0"

THE CITY OF LOS ANGELES OR ITS OFFICERS OR AGENTS SHALL NOT BE RESPONSIBLE FOR THE ACCURACY OR COMPLETENESS OF ELECTRONIC COPIES OF THIS PLAN SHEET.

TTLB TEMPLATE REVISION DATE: 02/2013
SHEET ISSUE DATE: 26 APR 19
FILE PATH: BIM 360://Studio City Recreation Center/SCRC-Structural.rvt

REVISION DATES (DESIGN STAGE ONLY)

BUREAU OF ENGINEERING
CITY OF LOS ANGELES
ENGINEERING

NO.	REVISION DESCRIPTION	DATE	BY

BUILDING NO. -
INDEX NO. RP-300106

REGISTERED PROFESSIONAL ENGINEER
HOWARD T. NAST
NO. C-62199
EXP. 09-30-19
CIVIL
STATE OF CALIFORNIA

DEPARTMENT OF PUBLIC WORKS
CITY OF LOS ANGELES

TED ALLEN, PE
ARCHITECTURAL DIVISION

ENGINEER:	NAST ENTERPRISES CORP.	LIC. NO.: C-62199
DESIGNED BY:	H.N.	DATE: 29 APR 19
DRAWN BY:	H.N.	DATE: 29 APR 19
CHECKED BY:	H.N.	DATE: 29 APR 19
APPROVED BY:	MAHMOOD KARIMZADEH, AIA, DEPUTY CITY ENGINEER	DATE: 29 APR 19

CITY OF LOS ANGELES
VERTICAL CONTROL:
HORIZONTAL CONTROL:

SHEET TITLE: FOUNDATION AND GROUND FLOOR FRAMING PLAN
PROJECT: STUDIO CITY GYMNASIUM
ADDRESS: 12621 RYE STREET, STUDIO CITY, CA 91604

ST Enterprises Corp.
554 S. San Vicente Blvd., #202, Los Angeles, CA 90048
Tel: (310) 210 - 3238

BUREAU OF ENGINEERING
OFFICIAL RECORD

WORK ORDER NO.
Project Number
PLAN FILE NO.
DRAWING NO.
S5
SHEET 118 OF SHEETS 211

PLOTTED:4/30/2019 5:27:17 PM

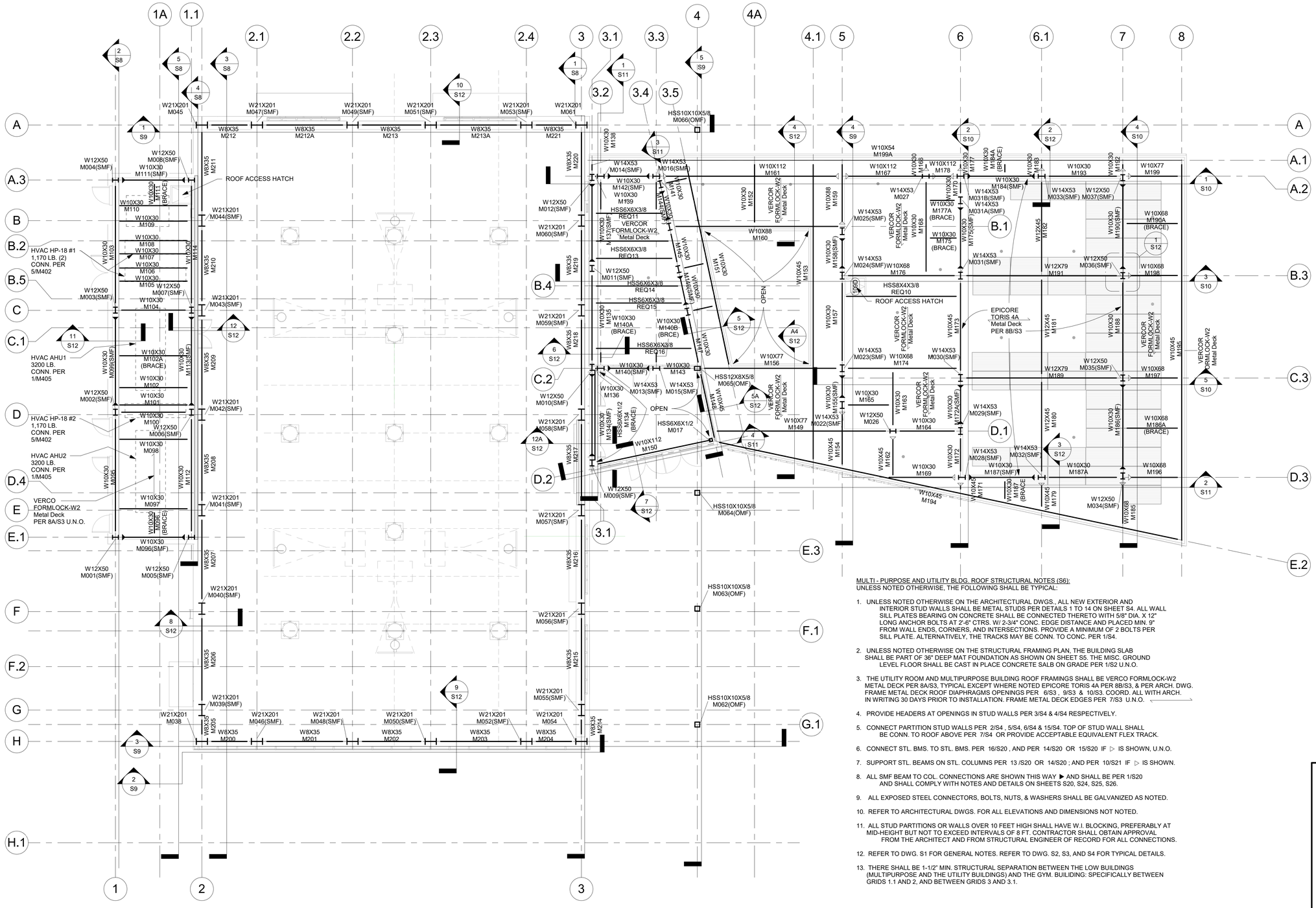

MULTI - PURPOSE AND UTILITY BLDG. ROOF STRUCTURAL NOTES (S6):
UNLESS NOTED OTHERWISE, THE FOLLOWING SHALL BE TYPICAL:

1. UNLESS NOTED OTHERWISE ON THE ARCHITECTURAL DWGS., ALL NEW EXTERIOR AND INTERIOR STUD WALLS SHALL BE METAL STUDS PER DETAILS 1 TO 14 ON SHEET S4. ALL WALL SILL PLATES BEARING ON CONCRETE SHALL BE CONNECTED THERETO WITH 5/8" DIA. X 12" LONG ANCHOR BOLTS AT 2'-6" CTRS. W/ 2-3/4" CONC. EDGE DISTANCE AND PLACED MIN. 9" FROM WALL ENDS, CORNERS, AND INTERSECTIONS. PROVIDE A MINIMUM OF 2 BOLTS PER SILL PLATE. ALTERNATIVELY, THE TRACKS MAY BE CONN. TO CONC. PER 1/S4.
2. UNLESS NOTED OTHERWISE ON THE STRUCTURAL FRAMING PLAN, THE BUILDING SLAB SHALL BE PART OF 36" DEEP MAT FOUNDATION AS SHOWN ON SHEET S5. THE MISC. GROUND LEVEL FLOOR SHALL BE CAST IN PLACE CONCRETE SALB ON GRADE PER 1/S2 U.N.O.
3. THE UTILITY ROOM AND MULTIPURPOSE BUILDING ROOF FRAMINGS SHALL BE VERCO FORMLOCK-W2 METAL DECK PER 8A/S3, TYPICAL EXCEPT WHERE NOTED EPICORE TORIS 4A PER 8B/S3, & PER ARCH. DWG. FRAME METAL DECK ROOF DIAPHRAGMS OPENINGS PER 6/S3 , 9/S3 & 10/S3. COORD. ALL WITH ARCH. IN WRITING 30 DAYS PRIOR TO INSTALLATION. FRAME METAL DECK EDGES PER 7/S3 U.N.O.
4. PROVIDE HEADERS AT OPENINGS IN STUD WALLS PER 3/S4 & 4/S4 RESPECTIVELY.
5. CONNECT PARTITION STUD WALLS PER 2/S4 , 5/S4, 6/S4 & 15/S4. TOP OF STUD WALL SHALL BE CONN. TO ROOF ABOVE PER 7/S4 OR PROVIDE ACCEPTABLE EQUIVALENT FLEX TRACK.
6. CONNECT STL. BMS. TO STL. BMS. PER 16/S20 , AND PER 14/S20 OR 15/S20 IF ▷ IS SHOWN, U.N.O.
7. SUPPORT STL. BEAMS ON STL. COLUMNS PER 13 /S20 OR 14/S20 ; AND PER 10/S21 IF ▷ IS SHOWN.
8. ALL SMF BEAM TO COL. CONNECTIONS ARE SHOWN THIS WAY ▶ AND SHALL BE PER 1/S20 AND SHALL COMPLY WITH NOTES AND DETAILS ON SHEETS S20, S24, S25, S26.
9. ALL EXPOSED STEEL CONNECTORS, BOLTS, NUTS, & WASHERS SHALL BE GALVANIZED AS NOTED.
10. REFER TO ARCHITECTURAL DWGS. FOR ALL ELEVATIONS AND DIMENSIONS NOT NOTED.
11. ALL STUD PARTITIONS OR WALLS OVER 10 FEET HIGH SHALL HAVE W.I. BLOCKING, PREFERABLY AT MID-HEIGHT BUT NOT TO EXCEED INTERVALS OF 8 FT. CONTRACTOR SHALL OBTAIN APPROVAL FROM THE ARCHITECT AND FROM STRUCTURAL ENGINEER OF RECORD FOR ALL CONNECTIONS.
12. REFER TO DWG. S1 FOR GENERAL NOTES. REFER TO DWG. S2, S3, AND S4 FOR TYPICAL DETAILS.
13. THERE SHALL BE 1-1/2" MIN. STRUCTURAL SEPARATION BETWEEN THE LOW BUILDINGS (MULTIPURPOSE AND THE UTILITY BUILDINGS) AND THE GYM. BUILIDING: SPECIFICALLY BETWEEN GRIDS 1.1 AND 2, AND BETWEEN GRIDS 3 AND 3.1.

1 S6 - MULTI - PURPOSE AND UTILITY BLDG. ROOF FRAMING PLAN
1/8" = 1'-0"

2 S6 MULTI - PURPOSE AND UTILITY BLDG. ROOF NOTES
1" = 1'-0"

THE CITY OF LOS ANGELES OR ITS OFFICERS OR AGENTS SHALL NOT BE RESPONSIBLE FOR THE ACCURACY OR COMPLETENESS OF ELECTRONIC COPIES OF THIS PLAN SHEET.

TTLB TEMPLATE REVISION DATE: 02/2013
SHEET ISSUE DATE: 26 APR. 19
FILE PATH: BIM 360://Studio City Recreation Center/SCRC-Structural.rvt

REVISION DATES (DESIGN STAGE ONLY)

ENGINEERING
CITY OF LOS ANGELES
BUREAU OF ENGINEERING
DEPARTMENT OF PUBLIC WORKS

NO.	REVISION DESCRIPTION	DATE	BY

BUILDING NO. -
INDEX NO. RP-300106

REGISTERED PROFESSIONAL ENGINEER
MATTHEW HOWARD
NO. C-62199
EXP. 09-30-19
CIVIL
STATE OF CALIFORNIA

TED ALLEN, PE
ARCHITECTURAL DIVISION
ENGINEER: NAST ENTERPRISES CORP. LIC. NO.: C-62199
DESIGNED BY: H.N.
DRAWN BY: H.N.
CHECKED BY: H.N.
APPROVED BY: MAHMOOD KARIMZADEH, AIA, DEPUTY CITY ENGINEER

CITY ENGINEER	DATE:
	29 APR. 19
	29 APR. 19
	29 APR. 19
	29 APR. 19
	29 APR. 19

CITY OF LOS ANGELES
ST Enterprises Corp.
554 S San Vicente Blvd., #202, Los Angeles, CA 90048 Tel: (310) 210 - 3238

VERTICAL CONTROL:
HORIZONTAL CONTROL:

SHEET TITLE: MULTI - PURPOSE AND UTILITY BLDG. ROOF FRAMING PLAN
PROJECT: STUDIO CITY GYMNASIUM
ADDRESS: 12621 RYE STREET, STUDIO CITY, CA 91604

BUREAU OF ENGINEERING
OFFICIAL RECORD

WORK ORDER NO. Project Number
PLAN FILE NO.
DRAWING NO. S6
SHEET 119 OF SHEETS 211

PLOTTED:4/30/2019 5:27:24 PM

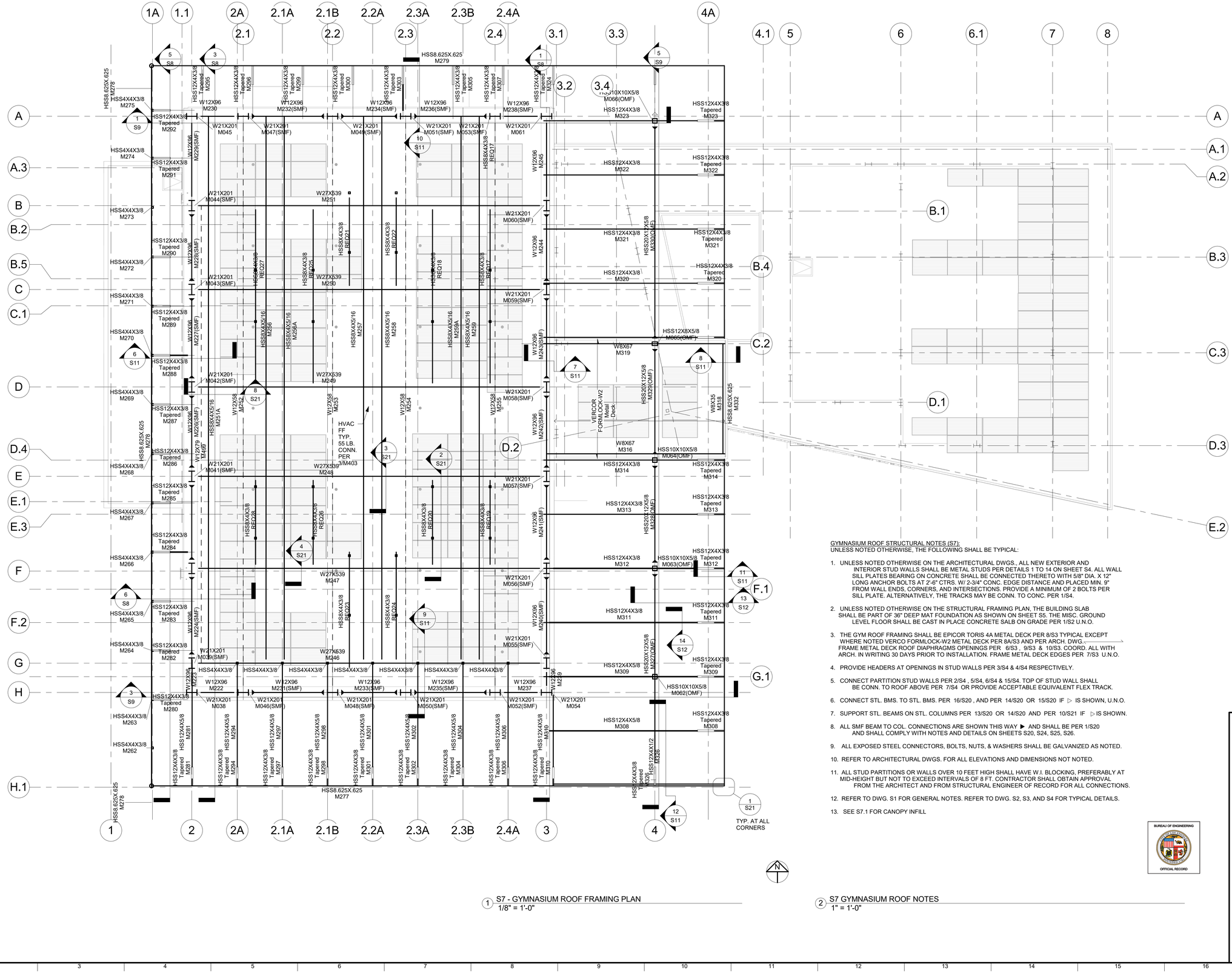

1 S7 - GYMNASIUM ROOF FRAMING PLAN
1/8" = 1'-0"

GYMNASIUM ROOF STRUCTURAL NOTES (S7):
UNLESS NOTED OTHERWISE, THE FOLLOWING SHALL BE TYPICAL:

1. UNLESS NOTED OTHERWISE ON THE ARCHITECTURAL DWGS., ALL NEW EXTERIOR AND INTERIOR STUD WALLS SHALL BE METAL STUDS PER DETAILS 1 TO 14 ON SHEET S4. ALL WALL SILL PLATES BEARING ON CONCRETE SHALL BE CONNECTED THERETO WITH 5/8" DIA. X 12" LONG ANCHOR BOLTS AT 2'-6" CTRS. W/ 2-3/4" CONC. EDGE DISTANCE AND PLACED MIN. 9" FROM WALL ENDS, CORNERS, AND INTERSECTIONS. PROVIDE A MINIMUM OF 2 BOLTS PER SILL PLATE. ALTERNATIVELY, THE TRACKS MAY BE CONN. TO CONC. PER 1/S4.
2. UNLESS NOTED OTHERWISE ON THE STRUCTURAL FRAMING PLAN, THE BUILDING SLAB SHALL BE PART OF 36" DEEP MAT FOUNDATION AS SHOWN ON SHEET S5. THE MISC. GROUND LEVEL FLOOR SHALL BE CAST IN PLACE CONCRETE SALB ON GRADE PER 1/S2 U.N.O.
3. THE GYM ROOF FRAMING SHALL BE EPICOR TORIS 4A METAL DECK PER 8/S3 TYPICAL EXCEPT WHERE NOTED VERCO FORMLOCK-W2 METAL DECK PER 8A/S3 AND PER ARCH. DWG. FRAME METAL DECK ROOF DIAPHRAGMS OPENINGS PER 6/S3 , 9/S3 & 10/S3. COORD. ALL WITH ARCH. IN WRITING 30 DAYS PRIOR TO INSTALLATION. FRAME METAL DECK EDGES PER 7/S3 U.N.O.
4. PROVIDE HEADERS AT OPENINGS IN STUD WALLS PER 3/S4 & 4/S4 RESPECTIVELY.
5. CONNECT PARTITION STUD WALLS PER 2/S4 , 5/S4, 6/S4 & 15/S4. TOP OF STUD WALL SHALL BE CONN. TO ROOF ABOVE PER 7/S4 OR PROVIDE ACCEPTABLE EQUIVALENT FLEX TRACK.
6. CONNECT STL. BMS. TO STL. BMS. PER 16/S20 , AND PER 14/S20 OR 15/S20 IF ▷ IS SHOWN, U.N.O.
7. SUPPORT STL. BEAMS ON STL. COLUMNS PER 13/S20 OR 14/S20 AND PER 10/S21 IF ▷ IS SHOWN.
8. ALL SMF BEAM TO COL. CONNECTIONS ARE SHOWN THIS WAY ▶ AND SHALL BE PER 1/S20 AND SHALL COMPLY WITH NOTES AND DETAILS ON SHEETS S20, S24, S25, S26.
9. ALL EXPOSED STEEL CONNECTORS, BOLTS, NUTS, & WASHERS SHALL BE GALVANIZED AS NOTED.
10. REFER TO ARCHITECTURAL DWGS. FOR ALL ELEVATIONS AND DIMENSIONS NOT NOTED.
11. ALL STUD PARTITIONS OR WALLS OVER 10 FEET HIGH SHALL HAVE W.I. BLOCKING, PREFERABLY AT MID-HEIGHT BUT NOT TO EXCEED INTERVALS OF 8 FT. CONTRACTOR SHALL OBTAIN APPROVAL FROM THE ARCHITECT AND FROM STRUCTURAL ENGINEER OF RECORD FOR ALL CONNECTIONS.
12. REFER TO DWG. S1 FOR GENERAL NOTES. REFER TO DWG. S2, S3, AND S4 FOR TYPICAL DETAILS.
13. SEE S7.1 FOR CANOPY INFILL

2 S7 GYMNASIUM ROOF NOTES
1" = 1'-0"

BUREAU OF ENGINEERING
OFFICIAL RECORD

THE CITY OF LOS ANGELES OR ITS OFFICERS OR AGENTS SHALL NOT BE RESPONSIBLE FOR THE ACCURACY OR COMPLETENESS OF ELECTRONIC COPIES OF THIS PLAN SHEET.

TTLB TEMPLATE REVISION DATE: 02/2013
SHEET ISSUE DATE: 26.APR.19
FILE PATH: BIM 360://Studio City Recreation Center/SCRC-Structural.rvt

REVISION DATES (DESIGN STAGE ONLY)

DEPARTMENT OF PUBLIC WORKS
BUREAU OF ENGINEERING
CITY OF LOS ANGELES
ENGINEERING
CITY OF LOS ANGELES

NO.	REVISION DESCRIPTION	DATE	BY

BUILDING NO. -
INDEX NO. RP-300106

REGISTERED PROFESSIONAL ENGINEER
NO. C-62199
Exp. 09-30-19
CIVIL
STATE OF CALIFORNIA

TED ALLEN, PE
ARCHITECTURAL DIVISION
ENGINEER: NAST ENTERPRISES CORP. LIC. NO.: C-62199
DESIGNED BY: H.N.
DRAWN BY: H.N.
CHECKED BY: H.N.
APPROVED BY: MAHMOOD KARIMZADEH, AIA, DEPUTY CITY ENGINEER

CITY ENGINEER
DATE: 29.APR.19
NO. C-62199
29.APR.19
29.APR.19
29.APR.19
29.APR.19

VERTICAL CONTROL:
HORIZONTAL CONTROL:

SHEET TITLE: GYMNASIUM ROOF FRAMING PLAN
PROJECT: STUDIO CITY GYMNASIUM
ADDRESS: 12621 RYE STREET, STUDIO CITY, CA 91604

CITY OF LOS ANGELES
ST Enterprises Corp.
554 S San Vicente Blvd. #202, Los Angeles, CA 90048 Tel: (310) 210 - 3238

WORK ORDER NO.
Project Number
PLAN FILE NO.
DRAWING NO.
S7
SHEET 120 OF SHEETS 211

PLOTTED:4/30/2019 5:27:31 PM

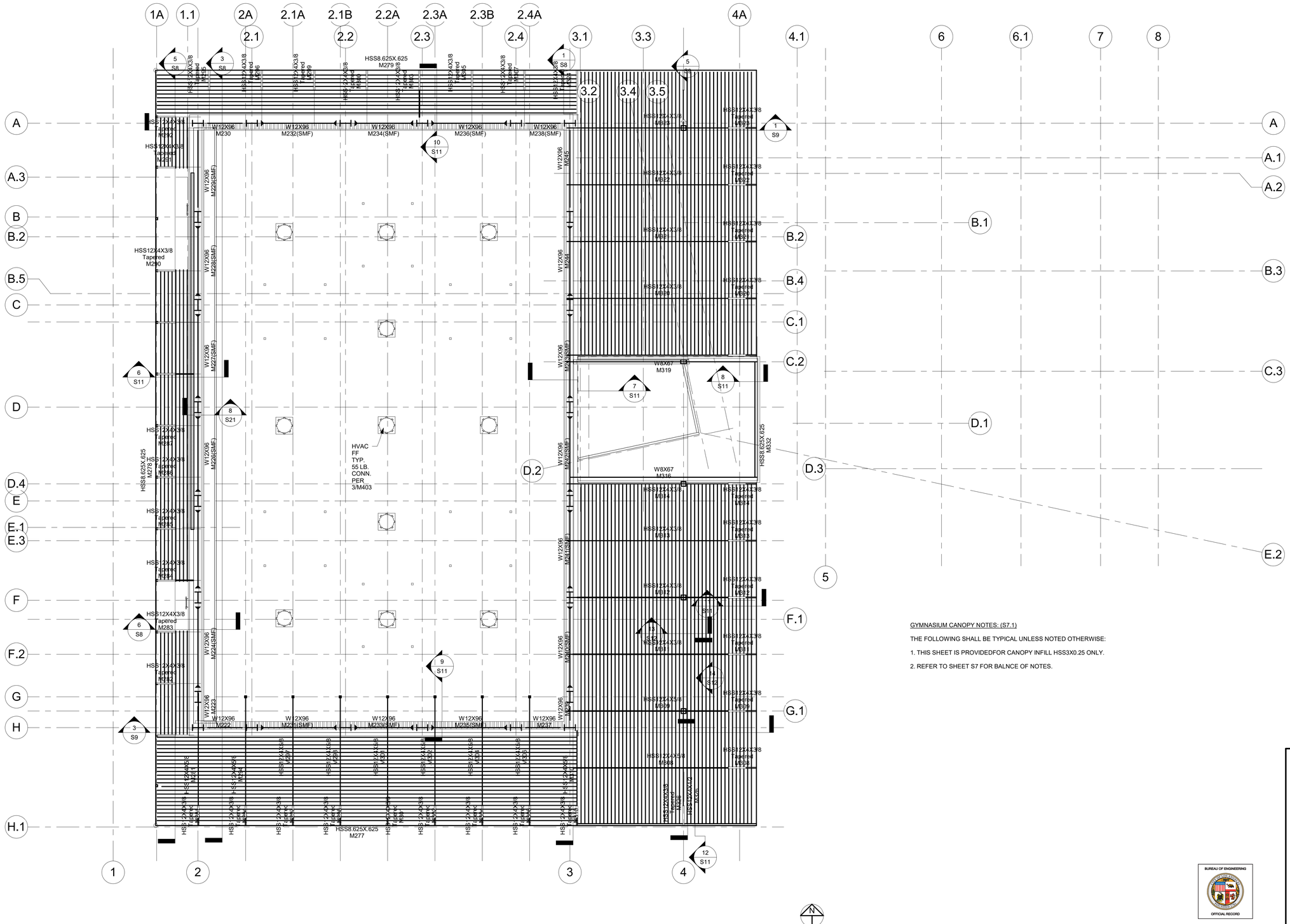
1A
1.1
2A
2.1
2.1A
2.1B
2.2
2.2A
2.3
2.3A
2.3B
2.4
2.4A
3.1
3.2
3.3
3.4
3.5
4A
4.1
6
6.1
7
8
A
A.1
A.2
A.3
B
B.1
B.2
B.3
B.4
B.5
C
C.1
C.2
C.3
D
D.1
D.2
D.3
D.4
E
E.1
E.2
E.3
F
F.1
F.2
G
G.1
H
H.1
1
2
3
4
5
HSS8.625X.625 M279
HSS12X4X3/8 Tapered M230
W12X96 M230
W12X96 M32(SMF)
W12X96 M234(SMF)
W12X96 M236(SMF)
W12X96 M238(SMF)
HSS12X4X3/8 Tapered M231
HSS12X4X3/8 Tapered M232
HSS12X4X3/8 Tapered M233
HSS12X4X3/8 Tapered M235
HSS12X4X3/8 Tapered M237
HSS12X4X3/8 Tapered M240
HSS12X4X3/8 Tapered M241
HSS12X4X3/8 Tapered M242
HSS12X4X3/8 Tapered M243
HSS12X4X3/8 Tapered M244
HSS12X4X3/8 Tapered M245
HSS12X4X3/8 Tapered M246
HSS12X4X3/8 Tapered M247
HSS12X4X3/8 Tapered M248
HSS12X4X3/8 Tapered M249
HSS12X4X3/8 Tapered M250
HSS12X4X3/8 Tapered M251
HSS12X4X3/8 Tapered M252
HSS12X4X3/8 Tapered M253
HSS12X4X3/8 Tapered M254
HSS12X4X3/8 Tapered M255
HSS12X4X3/8 Tapered M256
HSS12X4X3/8 Tapered M257
HSS12X4X3/8 Tapered M258
HSS12X4X3/8 Tapered M259
HSS12X4X3/8 Tapered M260
HSS12X4X3/8 Tapered M261
HSS12X4X3/8 Tapered M262
HSS12X4X3/8 Tapered M263
HSS12X4X3/8 Tapered M264
HSS12X4X3/8 Tapered M265
HSS12X4X3/8 Tapered M266
HSS12X4X3/8 Tapered M267
HSS12X4X3/8 Tapered M268
HSS12X4X3/8 Tapered M269
HSS12X4X3/8 Tapered M270
HSS12X4X3/8 Tapered M271
HSS12X4X3/8 Tapered M272
HSS12X4X3/8 Tapered M273
HSS12X4X3/8 Tapered M274
HSS12X4X3/8 Tapered M275
HSS12X4X3/8 Tapered M276
HSS8.625X.625 M278
HSS12X4X3/8 Tapered M281
HSS12X4X3/8 Tapered M282
HSS12X4X3/8 Tapered M283
HSS12X4X3/8 Tapered M284
HSS12X4X3/8 Tapered M285
HSS12X4X3/8 Tapered M286
HSS12X4X3/8 Tapered M287
HSS12X4X3/8 Tapered M288
HSS12X4X3/8 Tapered M289
HSS12X4X3/8 Tapered M290
W12X96 M222
W12X96 M223(SMF)
W12X96 M224(SMF)
W12X96 M225(SMF)
W12X96 M226(SMF)
W12X96 M227(SMF)
W12X96 M228(SMF)
W12X96 M229(SMF)
W12X96 M240(SMF)
W12X96 M241(SMF)
W12X96 M242(SMF)
W12X96 M243(SMF)
W12X96 M244
W12X96 M245
W8X67 M316
W8X67 M319
HSS8.625X.625 M277
HSS8.625X.625 M280
HVAC FF TYP. 55 LB. CONN. PER 3/M403
HSS12X4X5/8 M281
HSS12X4X5/8 M282
HSS12X4X5/8 M283
HSS12X4X5/8 M284
HSS12X4X5/8 M285
HSS12X4X5/8 M286
HSS12X4X5/8 M287
HSS12X4X5/8 M288
HSS12X4X5/8 M289
HSS12X4X5/8 M290
HSS12X4X5/8 M291
HSS12X4X5/8 M292
HSS12X4X5/8 M293
HSS12X4X5/8 M294
HSS12X4X5/8 M295
HSS12X4X5/8 M296
HSS12X4X5/8 M297
HSS12X4X5/8 M298
HSS12X4X5/8 M299
HSS12X4X5/8 M300
HSS12X4X5/8

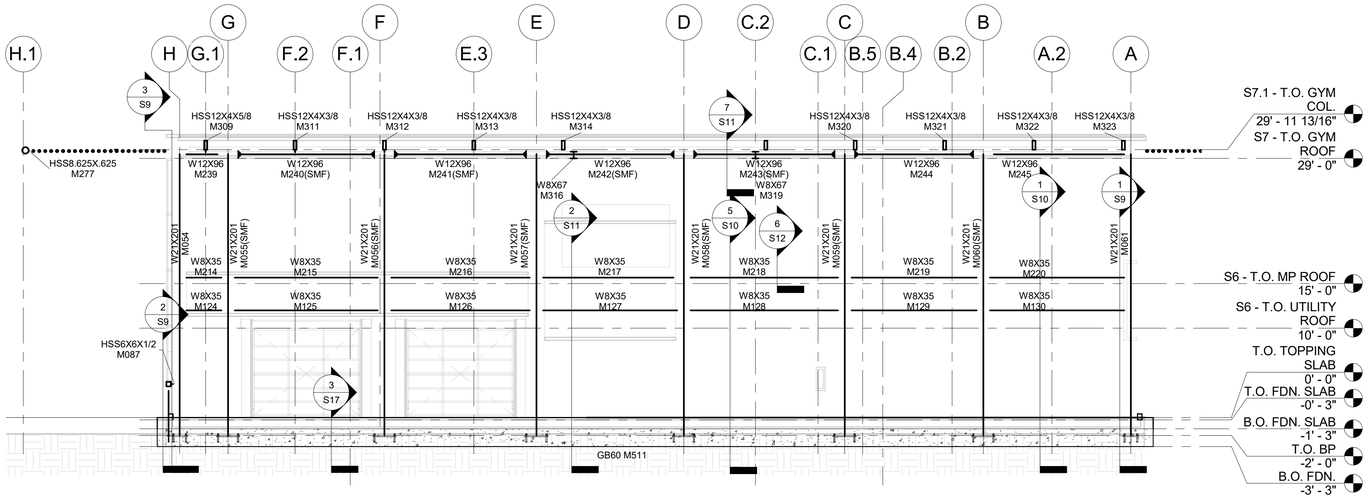

1 S8-1 FRAME ELEVATION ON GRID 3
1/8" = 1'-0"

SMF MOMENT FRAME ELEVATION NOTES: (S8)

1. ALL CONNECTIONS SHOWN THIS WAY "SMF ◀ " PERTAIN TO SPECIAL MOMENT FRAME & SHALL BE PER SHEET S20. ALL SMF BEAMS SHALL BE ORTHOGONAL TO COLS.
2. OTHER JOINTS SHOWN THIS WAY " ◁ " ARE RIGID CONN. & SHALL BE PER 14/S20, 15/S20, 10/S21 OR 11/S21 U.N.O.
3. BALANCE OF CONNECTIONS AT ROOF SHALL BE PER 16A/S20 AND ELSE WHERE PER 16/S20

S8-7 SMF MOMENT FRAME ELEVATION NOTES
7 1" = 1'-0"

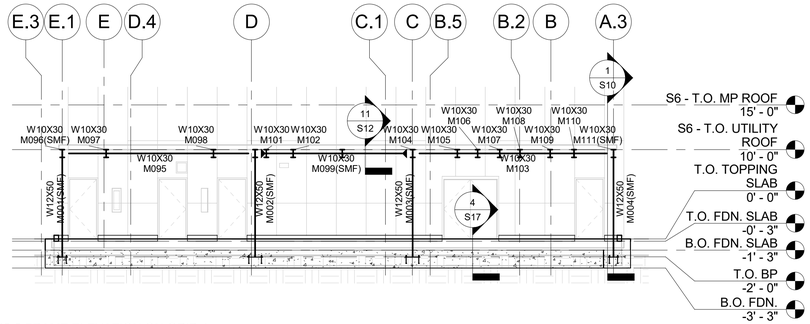

2 S8-2 FRAME ELEVATION ON GRID 1
1/8" = 1'-0"

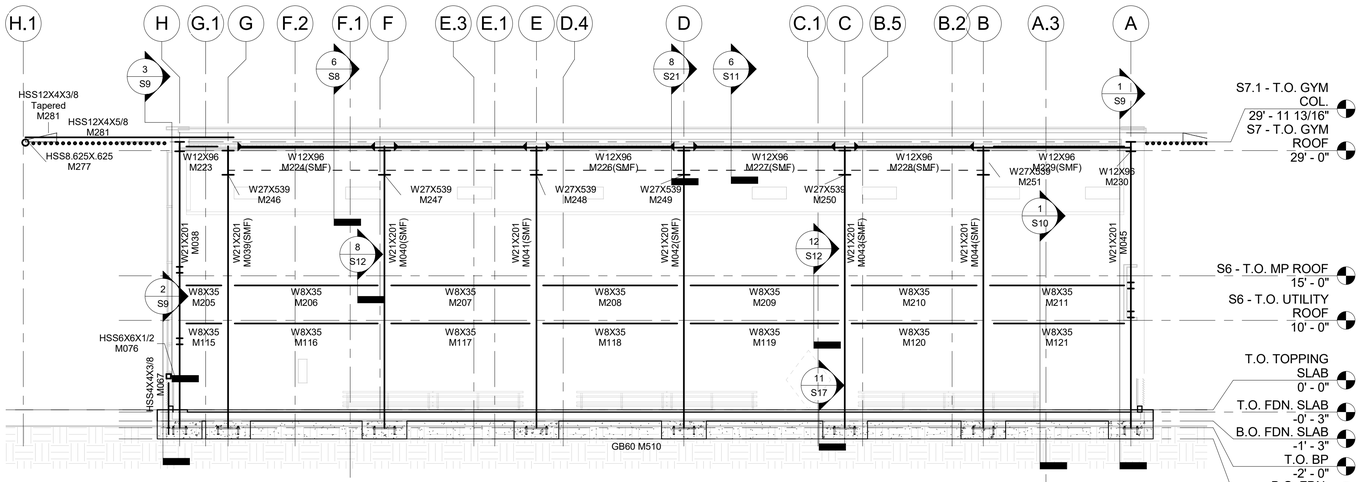

3 S8-3 FRAME ELEVATION ON GRID 2
1/8" = 1'-0"

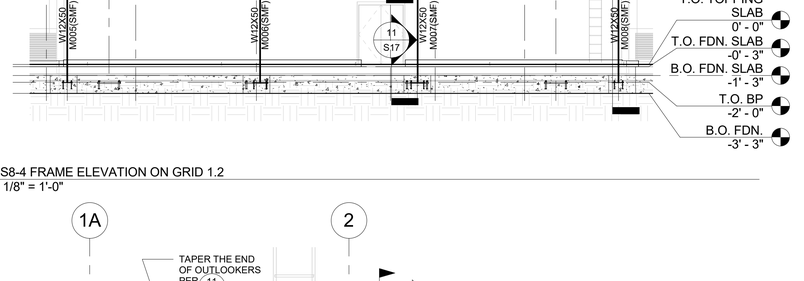

4 S8-4 FRAME ELEVATION ON GRID 1.2
1/8" = 1'-0"

NOTE: SEE ARCH. DWGS. FOR ALL DETAILS

5 S8-5 FRAME ELEVATION ON GRID 1A
1/8" = 1'-0"

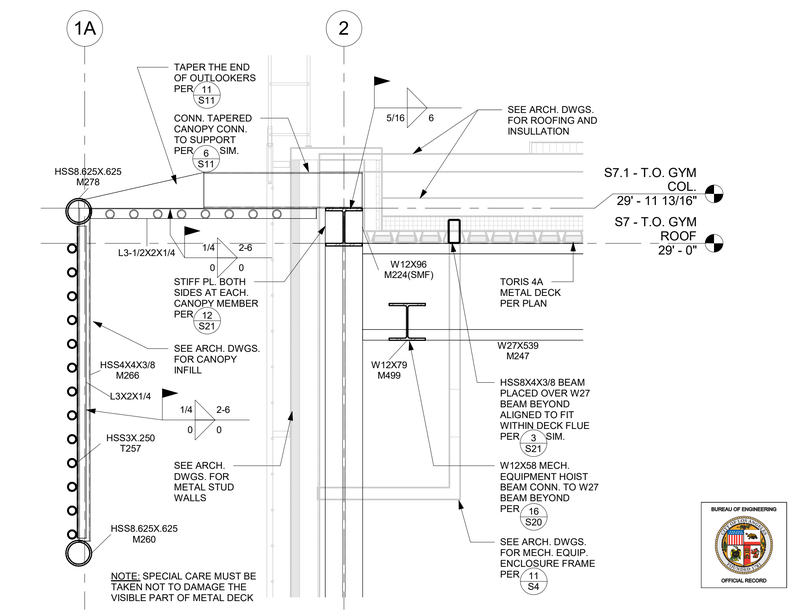

6 S8-6 BUILDING SECTION ON GRID 1A
1/2" = 1'-0"

THE CITY OF LOS ANGELES OR ITS OFFICERS OR AGENTS SHALL NOT BE RESPONSIBLE FOR THE ACCURACY OR COMPLETENESS OF ELECTRONIC COPIES OF THIS PLAN SHEET.

TTLB TEMPLATE REVISION DATE: 02/2013
SHEET ISSUE DATE: 26 APR 19
FILE PATH: BIM 360://Studio City Recreation Center/SCRC-Structural.rvt

REVISION DATES (DESIGN STAGE ONLY)

BUREAU OF ENGINEERING
CITY OF LOS ANGELES
ENGINEERING

NO.	REVISION DESCRIPTION	DATE	BY

BUILDING NO. -
INDEX NO. RP-300106

DEPARTMENT OF PUBLIC WORKS
CITY OF LOS ANGELES

TED ALLEN, PE
ARCHITECTURAL DIVISION
ENGINEER: NAST ENTERPRISES CORP. LIC. NO.: C-62199
DESIGNED BY: H.N.
DRAWN BY: H.N.
CHECKED BY: H.N.
APPROVED BY: MAHMOOD KARIMZADEH, AIA, DEPUTY CITY ENGINEER

REGISTERED PROFESSIONAL ENGINEER MAHMOOD KARIMZADEH NO. C-62199 EXP. 09-30-19 CIVIL STATE OF CALIFORNIA

CITY ENGINEER	DATE:
	29 APR 19
	29 APR 19
	29 APR 19
	29 APR 19
CITY ENGINEER	29 APR 19

VERTICAL CONTROL:
HORIZONTAL CONTROL:

SHEET TITLE: MOMENT FRAME ELEVATIONS AND BUILDING SECTIONS
PROJECT: STUDIO CITY GYMNASIUM
ADDRESS: 12621 RYE STREET, STUDIO CITY, CA 91604

ST Enterprises Corp.
504 E San Ysidro Blvd., #202, Los Angeles, CA 90048
Tel: (310) 210 - 3238

BUREAU OF ENGINEERING OFFICIAL RECORD

WORK ORDER NO.
Project Number
PLAN FILE NO.
DRAWING NO.
S8
SHEET 122 OF SHEETS 211

PLOTTED:4/30/2019 5:27:36 PM

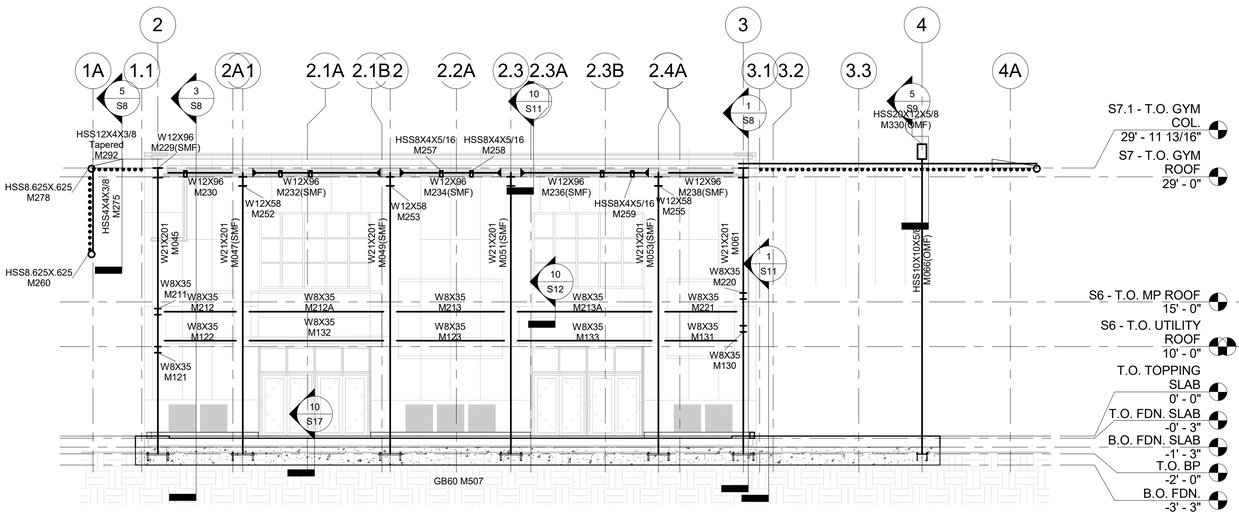

1 S9-1 FRAME ELEVATION ON GRID A
1/8" = 1'-0"

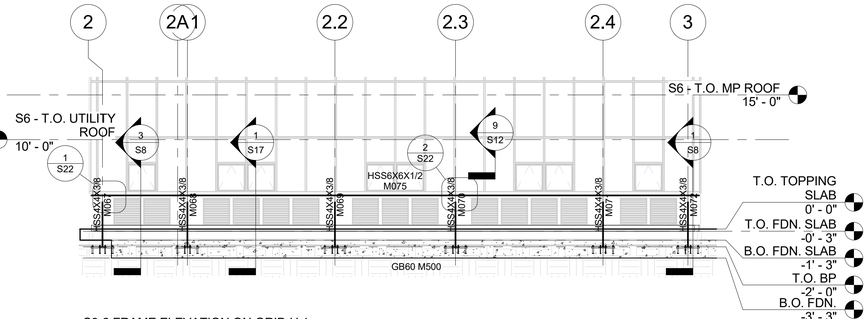

2 S9-2 FRAME ELEVATION ON GRID H.1
1/8" = 1'-0"

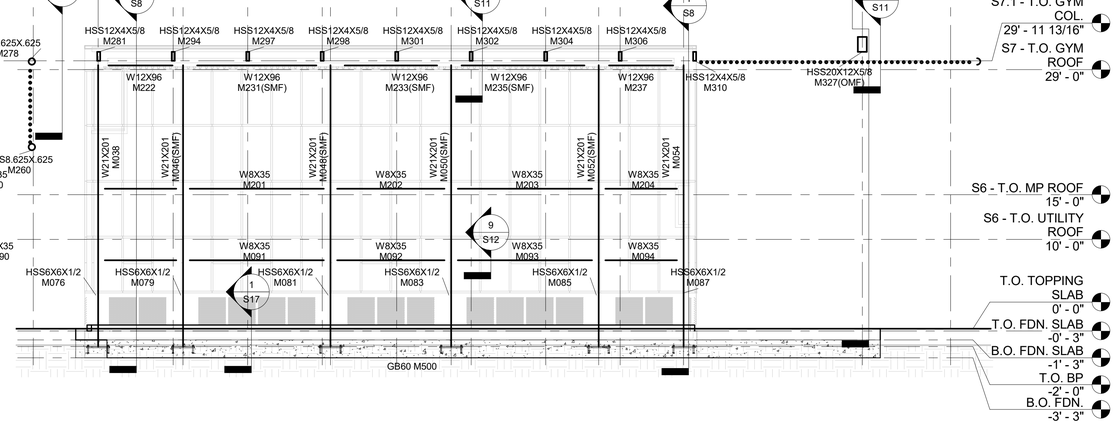

3 S9-3 FRAME ELEVATION ON GRID H
1/8" = 1'-0"

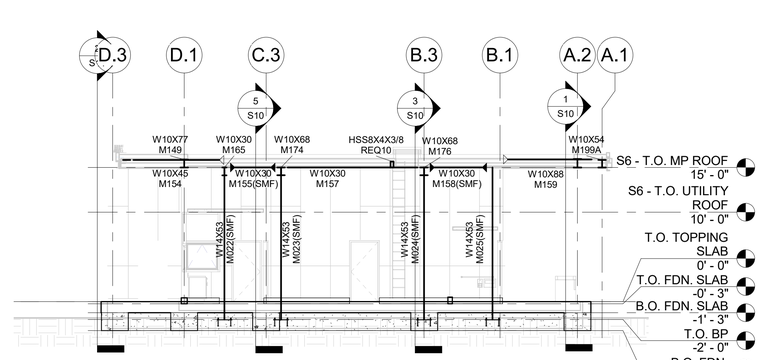

4 S9-4 FRAME ELEVATION ON GRID 5
1/8" = 1'-0"

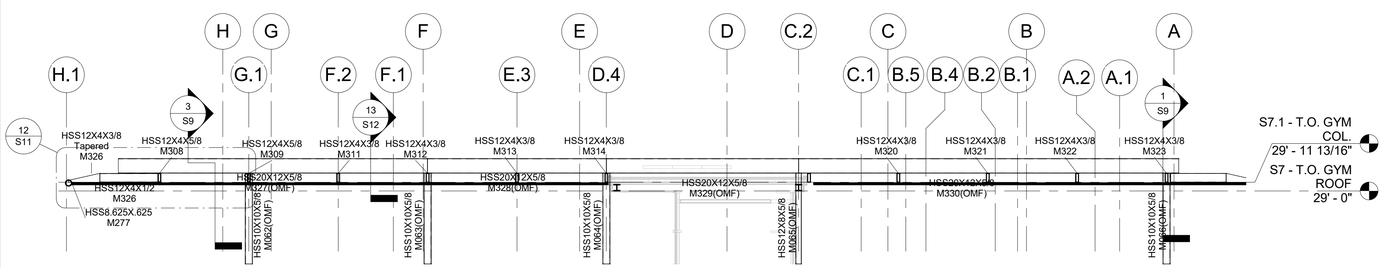

5 S9-5 FRAME ELEVATION ON GRID 4
1/8" = 1'-0"

SMF MOMENT FRAME ELEVATION NOTES: (S9)

1. ALL CONNECTIONS SHOWN THIS WAY "SMF ◀ " PERTAIN TO SPECIAL MOMENT FRAME & SHALL BE PER SHEET S10. ALL SMF BEAMS SHALL BE ORTHOGONAL TO COLS.
2. OTHER JOISTS SHOWN THIS WAY " ◁ " ARE RIGID CONN. & SHALL BE PER 14/S20, 15/S20, 10/S21 OR 11/S21 U.N.O.
3. BALANCE OF CONNECTIONS AT ROOF SHALL BE PER 16A/S20 AND ELSE WHERE PER 16/S20

6 S9-6 SMF MOMENT FRAME ELEVATION NOTES
1" = 1'-0"

THE CITY OF LOS ANGELES OR ITS OFFICERS OR AGENTS SHALL NOT BE RESPONSIBLE FOR THE ACCURACY OR COMPLETENESS OF ELECTRONIC COPIES OF THIS PLAN SHEET.

TTLB TEMPLATE REVISION DATE: 02/2013
SHEET ISSUE DATE: 26 APR 19
FILE PATH: BIM 360://Studio City Recreation Center/SCRC-Structural.rvt

REVISION DATES: (DESIGN STAGE ONLY)

BUREAU OF ENGINEERING
DEPARTMENT OF PUBLIC WORKS
CITY OF LOS ANGELES

ENGINEERING
CITY OF LOS ANGELES

NO.	REVISION DESCRIPTION	DATE	BY

BUILDING NO. -
INDEX NO. RP-300106

REGISTERED PROFESSIONAL ENGINEER
NASTARIN
NO. C-62199
EXP. 09-30-19
CIVIL
STATE OF CALIFORNIA

CITY ENGINEER	
DATE:	29 APR 19
VERTICAL CONTROL:	29 APR 19
HORIZONTAL CONTROL:	29 APR 19
SHEET TITLE:	MOMENT FRAME ELEVATIONS AND BUILDING SECTIONS
PROJECT:	STUDIO CITY GYMNASIUM
ADDRESS:	12621 RYE STREET, STUDIO CITY, CA 91604

DEPARTMENT OF PUBLIC WORKS
CITY OF LOS ANGELES

TED ALLEN, PE
CITY ENGINEER

ENGINEER:	NAST ENTERPRISES CORP. LIC. NO.: C-62199
ARCHITECTURAL DIVISION	
DESIGNED BY:	H.N.
DRAWN BY:	H.N.
CHECKED BY:	H.N.
APPROVED BY:	MAHMOOD KARIMZADEH, AIA, DEPUTY CITY ENGINEER

BUREAU OF ENGINEERING
OFFICIAL RECORD

CITY OF LOS ANGELES
ST Enterprises Corp.
554 S San Vicente Blvd., #202, Los Angeles, CA 90048
Tel: (310) 210 - 3238

WORK ORDER NO.
Project Number
PLAN FILE NO.
DRAWING NO.
S9
SHEET 123 OF SHEETS 211

PLOTTED:4/30/2019 5:27:40 PM

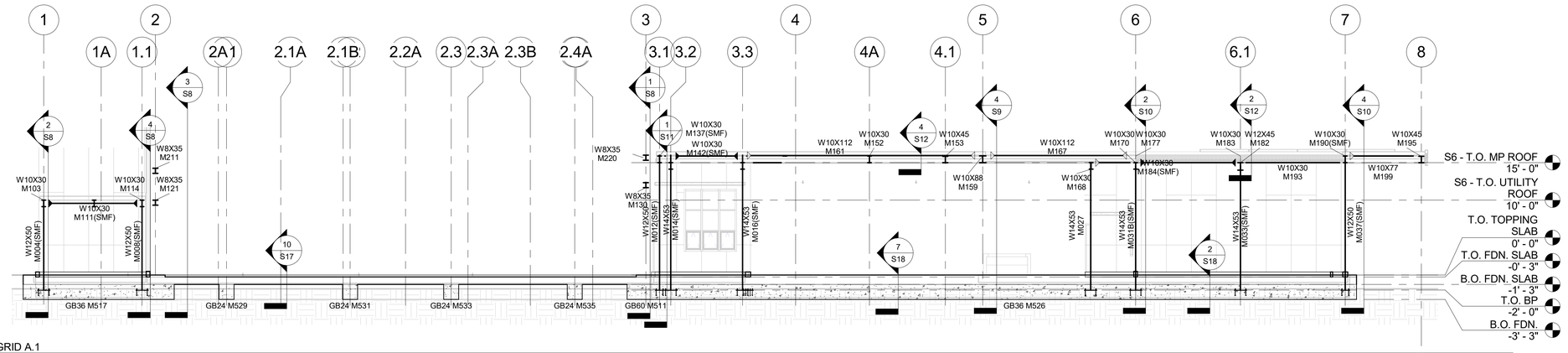

1 S10-1 FRAME ELEVATION ON GRID A.1
1/8" = 1'-0"

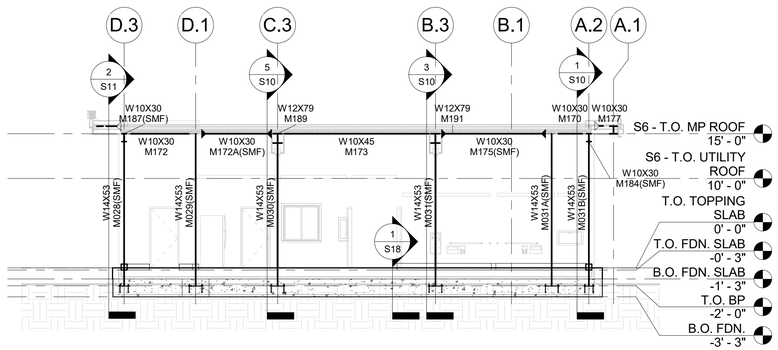

2 S10-2 FRAME ELEVATION ON GRID 6
1/8" = 1'-0"

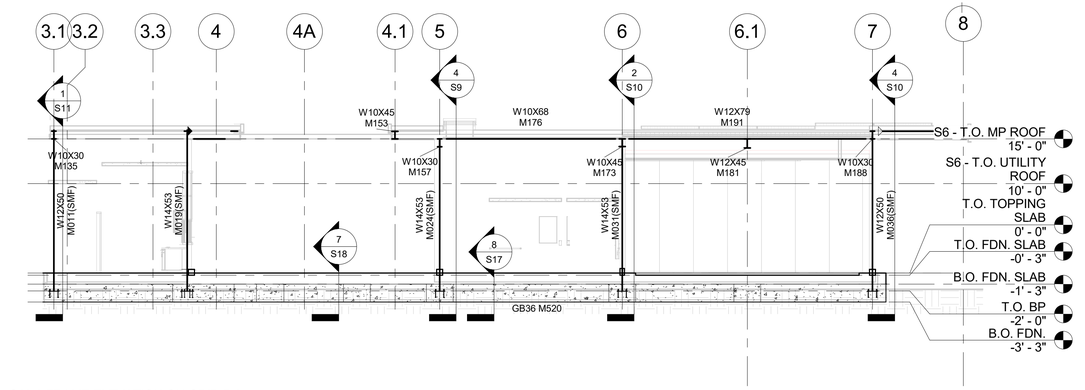

3 S10-3 FRAME ELEVATION ON GRID B.3
1/8" = 1'-0"

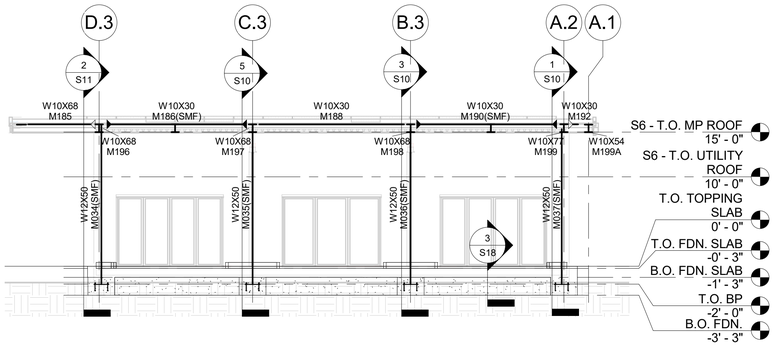

4 S10-4 FRAME ELEVATION ON GRID 7
1/8" = 1'-0"

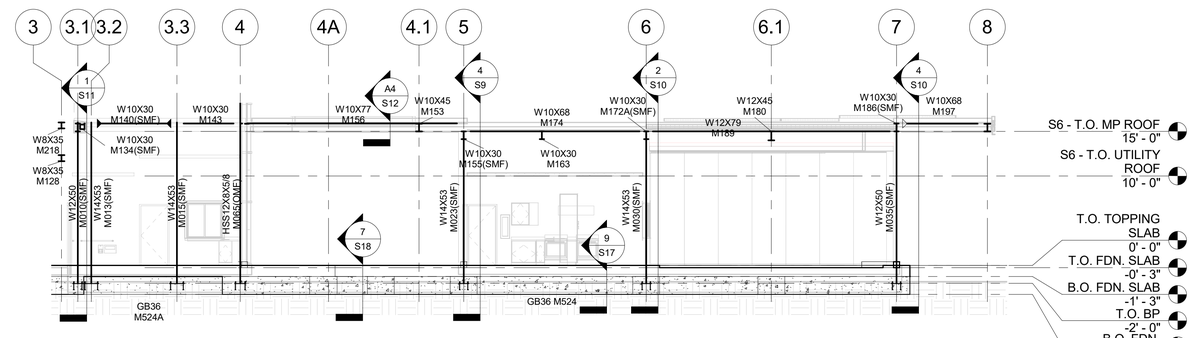

5 S10-5 FRAME ELEVATION ON GRID C.2 & C.3
1/8" = 1'-0"

SMF MOMENT FRAME ELEVATION NOTES: (S10)

1. ALL CONNECTIONS SHOWN THIS WAY "SMF ◀ " PERTAIN TO SPECIAL MOMENT FRAME & SHALL BE PER SHEET S10. ALL SMF BEAMS SHALL BE ORTHOGONAL TO COLS.
2. OTHER JOISTS SHOWN THIS WAY " ◁ " ARE RIGID CONN. & SHALL BE PER 14/S20, 15/S20, 10/S21 OR 11/S21 U.N.O.
3. BALANCE OF CONNECTIONS AT ROOF SHALL BE PER 16A/S20 AND ELSE WHERE PER 16/S20

6 S10-6 SMF MOMENT FRAME ELEVATION NOTES
1" = 1'-0"

BUREAU OF ENGINEERING
OFFICIAL RECORD

THE CITY OF LOS ANGELES OR ITS OFFICERS OR AGENTS SHALL NOT BE RESPONSIBLE FOR THE ACCURACY OR COMPLETENESS OF ELECTRONIC COPIES OF THIS PLAN SHEET.

TTLB TEMPLATE REVISION DATE: 02/2013
SHEET ISSUE DATE: 26 APR 19
FILE PATH: BIM 360://Studio City Recreation Center/SCRC-Structural.rvt

REVISION DATES (DESIGN STAGE ONLY)

BUREAU OF ENGINEERING
ENGINEERING
CITY OF LOS ANGELES

NO.	REVISION DESCRIPTION	DATE	BY

BUILDING NO. -
INDEX NO. RP-300106

REGISTERED PROFESSIONAL ENGINEER
M.A.T.A.R.I.N.
HOWAN
NO. C-62199
Exp. 09-30-19
CIVIL
STATE OF CALIFORNIA

DEPARTMENT OF PUBLIC WORKS
TED ALLEN, PE
CITY ENGINEER

ARCHITECTURAL DIVISION		
ENGINEER:	NAST ENTERPRISES CORP.	LIC. NO.: C-62199
DESIGNED BY:	H.N.	DATE: 29 APR. 19
DRAWN BY:	H.N.	DATE: 29 APR. 19
CHECKED BY:	H.N.	DATE: 29 APR. 19
APPROVED BY:	MAHMOOD KARIMZADEH, AIA, DEPUTY CITY ENGINEER	DATE: 29 APR. 19

CITY OF LOS ANGELES
VERTICAL CONTROL:
HORIZONTAL CONTROL:

SHEET TITLE: MOMENT FRAME ELEVATIONS AND BUILDING SECTIONS

PROJECT: STUDIO CITY GYMNASIUM

ADDRESS: 12621 RYE STREET, STUDIO CITY, CA 91604

ST Enterprises Corp.
504 E San Fernando Blvd., #202, Los Angeles, CA 90048 Tel: (310) 210 - 3238

WORK ORDER NO. Project Number
PLAN FILE NO.
DRAWING NO. S10
SHEET 124 OF SHEETS 211

PLOTTED:4/30/2019 5:27:46 PM

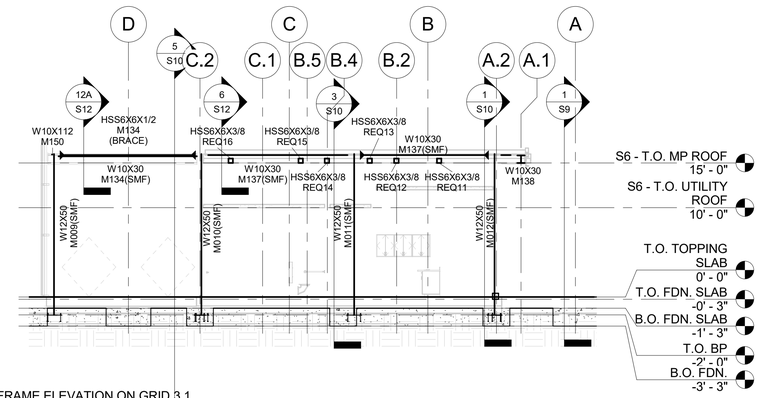

1 S11-1 FRAME ELEVATION ON GRID 3.1
1/8" = 1'-0"

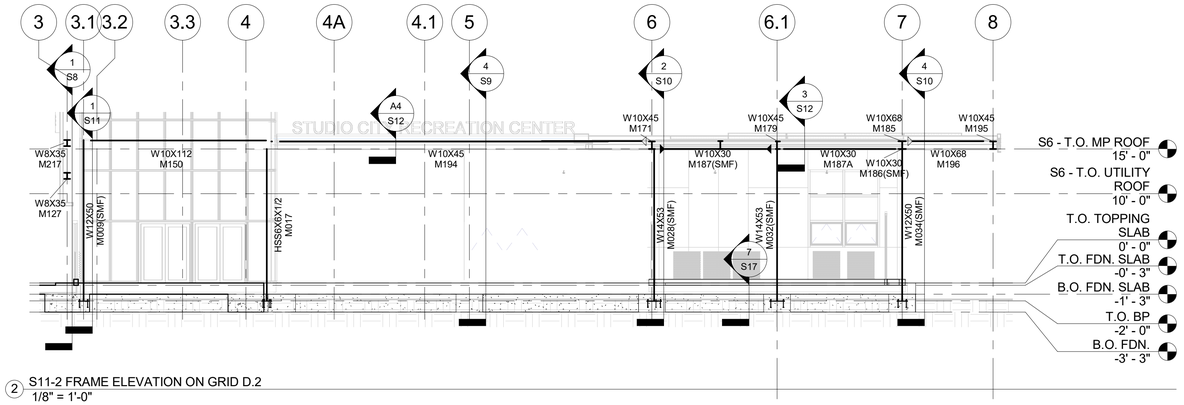

2 S11-2 FRAME ELEVATION ON GRID D.2
1/8" = 1'-0"

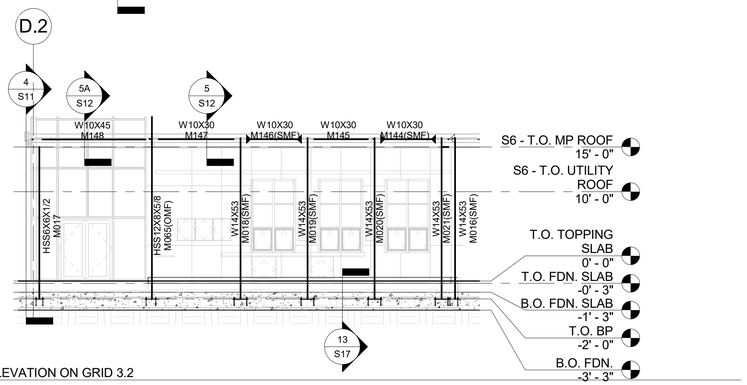

3 S11-3 FRAME ELEVATION ON GRID 3.2
1/8" = 1'-0"

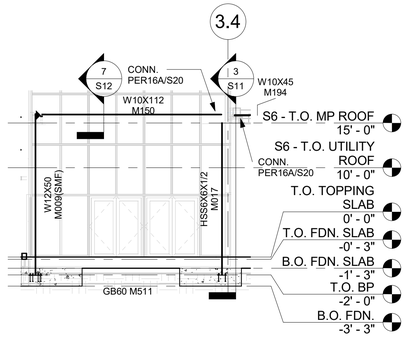

4 S11-4 FRAME ELEVATION ON GRID D.2
1/8" = 1'-0"

SMF MOMENT FRAME ELEVATION NOTES: (S11)

1. ALL CONNECTIONS SHOWN THIS WAY "SMF ◀ " PERTAIN TO SPECIAL MOMENT FRAME & SHALL BE PER SHEET S10. ALL SMF BEAMS SHALL BE ORTHOGONAL TO COLS.
2. OTHER JOISTS SHOWN THIS WAY "◁ " ARE RIGID CONN. & SHALL BE PER 14/S20, 15/S20, 10/S21 OR 11/S21 U.N.O.
3. BALANCE OF CONNECTIONS AT ROOF SHALL BE PER 16A/S20 AND ELSE WHERE PER 16/S20

5 S11-5 SMF MOMENT FRAME ELEVATION NOTES
1" = 1'-0"

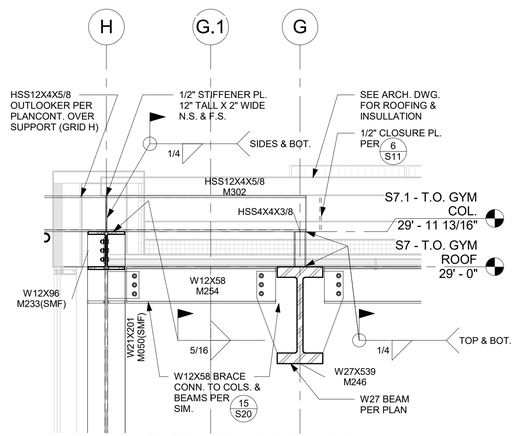

NOTE: SPECIAL CARE MUST BE TAKEN NOT TO DAMAGE THE VISIBLE PART OF METAL DECK.

9 S11-9 SOUTH CANOPY CONNECTION
1/2" = 1'-0"

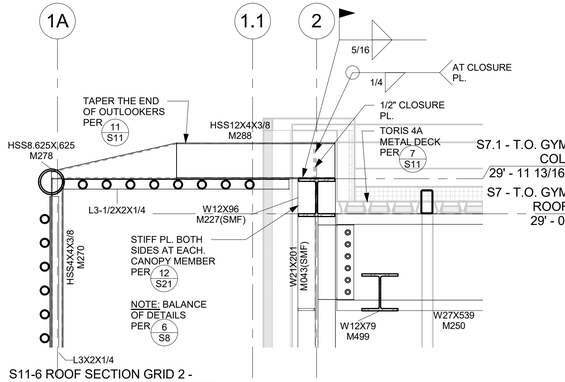

6 S11-6 ROOF SECTION GRID 2 - OUTLOOKER CONN. TO SUPPORT
1/2" = 1'-0"

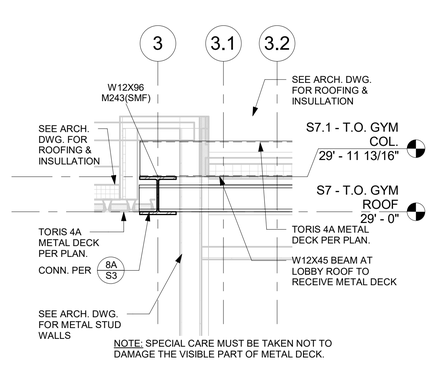

NOTE: SPECIAL CARE MUST BE TAKEN NOT TO DAMAGE THE VISIBLE PART OF METAL DECK.

7 S11-7 ROOF SECTION GRID 3 & 3.1
1/2" = 1'-0"

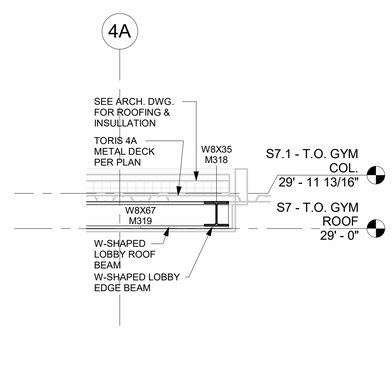

8 S11-8 ROOF SECTION GRID 4A
1/2" = 1'-0"

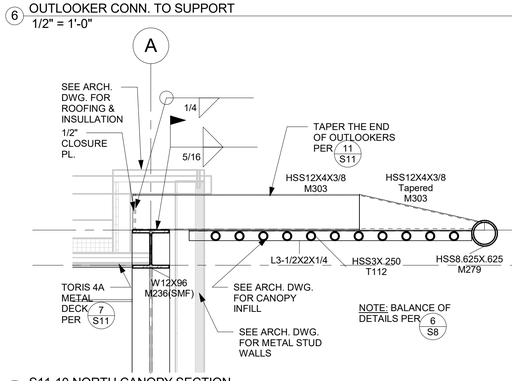

10 S11-10 NORTH CANOPY SECTION
1/2" = 1'-0"

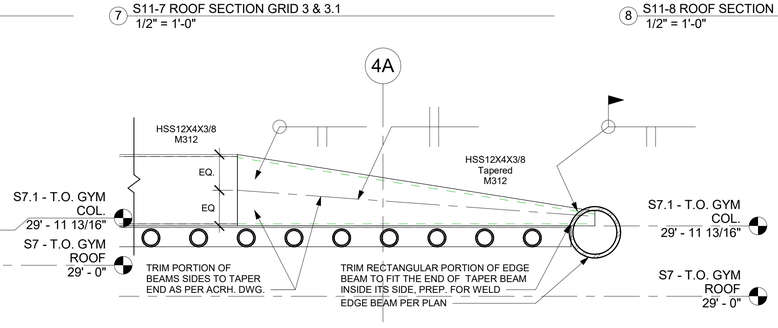

11 S11-11 CANOPY EDGE SECTION NEAR GRID 4A - OUTLOOKER END TAPER DETAIL
1" = 1'-0"

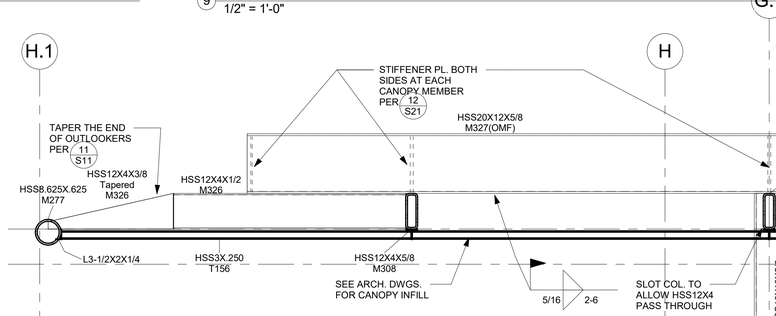

12 S11-12 CANOPY EDGE SECTION NEAR GRID H
1/2" = 1'-0"

THE CITY OF LOS ANGELES OR ITS OFFICERS OR AGENTS SHALL NOT BE RESPONSIBLE FOR THE ACCURACY OR COMPLETENESS OF ELECTRONIC COPIES OF THIS PLAN SHEET.

TTLB TEMPLATE REVISION DATE: 02/2013
SHEET ISSUE DATE: 26-APR-19
FILE PATH: BIM 360://Studio City Recreation Center/SCRC-Structural.rvt

REVISION DATES (DESIGN STAGE ONLY)

BUREAU OF ENGINEERING
ENGINEERING
CITY OF LOS ANGELES

NO.	REVISION DESCRIPTION	DATE	BY

BUILDING NO. -
INDEX NO. RP-300106

REGISTERED PROFESSIONAL ENGINEER NASTARIN NO. C-62199 EXP. 09-30-19 CIVIL STATE OF CALIFORNIA

DEPARTMENT OF PUBLIC WORKS
CITY OF LOS ANGELES

TED ALLEN, PE
ARCHITECTURAL DIVISION

ENGINEER:	NAST ENTERPRISES CORP.	LIC. NO.: C-62199	
DESIGNED BY:	H.N.	DATE:	29 APR. 19
DRAWN BY:	H.N.	DATE:	29 APR. 19
CHECKED BY:	H.N.	DATE:	29 APR. 19
APPROVED BY:	MAHMOOD KARIMZADEH, AIA, DEPUTY CITY ENGINEER	DATE:	29 APR. 19

BUREAU OF ENGINEERING OFFICIAL RECORD

CITY OF LOS ANGELES
VERTICAL CONTROL: CAD048
HORIZONTAL CONTROL:

SHEET TITLE: MOMENT FRAME ELEVATIONS AND BUILDING SECTIONS
PROJECT: STUDIO CITY GYMNASIUM
ADDRESS: 12621 RYE STREET, STUDIO CITY, CA 91604

ST Enterprises Corp.
304 S. San Vicente Blvd., #202 Tel: (310) 210 - 3238

WORK ORDER NO. Project Number
PLAN FILE NO.
DRAWING NO. S11
SHEET 125 OF SHEETS 211

PLOTTED:4/30/2019 5:27:51 PM

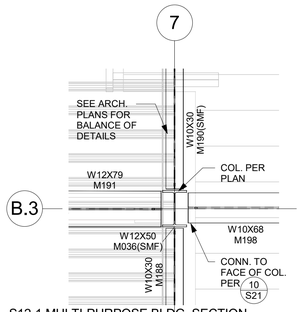

S12-1 MULTI-PURPOSE BLDG. SECTION
GRID 7 & B.3 - SUPPORT CANTILEVERS
1 1/2" = 1'-0"

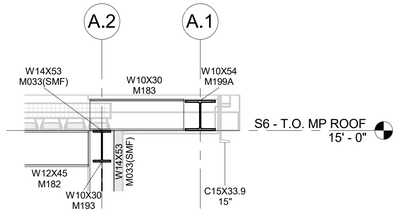

S12-2 MULTI-PURPOSE BLDG. SECTION
GRID A.1 & A.2
2 1/2" = 1'-0"

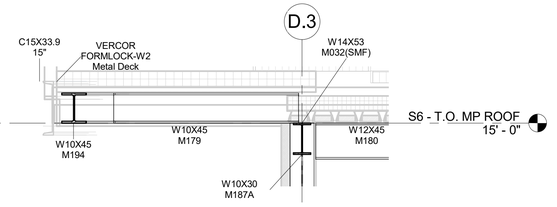

S12-3 MULTI-PURPOSE BLDG. SECTION
GRID D.2
3 1/2" = 1'-0"

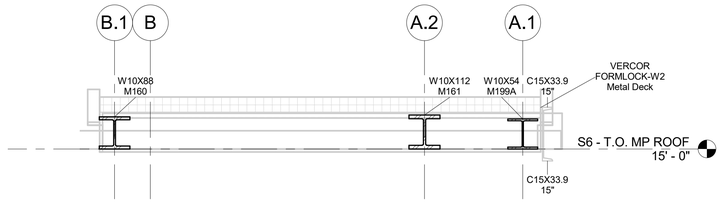

S12-4 MULTI-PURPOSE BLDG. SECTION
4 1/2" = 1'-0"

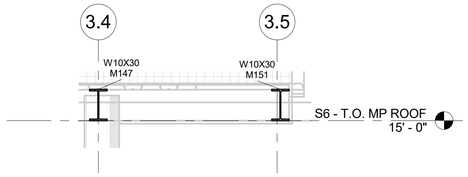

S12-5 MULTI-PURPOSE BLDG. SECTION
GRID 3.2 & 3.3
5 1/2" = 1'-0"

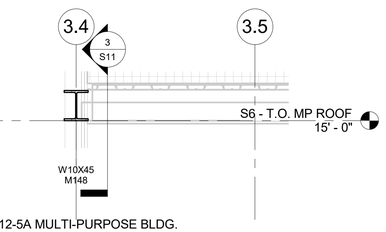

S12-5A MULTI-PURPOSE BLDG.
SECTION GRID 3.2 & 3.1
5A 1/2" = 1'-0"

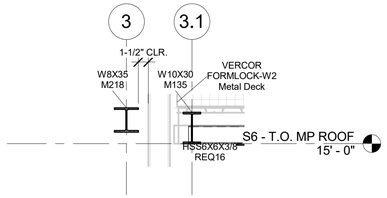

S12-6 MULTI-PURPOSE BLDG. SECTION
GRID 3 & 3.1
6 1/2" = 1'-0"

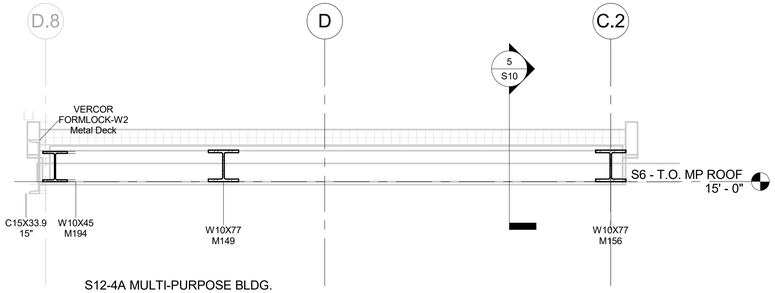

S12-4A MULTI-PURPOSE BLDG.
SECTION1
A4 1/2" = 1'-0"

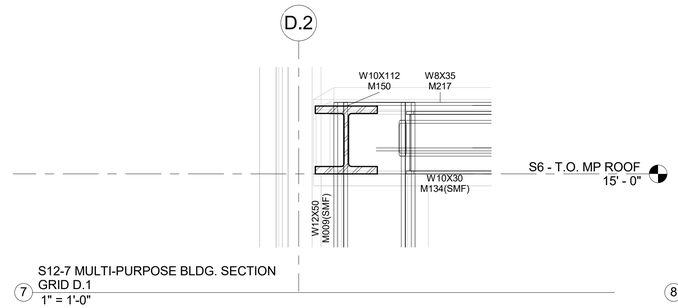

S12-7 MULTI-PURPOSE BLDG. SECTION
GRID D.1
7 1" = 1'-0"

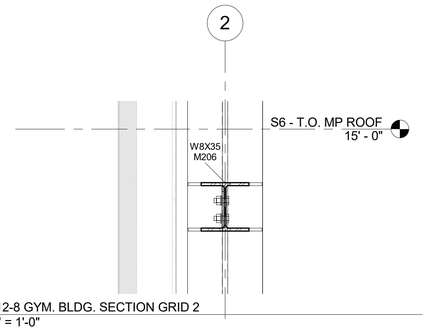

S12-8 GYM. BLDG. SECTION GRID 2
8 1" = 1'-0"

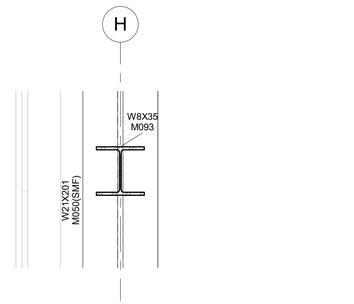

S12-9 GYM BLDG. SECTION GRID H
9 1" = 1'-0"

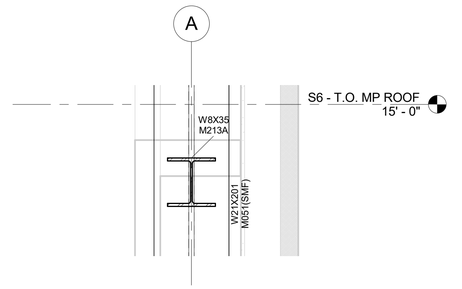

S12-10 GYM. BLDG. SECTION GRID A
10 1" = 1'-0"

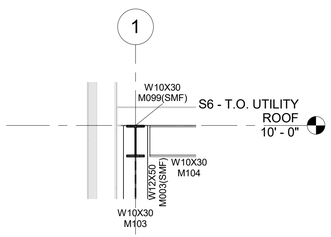

S12-11 UTILITY ROOM SECTION GRID A
11 1/2" = 1'-0"

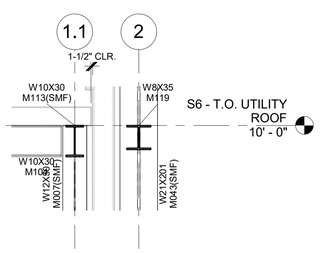

S12-12 UTILITY ROOM SECTION GRID 2
12 1/2" = 1'-0"

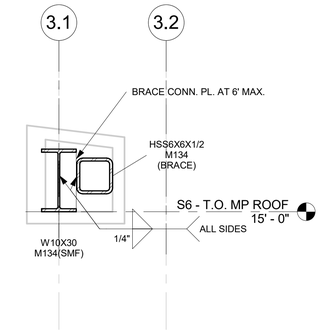

S12-12A LOBBY SECTION 3.1 & 3.2
12A 1" = 1'-0"

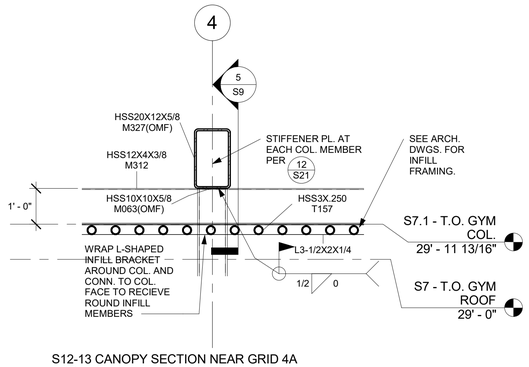

S12-13 CANOPY SECTION NEAR GRID 4A
- COL. BEAM INTERACTION WITH INFILL
13 1/2" = 1'-0"

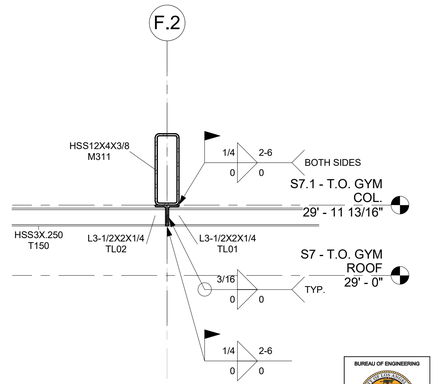

S12-14 Canopy Infill Conn.
14 1" = 1'-0"

BUREAU OF ENGINEERING

CITY OF LOS ANGELES

DEPARTMENT OF PUBLIC WORKS

ENGINEERING
CITY OF LOS ANGELES

NO.	REVISION DESCRIPTION	DATE	BY

BUILDING NO. -

INDEX NO. RP-300106

REGISTERED PROFESSIONAL ENGINEER HOWARD N. KATARIN NO. C-62199 Exp. 09-30-19 CIVIL STATE OF CALIFORNIA

TED ALLEN, PE
ARCHITECTURAL DIVISION
ENGINEER: NAST ENTERPRISES CORP. LIC. NO: C-62199
DESIGNED BY: H.N.
DRAWN BY: H.N.
CHECKED BY: H.N.
APPROVED BY: MAHMOOD KARIMZADEH, AIA, DEPUTY CITY ENGINEER

CITY ENGINEER	DATE
	29 APR 19
	29 APR 19
	29 APR 19
	29 APR 19
	29 APR 19

VERTICAL CONTROL:
HORIZONTAL CONTROL:

SHEET TITLE: MULTI-PURPOSE BLDG. SECTIONS

PROJECT: STUDIO CITY GYMNASIUM

ADDRESS: 12621 RYE STREET, STUDIO CITY, CA 91604

ST Enterprises Corp.
524 S San Vicente Blvd., #202, Los Angeles, CA 90048 Tel: (310) 210 - 3238

WORK ORDER NO. Project Number
PLAN FILE NO.
DRAWING NO. S12
SHEET 126 OF SHEETS 211

BUREAU OF ENGINEERING
OFFICIAL RECORD

PLOTTED:4/30/2019 5:27:56 PM

THE CITY OF LOS ANGELES OR ITS OFFICERS OR AGENTS SHALL NOT BE RESPONSIBLE FOR THE ACCURACY OR COMPLETENESS OF ELECTRONIC COPIES OF THIS PLAN SHEET.

TTLB TEMPLATE REVISION DATE: 02/2013
SHEET ISSUE DATE: 26 APR 19
FILE PATH: BIM 360://Studio City Recreation Center/SCRC-Structural.rvt

REVISION DATES (DESIGN STAGE ONLY)

Structural Column Schedule

Mark	Column Location Mark	Base Level	Base Offset	Top Level	Top Offset	Type	Comments	Structural Material	Length	Keynote
M001(SMF)	E.1-1	T.O. BP	0' - 0"	S6 - T.O. UTILITY ROOF	0' - 0"	W12X50		Steel ASTM A992	12' - 0"	
M002(SMF)	D-1	T.O. BP	0' - 0"	S6 - T.O. UTILITY ROOF	0' - 0"	W12X50		Steel ASTM A992	12' - 0"	
M003(SMF)	C-1	T.O. BP	0' - 0"	S6 - T.O. UTILITY ROOF	0' - 0"	W12X50		Steel ASTM A992	12' - 0"	
M004(SMF)	A.3-1	T.O. BP	0' - 0"	S6 - T.O. UTILITY ROOF	0' - 0"	W12X50		Steel ASTM A992	12' - 0"	
M005(SMF)	E.1-1.1	T.O. BP	0' - 0"	S6 - T.O. UTILITY ROOF	0' - 0"	W12X50		Steel ASTM A992	12' - 0"	
M006(SMF)	D-1.1	T.O. BP	0' - 0"	S6 - T.O. UTILITY ROOF	0' - 0"	W12X50		Steel ASTM A992	12' - 0"	
M007(SMF)	C-1.1	T.O. BP	0' - 0"	S6 - T.O. UTILITY ROOF	0' - 0"	W12X50		Steel ASTM A992	12' - 0"	
M008(SMF)	A.3-1.1	T.O. BP	0' - 0"	S6 - T.O. UTILITY ROOF	0' - 0"	W12X50		Steel ASTM A992	12' - 0"	
M009(SMF)	D.2(1' - 0 23/32")-3.1	T.O. BP	0' - 0"	S6 - T.O. MP ROOF	1' - 0"	W12X50		Steel ASTM A992	18' - 0"	
M010(SMF)	C.2-3.1	T.O. BP	0' - 0"	S6 - T.O. MP ROOF	1' - 0"	W12X50		Steel ASTM A992	18' - 0"	
M011(SMF)	B.4(3' - 0")-3.1	T.O. BP	0' - 0"	S6 - T.O. MP ROOF	1' - 0"	W12X50		Steel ASTM A992	18' - 0"	
M012(SMF)	A.2-3.1	T.O. BP	0' - 0"	S6 - T.O. MP ROOF	1' - 0"	W12X50		Steel ASTM A992	18' - 0"	
M013(SMF)	C.2-3.2	T.O. BP	0' - 0"	S6 - T.O. MP ROOF	1' - 0"	W14X53		Steel ASTM A992	18' - 0"	
M014(SMF)	A.2-3.2	T.O. BP	0' - 0"	S6 - T.O. MP ROOF	1' - 0"	W14X53		Steel ASTM A992	18' - 0"	
M015(SMF)	C.2-3.3	T.O. BP	0' - 0"	S6 - T.O. MP ROOF	1' - 0"	W14X53		Steel ASTM A992	18' - 0"	
M016(SMF)	A.2-3.3	T.O. BP	0' - 0"	S6 - T.O. MP ROOF	1' - 0"	W14X53		Steel ASTM A992	18' - 0"	
M017	D.2(0' - 8")-3.4(-0' - 8")	T.O. BP	0' - 0"	S6 - T.O. MP ROOF	0' - 0"	HSS6X6X1/2		Steel ASTM A992	17' - 0"	
M018(SMF)	C-3.4	T.O. BP	0' - 0"	S6 - T.O. MP ROOF	1' - 0"	W14X53		Steel ASTM A992	18' - 0"	
M019(SMF)	B.4(2' - 10 1/4")-3.4	T.O. BP	0' - 0"	S6 - T.O. MP ROOF	1' - 0"	W14X53		Steel ASTM A992	18' - 0"	
M020(SMF)	B(-1' - 0 23/32")-3.4	T.O. BP	0' - 0"	S6 - T.O. MP ROOF	1' - 0"	W14X53		Steel ASTM A992	18' - 0"	
M021(SMF)	A.2(-1' - 4 11/16")-3.3(0' - 8 17/32")	T.O. BP	0' - 0"	S6 - T.O. MP ROOF	1' - 0"	W14X53		Steel ASTM A992	18' - 0"	
M022(SMF)	C.3(-4' - 7 15/16")-5	T.O. BP	0' - 0"	S6 - T.O. MP ROOF	0' - 0"	W14X53		Steel ASTM A992	17' - 0"	
M023(SMF)	C.3(1' - 8")-5	T.O. BP	0' - 0"	S6 - T.O. MP ROOF	0' - 0"	W14X53		Steel ASTM A992	17' - 0"	
M024(SMF)	B.3-5	T.O. BP	0' - 0"	S6 - T.O. MP ROOF	0' - 0"	W14X53		Steel ASTM A992	17' - 0"	
M025(SMF)	B.1(-0' - 10")-5	T.O. BP	0' - 0"	S6 - T.O. MP ROOF	0' - 0"	W14X53		Steel ASTM A992	17' - 0"	
M026	D.3(8' - 0")-E.2(8' - 0 23/32")	T.O. BP	0' - 0"	S6 - T.O. MP ROOF	0' - 0"	W12X50		Steel ASTM A992	17' - 0"	
M027	A.2-6(-6' - 0")	T.O. BP	0' - 0"	S6 - T.O. MP ROOF	0' - 0"	W14X53		Steel ASTM A992	17' - 0"	
M028(SMF)	D.3-6	T.O. BP	0' - 0"	S6 - T.O. MP ROOF	0' - 0"	W14X53		Steel ASTM A992	17' - 0"	
M029(SMF)	D.1-6	T.O. BP	0' - 0"	S6 - T.O. MP ROOF	0' - 0"	W14X53		Steel ASTM A992	17' - 0"	
M030(SMF)	C.3-6	T.O. BP	0' - 0"	S6 - T.O. MP ROOF	0' - 0"	W14X53		Steel ASTM A992	17' - 0"	
M031(SMF)	B.3-6	T.O. BP	0' - 0"	S6 - T.O. MP ROOF	0' - 0"	W14X53		Steel ASTM A992	17' - 0"	
M031A(SMF)	A.2(-4' - 2")-6	T.O. BP	0' - 0"	S6 - T.O. MP ROOF	0' - 0"	W14X53		Steel ASTM A992	17' - 0"	
M031B(SMF)	A.2-6	T.O. BP	0' - 0"	S6 - T.O. MP ROOF	0' - 0"	W14X53		Steel ASTM A992	17' - 0"	
M032(SMF)	D.3-6.1	T.O. BP	0' - 0"	S6 - T.O. MP ROOF	0' - 0"	W14X53		Steel ASTM A992	17' - 0"	
M033(SMF)	A.2-6.1	T.O. BP	0' - 0"	S6 - T.O. MP ROOF	0' - 0"	W14X53		Steel ASTM A992	17' - 0"	
M034(SMF)	D.3-7	T.O. BP	0' - 0"	S6 - T.O. MP ROOF	0' - 10"	W12X50		Steel ASTM A992	17' - 10"	
M035(SMF)	C.3-7	T.O. BP	0' - 0"	S6 - T.O. MP ROOF	0' - 10"	W12X50		Steel ASTM A992	17' - 10"	
M036(SMF)	B.3-7	T.O. BP	0' - 0"	S6 - T.O. MP ROOF	0' - 10"	W12X50		Steel ASTM A992	17' - 10"	
M037(SMF)	A.2-7	T.O. BP	0' - 0"	S6 - T.O. MP ROOF	0' - 10"	W12X50		Steel ASTM A992	17' - 10"	
M038	H-2	T.O. BP	0' - 0"	S7.1 - T.O. GYM COL.	0' - 0"	W21X201		Steel ASTM A992	31' - 11 13/16"	
M039(SMF)	G-2	T.O. BP	0' - 0"	S7.1 - T.O. GYM COL.	0' - 0"	W21X201		Steel ASTM A992	31' - 11 13/16"	
M040(SMF)	F-2	T.O. BP	0' - 0"	S7.1 - T.O. GYM COL.	0' - 0"	W21X201		Steel ASTM A992	31' - 11 13/16"	
M041(SMF)	E-2	T.O. BP	0' - 0"	S7.1 - T.O. GYM COL.	0' - 0"	W21X201		Steel ASTM A992	31' - 11 13/16"	
M042(SMF)	D-2	T.O. BP	0' - 0"	S7.1 - T.O. GYM COL.	0' - 0"	W21X201		Steel ASTM A992	31' - 11 13/16"	
M043(SMF)	C-2	T.O. BP	0' - 0"	S7.1 - T.O. GYM COL.	0' - 0"	W21X201		Steel ASTM A992	31' - 11 13/16"	
M044(SMF)	B-2	T.O. BP	0' - 0"	S7.1 - T.O. GYM COL.	0' - 0"	W21X201		Steel ASTM A992	31' - 11 13/16"	
M045	A-2	T.O. BP	0' - 0"	S7.1 - T.O. GYM COL.	0' - 0"	W21X201		Steel ASTM A992	31' - 11 13/16"	
M046(SMF)	H-2.1	T.O. BP	0' - 0"	S7.1 - T.O. GYM COL.	0' - 0"	W21X201		Steel ASTM A992	31' - 11 13/16"	
M047(SMF)	A-2.1	T.O. BP	0' - 0"	S7.1 - T.O. GYM COL.	0' - 0"	W21X201		Steel ASTM A992	31' - 11 13/16"	
M048(SMF)	H-2.2	T.O. BP	0' - 0"	S7.1 - T.O. GYM COL.	0' - 0"	W21X201		Steel ASTM A992	31' - 11 13/16"	
M049(SMF)	A-2.2	T.O. BP	0' - 0"	S7.1 - T.O. GYM COL.	0' - 0"	W21X201		Steel ASTM A992	31' - 11 13/16"	
M050(SMF)	H-2.3	T.O. BP	0' - 0"	S7.1 - T.O. GYM COL.	0' - 0"	W21X201		Steel ASTM A992	31' - 11 13/16"	
M051(SMF)	A-2.3	T.O. BP	0' - 0"	S7.1 - T.O. GYM COL.	0' - 0"	W21X201		Steel ASTM A992	31' - 11 13/16"	
M052(SMF)	H-2.4	T.O. BP	0' - 0"	S7.1 - T.O. GYM COL.	0' - 0"	W21X201		Steel ASTM A992	31' - 11 13/16"	
M053(SMF)	A-2.4	T.O. BP	0' - 0"	S7.1 - T.O. GYM COL.	0' - 0"	W21X201		Steel ASTM A992	31' - 11 13/16"	
M054	H-3	T.O. BP	0' - 0"	S7.1 - T.O. GYM COL.	0' - 0"	W21X201		Steel ASTM A992	31' - 11 13/16"	
M055(SMF)	G-3	T.O. BP	0' - 0"	S7.1 - T.O. GYM COL.	0' - 0"	W21X201		Steel ASTM A992	31' - 11 13/16"	
M056(SMF)	F-3	T.O. BP	0' - 0"	S7.1 - T.O. GYM COL.	0' - 0"	W21X201		Steel ASTM A992	31' - 11 13/16"	
M057(SMF)	E-3	T.O. BP	0' - 0"	S7.1 - T.O. GYM COL.	0' - 0"	W21X201		Steel ASTM A992	31' - 11 13/16"	
M058(SMF)	D-3	T.O. BP	0' - 0"	S7.1 - T.O. GYM COL.	0' - 0"	W21X201		Steel ASTM A992	31' - 11 13/16"	
M059(SMF)	C-3	T.O. BP	0' - 0"	S7.1 - T.O. GYM COL.	0' - 0"	W21X201		Steel ASTM A992	31' - 11 13/16"	
M060(SMF)	B-3	T.O. BP	0' - 0"	S7.1 - T.O. GYM COL.	0' - 0"	W21X201		Steel ASTM A992	31' - 11 13/16"	
M061	A-3	T.O. BP	0' - 0"	S7.1 - T.O. GYM COL.	0' - 0"	W21X201		Steel ASTM A992	31' - 11 13/16"	
M062(OMF)	G.1-4	T.O. BP	0' - 0"	T.O. TOPPING SLAB	30' - 11 13/16"	HSS10X10X5/8		Steel ASTM A992	32' - 11 13/16"	
M063(OMF)	F(0' - 6")-4	T.O. BP	0' - 0"	T.O. TOPPING SLAB	31' - 0"	HSS10X10X5/8		Steel ASTM A992	33' - 0"	
M064(OMF)	D.4-4	T.O. BP	0' - 0"	T.O. TOPPING SLAB	31' - 0"	HSS10X10X5/8		Steel ASTM A992	33' - 0"	
M065(OMF)	C.2-4	T.O. BP	0' - 0"	T.O. TOPPING SLAB	31' - 0"	HSS12X8X5/8		Steel ASTM A992	33' - 0"	
M066(OMF)	A(-0' - 10")-4	T.O. BP	0' - 0"	T.O. TOPPING SLAB	31' - 0"	HSS10X10X5/8		Steel ASTM A992	33' - 0"	
M067	H(-1' - 2 25/32")-2	T.O. BP	0' - 0"	T.O. TOPPING SLAB	3' - 6"	HSS4X4X3/8		Steel ASTM A992	5' - 6"	
M068	H(-1' - 2 25/32")-2A(1' - 1 5/32")	T.O. BP	0' - 0"	T.O. TOPPING SLAB	3' - 6"	HSS4X4X3/8		Steel ASTM A992	5' - 6"	
M069	H(-1' - 2 25/32")-2.1B(0' - 11 5/32")	T.O. BP	0' - 0"	T.O. TOPPING SLAB	3' - 6"	HSS4X4X3/8		Steel ASTM A992	5' - 6"	
M070	H(-1' - 2 25/32")-2.3	T.O. BP	0' - 0"	T.O. TOPPING SLAB	3' - 6"	HSS4X4X3/8		Steel ASTM A992	5' - 6"	
M071	H(-1' - 2 25/32")-2.4	T.O. BP	0' - 0"	T.O. TOPPING SLAB	3' - 6"	HSS4X4X3/8		Steel ASTM A992	5' - 6"	
M072	H(-1' - 2 25/32")-3	T.O. BP	0' - 0"	T.O. TOPPING SLAB	3' - 6"	HSS4X4X3/8		Steel ASTM A992	5' - 6"	

THE CITY OF LOS ANGELES OR ITS OFFICERS OR AGENTS SHALL NOT BE RESPONSIBLE FOR THE ACCURACY OR COMPLETENESS OF ELECTRONIC COPIES OF THIS PLAN SHEET.

TTLB TEMPLATE REVISION DATE: 02/2013
SHEET ISSUE DATE: 26 APR 19
FILE PATH: BIM 360://Studio City Recreation Center/SCRC-Structural.rvt

REVISION DATES (DESIGN STAGE ONLY)

BUREAU OF ENGINEERING
OFFICIAL RECORD

BUREAU OF ENGINEERING
CITY OF LOS ANGELES

NO.	REVISION DESCRIPTION	DATE	BY

BUILDING NO. -
INDEX NO. RP-300106

REGISTERED PROFESSIONAL ENGINEER
NASTARIN
NO. C-62199
09-30-19
CIVIL
STATE OF CALIFORNIA

DEPARTMENT OF PUBLIC WORKS
CITY OF LOS ANGELES

TED ALLEN, PE
ARCHITECTURAL DIVISION

		DATE:
ENGINEER:	NAST ENTERPRISES CORP. LIC. NO.: C-62199	29 APR. 19
DESIGNED BY:	H.N.	29 APR. 19
DRAWN BY:	H.N.	29 APR. 19
CHECKED BY:	H.N.	29 APR. 19
APPROVED BY:	MAHMOOD KARIMZADEH, AIA, DEPUTY CITY ENGINEER	29 APR. 19

CITY ENGINEER

VERTICAL CONTROL:
HORIZONTAL CONTROL:

SHEET TITLE: STRUCTURAL COLUMN SCHEDULE

PROJECT: STUDIO CITY GYMNASIUM

ADDRESS: 12621 RYE STREET, STUDIO CITY, CA 91604

ST Enterprises Corp.
554 S San Vicente Blvd., #202, Los Angeles, CA 90048 Tel: (310) 210 - 3238

WORK ORDER NO.
Project Number
PLAN FILE NO.
DRAWING NO.
S13
SHEET 127 OF SHEETS 211

PLOTTED:4/30/2019 5:27:57 PM

Structural Framing Schedule

Mark	Type	WidthXDepth	Length	Reference Level	Elevation at Bottom	Elevation at Top	Reference Level Elevation
	L3-1/2X2X1/4		6' - 3 3/8"	S7.1 - T.O. GYM COL.	29' - 8 5/16"	29' - 11 13/16"	29' - 11 13/16"
	L3-1/2X2X1/4		6' - 3 3/8"	S7.1 - T.O. GYM COL.	29' - 8 5/16"	29' - 11 13/16"	29' - 11 13/16"
	L3-1/2X2X1/4		31' - 5 1/8"	S7.1 - T.O. GYM COL.	29' - 8 5/16"	29' - 11 13/16"	29' - 11 13/16"
	L3-1/2X2X1/4		6' - 3 3/8"	S7.1 - T.O. GYM COL.	29' - 8 5/16"	29' - 11 13/16"	29' - 11 13/16"
	L3-1/2X2X1/4		6' - 3 3/8"	S7.1 - T.O. GYM COL.	29' - 8 5/16"	29' - 11 13/16"	29' - 11 13/16"
	L3-1/2X2X1/4		7' - 10 25/32"	S7.1 - T.O. GYM COL.	29' - 8 5/16"	29' - 11 13/16"	29' - 11 13/16"
	L3-1/2X2X1/4		7' - 10 25/32"	S7.1 - T.O. GYM COL.	29' - 8 5/16"	29' - 11 13/16"	29' - 11 13/16"
	L3-1/2X2X1/4		31' - 11 11/16"	S7.1 - T.O. GYM COL.	29' - 8 5/16"	29' - 11 13/16"	29' - 11 13/16"
	L3-1/2X2X1/4		31' - 11 11/16"	S7.1 - T.O. GYM COL.	29' - 8 5/16"	29' - 11 13/16"	29' - 11 13/16"
M075	HSS6X6X1/2		67' - 11 23/32"	T.O. TOPPING SLAB	Varies	Varies	0' - 0"
M076	HSS6X6X1/2		0' - 11 5/16"	T.O. TOPPING SLAB	Varies	Varies	0' - 0"
M079	HSS6X6X1/2		0' - 11 25/32"	T.O. TOPPING SLAB	Varies	Varies	0' - 0"
M081	HSS6X6X1/2		0' - 11 25/32"	T.O. TOPPING SLAB	Varies	Varies	0' - 0"
M083	HSS6X6X1/2		0' - 11 25/32"	T.O. TOPPING SLAB	Varies	Varies	0' - 0"
M085	HSS6X6X1/2		0' - 11 25/32"	T.O. TOPPING SLAB	Varies	Varies	0' - 0"
M087	HSS6X6X1/2		0' - 11 25/32"	T.O. TOPPING SLAB	Varies	Varies	0' - 0"
M090	W8X35		9' - 6"	T.O. TOPPING SLAB	7' - 3 7/8"	8' - 0"	0' - 0"
M091	W8X35		16' - 6"	T.O. TOPPING SLAB	7' - 3 7/8"	8' - 0"	0' - 0"
M092	W8X35		13' - 6"	T.O. TOPPING SLAB	7' - 3 7/8"	8' - 0"	0' - 0"
M093	W8X35		16' - 6"	T.O. TOPPING SLAB	7' - 3 7/8"	8' - 0"	0' - 0"
M094	W8X35		9' - 6"	T.O. TOPPING SLAB	7' - 3 7/8"	8' - 0"	0' - 0"
M095	W10X30		21' - 5"	S6 - T.O. UTILITY ROOF	9' - 1 1/2"	10' - 0"	10' - 0"
M096 (BRACE)	W10X30		4' - 11"	S6 - T.O. UTILITY ROOF	9' - 1 1/2"	10' - 0"	10' - 0"
M096(SMF)	W10X30		13' - 5 1/2"	S6 - T.O. UTILITY ROOF	9' - 1 1/2"	10' - 0"	10' - 0"
M097	W10X30		12' - 10 19/32"	S6 - T.O. UTILITY ROOF	9' - 1 1/2"	10' - 0"	10' - 0"
M098	W10X30		12' - 10 19/32"	S6 - T.O. UTILITY ROOF	9' - 1 1/2"	10' - 0"	10' - 0"
M099(SMF)	W10X30		17' - 4 17/32"	S6 - T.O. UTILITY ROOF	9' - 1 1/2"	10' - 0"	10' - 0"
M100	W10X30		13' - 1 1/8"	S6 - T.O. UTILITY ROOF	9' - 1 1/2"	10' - 0"	10' - 0"
M101	W10X30		12' - 10 19/32"	S6 - T.O. UTILITY ROOF	9' - 1 1/2"	10' - 0"	10' - 0"
M102	W10X30		12' - 10 19/32"	S6 - T.O. UTILITY ROOF	9' - 1 1/2"	10' - 0"	10' - 0"
M102A (BRACE)	W10X30		13' - 4 13/32"	S6 - T.O. UTILITY ROOF	9' - 1 1/2"	10' - 0"	10' - 0"
M103	W10X30		22' - 0 11/32"	S6 - T.O. UTILITY ROOF	9' - 1 1/2"	10' - 0"	10' - 0"
M104	W10X30		13' - 4 21/32"	S6 - T.O. UTILITY ROOF	9' - 1 1/2"	10' - 0"	10' - 0"
M105	W10X30		12' - 10 19/32"	S6 - T.O. UTILITY ROOF	9' - 1 1/2"	10' - 0"	10' - 0"
M106	W10X30		12' - 10 19/32"	S6 - T.O. UTILITY ROOF	9' - 1 1/2"	10' - 0"	10' - 0"
M107	W10X30		12' - 10 19/32"	S6 - T.O. UTILITY ROOF	9' - 1 1/2"	10' - 0"	10' - 0"
M108	W10X30		12' - 10 19/32"	S6 - T.O. UTILITY ROOF	9' - 1 1/2"	10' - 0"	10' - 0"
M109	W10X30		12' - 10 19/32"	S6 - T.O. UTILITY ROOF	9' - 1 1/2"	10' - 0"	10' - 0"
M110	W10X30		12' - 10 19/32"	S6 - T.O. UTILITY ROOF	9' - 1 1/2"	10' - 0"	10' - 0"
M111 (BRACE)	W10X30		4' - 2 3/32"	S6 - T.O. UTILITY ROOF	9' - 1 1/2"	10' - 0"	10' - 0"
M111(SMF)	W10X30		14' - 0 13/32"	S6 - T.O. UTILITY ROOF	9' - 1 1/2"	10' - 0"	10' - 0"
M112	W10X30		21' - 5"	S6 - T.O. UTILITY ROOF	9' - 1 1/2"	10' - 0"	10' - 0"
M113(SMF)	W10X30		17' - 9 13/32"	S6 - T.O. UTILITY ROOF	9' - 1 1/2"	10' - 0"	10' - 0"
M114	W10X30		22' - 1"	S6 - T.O. UTILITY ROOF	9' - 1 1/2"	10' - 0"	10' - 0"
M115	W8X35		5' - 5 1/4"	T.O. TOPPING SLAB	9' - 3 7/8"	10' - 0"	0' - 0"
M116	W8X35		17' - 6"	T.O. TOPPING SLAB	9' - 3 7/8"	10' - 0"	0' - 0"
M117	W8X35		17' - 0"	T.O. TOPPING SLAB	9' - 3 7/8"	10' - 0"	0' - 0"
M118	W8X35		16' - 6"	T.O. TOPPING SLAB	9' - 3 7/8"	10' - 0"	0' - 0"
M119	W8X35		18' - 0 1/2"	T.O. TOPPING SLAB	9' - 3 7/8"	10' - 0"	0' - 0"
M120	W8X35		15' - 5 1/2"	T.O. TOPPING SLAB	9' - 3 7/8"	10' - 0"	0' - 0"
M121	W8X35		15' - 6 1/2"	T.O. TOPPING SLAB	9' - 3 7/8"	10' - 0"	0' - 0"
M122	W8X35		9' - 6"	T.O. TOPPING SLAB	10' - 3 7/8"	11' - 0"	0' - 0"
M123	W8X35		13' - 6"	S6 - T.O. UTILITY ROOF	10' - 3 7/8"	11' - 0"	10' - 0"
M124	W8X35		5' - 5"	T.O. TOPPING SLAB	11' - 7 7/8"	12' - 4"	0' - 0"
M125	W8X35		17' - 6"	T.O. TOPPING SLAB	11' - 7 7/8"	12' - 4"	0' - 0"
M126	W8X35		17' - 0"	T.O. TOPPING SLAB	11' - 7 7/8"	12' - 4"	0' - 0"
M127	W8X35		16' - 6"	T.O. TOPPING SLAB	11' - 7 7/8"	12' - 4"	0' - 0"
M128	W8X35		18' - 0 1/2"	T.O. TOPPING SLAB	11' - 7 7/8"	12' - 4"	0' - 0"
M129	W8X35		15' - 5 1/2"	T.O. TOPPING SLAB	11' - 7 7/8"	12' - 4"	0' - 0"
M130	W8X35		16' - 6"	T.O. TOPPING SLAB	11' - 7 7/8"	12' - 4"	0' - 0"
M131	W8X35		9' - 6"	S6 - T.O. UTILITY ROOF	10' - 3 7/8"	11' - 0"	10' - 0"
M132	W8X35		16' - 6"	S6 - T.O. UTILITY ROOF	10' - 3 7/8"	11' - 0"	10' - 0"
M133	W8X35		16' - 6"	S6 - T.O. UTILITY ROOF	10' - 3 7/8"	11' - 0"	10' - 0"
M134 (BRACE)	HSS6X6X1/2		15' - 5 13/16"	S6 - T.O. MP ROOF	15' - 3"	15' - 9"	15' - 0"
M134(SMF)	W10X30		16' - 10"	T.O. TOPPING SLAB	15' - 0"	15' - 10 1/2"	0' - 0"
M135	W10X30		17' - 1"	T.O. TOPPING SLAB	15' - 0"	15' - 10 1/2"	0' - 0"
M136	W10X30		1' - 6"	S6 - T.O. MP ROOF	15' - 0"	15' - 10 1/2"	15' - 0"
M137(SMF)	W10X30		15' - 8"	T.O. TOPPING SLAB	15' - 0"	15' - 10 1/2"	0' - 0"
M138	W10X30		3' - 0"	S6 - T.O. MP ROOF	15' - 0"	15' - 10 1/2"	15' - 0"
M139	W10X30		1' - 2 11/32"	S6 - T.O. MP ROOF	15' - 0"	15' - 10 1/2"	15' - 0"
M140(SMF)	W10X30		8' - 7 3/32"	S6 - T.O. MP ROOF	15' - 0"	15' - 10 1/2"	15' - 0"
M140A (BRACE)	W10X30		3' - 5 3/32"	S6 - T.O. MP ROOF	14' - 1 1/2"	15' - 0"	15' - 0"
M140B (BRCE)	W10X30		3' - 5 3/32"	S6 - T.O. MP ROOF	14' - 1 1/2"	15' - 0"	15' - 0"
M141	W10X30		0' - 10 1/8"	S6 - T.O. MP ROOF	15' - 0"	15' - 10 1/2"	15' - 0"
M142(SMF)	W10X30		10' - 3 21/32"	S6 - T.O. MP ROOF	15' - 0"	15' - 10 1/2"	15' - 0"
M142A (BRACE)	W10X30		6' - 4 15/16"	S6 - T.O. MP ROOF	14' - 1 1/2"	15' - 0"	15' - 0"
M142B (BRACE)	W10X30		6' - 4 15/16"	S6 - T.O. MP ROOF	14' - 1 1/2"	15' - 0"	15' - 0"
M143	W10X30		6' - 6 1/16"	S6 - T.O. MP ROOF	15' - 0"	15' - 10 1/2"	15' - 0"
M144(SMF)	W10X30		6' - 4 3/32"	S6 - T.O. MP ROOF	15' - 0"	15' - 10 1/2"	15' - 0"
M144A (BRACE)	W10X30		5' - 1 1/8"	S6 - T.O. MP ROOF	14' - 1 1/2"	15' - 0"	15' - 0"
M145	W10X30		6' - 4 3/32"	S6 - T.O. MP ROOF	15' - 0"	15' - 10 1/2"	15' - 0"
M146(SMF)	W10X30		6' - 4 3/32"	S6 - T.O. MP ROOF	15' - 0"	15' - 10 1/2"	15' - 0"
M146A (BRACE)	W10X30		5' - 1 1/8"	S6 - T.O. MP ROOF	14' - 1 1/2"	15' - 0"	15' - 0"
M146B (BRACE)	W10X30		5' - 1 1/8"	S6 - T.O. MP ROOF	14' - 1 1/2"	15' - 0"	15' - 0"
M147	W10X30		9' - 0 13/16"	S6 - T.O. MP ROOF	15' - 0"	15' - 10 1/2"	15' - 0"
M148	W10X45		12' - 11 3/8"	S6 - T.O. MP ROOF	15' - 0"	15' - 10 3/32"	15' - 0"
M149	W10X77		30' - 6 11/16"	T.O. TOPPING SLAB	15' - 0"	15' - 10 19/32"	0' - 0"

Structural Framing Schedule

Mark	Type	WidthXDepth	Length	Reference Level	Elevation at Bottom	Elevation at Top	Reference Level Elevation
M150	W10X112		21' - 4 13/32"	S6 - T.O. MP ROOF	15' - 0"	15' - 11 13/32"	15' - 0"
M151	W10X30		36' - 8 5/8"	S6 - T.O. MP ROOF	15' - 0"	15' - 10 1/2"	15' - 0"
M152	W10X30		11' - 5"	T.O. TOPPING SLAB	15' - 0"	15' - 10 1/2"	0' - 0"
M153	W10X45		51' - 6 19/32"	T.O. TOPPING SLAB	15' - 0"	15' - 10 3/32"	0' - 0"
M154	W10X45		11' - 6 3/8"	T.O. TOPPING SLAB	15' - 0"	15' - 10 3/32"	0' - 0"
M155(SMF)	W10X30		6' - 5"	T.O. TOPPING SLAB	14' - 1 1/2"	15' - 0"	0' - 0"
M156	W10X77		24' - 7 31/32"	T.O. TOPPING SLAB	15' - 0"	15' - 10 19/32"	0' - 0"
M157	W10X30		16' - 0 7/32"	T.O. TOPPING SLAB	14' - 1 1/2"	15' - 0"	0' - 0"
M158(SMF)	W10X30		7' - 0 13/16"	T.O. TOPPING SLAB	14' - 1 1/2"	15' - 0"	0' - 0"
M159	W10X88		11' - 8 1/16"	T.O. TOPPING SLAB	15' - 0"	15' - 10 13/16"	0' - 0"
M160	W10X88		29' - 9 7/8"	T.O. TOPPING SLAB	15' - 0"	15' - 10 13/16"	0' - 0"
M161	W10X112		31' - 7 31/32"	S6 - T.O. MP ROOF	15' - 0"	15' - 11 13/32"	15' - 0"
M162	W10X45		8' - 3 13/32"	T.O. TOPPING SLAB	15' - 0"	15' - 10 3/32"	0' - 0"
M163	W10X30		10' - 10"	S6 - T.O. MP ROOF	14' - 1 1/2"	15' - 0"	15' - 0"
M164	W10X30		11' - 1 5/8"	S6 - T.O. MP ROOF	14' - 1 1/2"	15' - 0"	15' - 0"
M165	W10X30		8' - 9 1/32"	T.O. TOPPING SLAB	14' - 1 1/2"	15' - 0"	0' - 0"
M166	W10X30		2' - 8 31/32"	T.O. TOPPING SLAB	15' - 0"	15' - 10 1/2"	0' - 0"
M167	W10X112		19' - 10 3/32"	S6 - T.O. MP ROOF	15' - 0"	15' - 11 13/32"	15' - 0"
M168	W10X30		17' - 2 1/32"	T.O. TOPPING SLAB	14' - 1 1/2"	15' - 0"	0' - 0"
M169	W10X30		13' - 0 31/32"	S6 - T.O. MP ROOF	15' - 0"	15' - 10 1/2"	15' - 0"
M170	W10X30		4' - 2 15/16"	T.O. TOPPING SLAB	14' - 1 1/2"	15' - 0"	0' - 0"
M171	W10X45		3' - 0 27/32"	T.O. TOPPING SLAB	15' - 0"	15' - 10 3/32"	0' - 0"
M172	W10X30		7' - 7 31/32"	S6 - T.O. MP ROOF	14' - 1 1/2"	15' - 0"	15' - 0"
M172A(SMF)	W10X30		9' - 2 3/8"	T.O. TOPPING SLAB	14' - 1 1/2"	15' - 0"	0' - 0"
M173	W10X45		17' - 8 1/4"	T.O. TOPPING SLAB	14' - 1 29/32"	15' - 0"	0' - 0"
M174	W10X68		20' - 5 1/32"	T.O. TOPPING SLAB	14' - 1 19/32"	15' - 0"	0' - 0"
M175 (BRACE)	W10X30		5' - 10 3/4"	T.O. TOPPING SLAB	14' - 1 1/2"	15' - 0"	0' - 0"
M175(SMF)	W10X30		12' - 10 27/32"	T.O. TOPPING SLAB	14' - 1 1/2"	15' - 0"	0' - 0"
M176	W10X68		20' - 5"	T.O. TOPPING SLAB	14' - 1 19/32"	15' - 0"	0' - 0"
M177	W10X30		2' - 8 31/32"	S6 - T.O. MP ROOF	15' - 0"	15' - 10 1/2"	15' - 0"
M177A (BRACE)	W10X30		5' - 10 3/4"	T.O. TOPPING SLAB	14' - 1 1/2"	15' - 0"	0' - 0"
M178	W10X112		6' - 1 1/2"	S6 - T.O. MP ROOF	14' - 0 19/32"	15' - 0"	15' - 0"
M179	W10X45		5' - 8 11/16"	T.O. TOPPING SLAB	15' - 0"	15' - 10 3/32"	0' - 0"
M180	W12X45		17' - 2"	T.O. TOPPING SLAB	13' - 11 29/32"	15' - 0"	0' - 0"
M181	W12X45		17' - 7 15/16"	T.O. TOPPING SLAB	13' - 11 29/32"	15' - 0"	0' - 0"
M182	W12X45		17' - 1 27/32"	T.O. TOPPING SLAB	13' - 11 29/32"	15' - 0"	0' - 0"
M183	W10X30		2' - 9 7/32"	S6 - T.O. MP ROOF	15' - 0"	15' - 10 1/2"	15' - 0"
M184(SMF)	W10X30		13' - 11 11/16"	S6 - T.O. MP ROOF	14' - 1 1/2"	15' - 0"	15' - 0"
M184A (BRACE)	W10X30		2' - 9"	T.O. TOPPING SLAB	15' - 0"	15' - 10 1/2"	0' - 0"
M185	W10X68		8' - 10 21/32"	T.O. TOPPING SLAB	15' - 0"	15' - 10 13/32"	0' - 0"
M186(SMF)	W10X30		16' - 11 1/2"	T.O. TOPPING SLAB	15' - 0"	15' - 10 1/2"	0' - 0"
M186A (BRACE)	W10X68		10' - 2"	T.O. TOPPING SLAB	15' - 0"	15' - 10 13/32"	0' - 0"
M187 (BRACE	W10X30		4' - 4 5/8"	T.O. TOPPING SLAB	15' - 0"	15' - 10 1/2"	0' - 0"
M187(SMF)	W10X30		13' - 8 1/16"	T.O. TOPPING SLAB	14' - 1 1/2"	15' - 0"	0' - 0"
M187A	W10X30		14' - 2 31/32"	T.O. TOPPING SLAB	14' - 1 1/2"	15' - 0"	0' - 0"
M188	W10X30		17' - 8 1/4"	T.O. TOPPING SLAB	15' - 0"	15' - 10 1/2"	0' - 0"
M189	W12X79		28' - 0 1/4"	T.O. TOPPING SLAB	13' - 11 19/32"	15' - 0"	0' - 0"
M190(SMF)	W10X30		17' - 0 1/8"	S6 - T.O. MP ROOF	15' - 0"	15' - 10 1/2"	15' - 0"
M190A (BRACE)	W10X68		10' - 2"	T.O. TOPPING SLAB	15' - 0"	15' - 10 13/32"	0' - 0"
M191	W12X79		28' - 0"	T.O. TOPPING SLAB	13' - 11 19/32"	15' - 0"	0' - 0"
M192	W10X30		2' - 10 5/8"	T.O. TOPPING SLAB	15' - 0"	15' - 10 1/2"	0' - 0"
M193	W10X30		13' - 11 29/32"	S6 - T.O. MP ROOF	14' - 1 1/2"	15' - 0"	15' - 0"
M194	W10X45		82' - 3 1/2"	S6 - T.O. MP ROOF	15' - 0"	15' - 10 3/32"	15' - 0"
M195	W10X45		65' - 7"	T.O. TOPPING SLAB	15' - 0"	15' - 10 3/32"	0' - 0"
M196	W10X68		10' - 2"	T.O. TOPPING SLAB	15' - 0"	15' - 10 13/32"	0' - 0"
M197	W10X68		10' - 1 17/32"	T.O. TOPPING SLAB	15' - 0"	15' - 10 13/32"	0' - 0"
M198	W10X68		10' - 2"	T.O. TOPPING SLAB	15' - 0"	15' - 10 13/32"	0' - 0"
M199	W10X77		10' - 1 29/32"	S6 - T.O. MP ROOF	15' - 0"	15' - 10 19/32"	15' - 0"
M199A	W10X54		101' - 9"	S6 - T.O. MP ROOF	15' - 0"	15' - 10 3/32"	15' - 0"
M200	W8X35		9' - 6"	T.O. TOPPING SLAB	15' - 3 7/8"	16' - 0"	0' - 0"
M201	W8X35		16' - 6"	T.O. TOPPING SLAB	15' - 3 7/8"	16' - 0"	0' - 0"
M202	W8X35		13' - 6"	T.O. TOPPING SLAB	15' - 3 7/8"	16' - 0"	0' - 0"
M203	W8X35		16' - 6"	T.O. TOPPING SLAB	15' - 3 7/8"	16' - 0"	0' - 0"
M204	W8X35		9' - 6"	T.O. TOPPING SLAB	15' - 3 7/8"	16' - 0"	0' - 0"
M205	W8X35		5' - 5 1/4"	T.O. TOPPING SLAB	13' - 6 7/8"	14' - 3"	0' - 0"
M206	W8X35		17' - 6"	T.O. TOPPING SLAB	13' - 6 7/8"	14' - 3"	0' - 0"
M207	W8X35		17' - 0"	T.O. TOPPING SLAB	13' - 6 7/8"	14' - 3"	0' - 0"
M208	W8X35		16' - 6"	T.O. TOPPING SLAB	13' - 6 7/8"	14' - 3"	0' - 0"
M209	W8X35		18' - 0 1/2"	T.O. TOPPING SLAB	13' - 6 7/8"	14' - 3"	0' - 0"
M210	W8X35		15' - 5 1/2"	T.O. TOPPING SLAB	13' - 6 7/8"	14' - 3"	0' - 0"
M211	W8X35		16' - 6"	T.O. TOPPING SLAB	13' - 6 7/8"	14' - 3"	0' - 0"
M212	W8X35		9' - 6"	S6 - T.O. MP ROOF	13' - 6 7/8"	14' - 3"	15' - 0"
M212A	W8X35		16' - 6"	S6 - T.O. MP ROOF	13' - 6 7/8"	14' - 3"	15' - 0"
M213	W8X35		13' - 6"	S6 - T.O. MP ROOF	13' - 6 7/8"	14' - 3"	15' - 0"
M213A	W8X35		16' - 6"	S6 - T.O. MP ROOF	13' - 6 7/8"	14' - 3"	15' - 0"
M214	W8X35		5' - 4 15/32"	T.O. TOPPING SLAB	15' - 3 7/8"	16' - 0"	0' - 0"
M215	W8X35		17' - 6"	T.O. TOPPING SLAB	15' - 3 7/8"	16' - 0"	0' - 0"
M216	W8X35		17' - 0"	T.O. TOPPING SLAB	15' - 3 7/8"	16' - 0"	0' - 0"
M217	W8X35		15' - 6 1/2"	T.O. TOPPING SLAB	15' - 3 7/8"	16' - 0"	0' - 0"
M218	W8X35		18' - 0 1/2"	T.O. TOPPING SLAB	15' - 3 7/8"	16' - 0"	0' - 0"
M219	W8X35		15' - 5 1/2"	T.O. TOPPING SLAB	15' - 3 7/8"	16' - 0"	0' - 0"
M220	W8X35		16' - 6"	T.O. TOPPING SLAB	15' - 3 7/8"	16' - 0"	0' - 0"
M221	W8X35		9' - 6"	S6 - T.O. MP ROOF	13' - 6 7/8"	14' - 3"	15' - 0"
M222	W12X96		7' - 7"	S7.1 - T.O. GYM COL.	28' - 11 3/32"	29' - 11 13/16"	29' - 11 13/16"
M223	W12X96		4' - 5 1/32"	S7.1 - T.O. GYM COL.	28' - 11 3/32"	29' - 11 13/16"	29' - 11 13/16"
M224(SMF)	W12X96		15' - 7"	S7.1 - T.O. GYM COL.	28' - 11 3/32"	29' - 11 13/16"	29' - 11 13/16"
M225(SMF)	W12X96		15' - 1"	S7.1 - T.O. GYM COL.	28' - 11 3/32"	29' - 11 13/16"	29' - 11 13/16"
M226(SMF)	W12X96		14' - 7"	S7.1 - T.O. GYM COL.	28' - 11 3/32"	29' - 11 13/16"	29' - 11 13/16"
M227(SMF)	W12X96		16' - 1"	S7.1 - T.O. GYM COL.	28' - 11 3/32"	29' - 11 13/16"	29' - 11 13/16"
M228(SMF)	W12X96		13' - 7"	S7.1 - T.O. GYM COL.	28' - 11 3/32"	29' - 11 13/16"	29' - 11 13/16"
M229(SMF)	W12X96		15' - 6 1/32"	S7.1 - T.O. GYM COL.	28' - 11 3/32"	29' - 11 13/16"	29' - 11 13/16"

THE CITY OF LOS ANGELES OR ITS OFFICERS OR AGENTS SHALL NOT BE RESPONSIBLE FOR THE ACCURACY OR COMPLETENESS OF ELECTRONIC COPIES OF THIS PLAN SHEET.

REVISION DATES (DESIGN STAGE ONLY)

TTLB TEMPLATE REVISION DATE: 02/2013
SHEET ISSUE DATE: 26.APR.19
FILE PATH: BIM 360://Studio City Recreation Center/SCRC-Structural.rvt

BUREAU OF ENGINEERING
OFFICIAL RECORD

BUREAU OF ENGINEERING
ENGINEERING
CITY OF LOS ANGELES

NO.	REVISION DESCRIPTION	DATE	BY

BUILDING NO. -
INDEX NO. RP-300106

REGISTERED PROFESSIONAL ENGINEER
HOWARD WAYNE NAFARIN
NO. C-62199
EXP. 09-30-19
CIVIL
STATE OF CALIFORNIA

DEPARTMENT OF PUBLIC WORKS
CITY OF LOS ANGELES

TED ALLEN, PE
CITY ENGINEER
DATE: 29 APR. 19

ARCHITECTURAL DIVISION
ENGINEER: NAST ENTERPRISES CORP. LIC. NO.: C-62199
DESIGNED BY: H.N. 29 APR. 19
DRAWN BY: H.N. 29 APR. 19
CHECKED BY: H.N. 29 APR. 19
APPROVED BY: MAHMOOD KARIMZADEH, AIA. DEPUTY CITY ENGINEER 29 APR. 19

CITY OF LOS ANGELES
ST Enterprises Corp.
554 S San Vicente Blvd. #202, Los Angeles, CA 90048 Tel: (310) 210 - 3238

VERTICAL CONTROL:
HORIZONTAL CONTROL:

SHEET TITLE: STRUCTURAL BEAM SCHEDULE

PROJECT: STUDIO CITY GYMNASIUM

ADDRESS: 12621 RYE STREET, STUDIO CITY, CA 91604

WORK ORDER NO. Project Number
PLAN FILE NO.
DRAWING NO. S14
SHEET 128 OF SHEETS 211

PLOTTED:4/30/2019 5:27:58 PM

Structural Framing Schedule 2

Mark	Type	WidthXDepth	Length	Reference Level	Elevation at Bottom	Elevation at Top	Reference Level Elevation
M230	W12X96		7' - 7"	S7.1 - T.O. GYM COL.	28' - 11 3/32"	29' - 11 13/16"	29' - 11 13/16"
M231(SMF)	W12X96		14' - 7"	S7.1 - T.O. GYM COL.	28' - 11 3/32"	29' - 11 13/16"	29' - 11 13/16"
M232(SMF)	W12X96		14' - 7"	S7.1 - T.O. GYM COL.	28' - 11 3/32"	29' - 11 13/16"	29' - 11 13/16"
M233(SMF)	W12X96		11' - 7"	S7.1 - T.O. GYM COL.	28' - 11 3/32"	29' - 11 13/16"	29' - 11 13/16"
M234(SMF)	W12X96		11' - 7"	S7.1 - T.O. GYM COL.	28' - 11 3/32"	29' - 11 13/16"	29' - 11 13/16"
M235(SMF)	W12X96		15' - 6 1/2"	S7.1 - T.O. GYM COL.	28' - 11 3/32"	29' - 11 13/16"	29' - 11 13/16"
M236(SMF)	W12X96		14' - 7"	S7.1 - T.O. GYM COL.	28' - 11 3/32"	29' - 11 13/16"	29' - 11 13/16"
M237	W12X96		7' - 7"	S7.1 - T.O. GYM COL.	28' - 11 3/32"	29' - 11 13/16"	29' - 11 13/16"
M238(SMF)	W12X96		7' - 7"	S7.1 - T.O. GYM COL.	28' - 11 3/32"	29' - 11 13/16"	29' - 11 13/16"
M239	W12X96		4' - 5 1/32"	S7.1 - T.O. GYM COL.	28' - 11 3/32"	29' - 11 13/16"	29' - 11 13/16"
M240(SMF)	W12X96		15' - 7"	S7.1 - T.O. GYM COL.	28' - 11 3/32"	29' - 11 13/16"	29' - 11 13/16"
M241(SMF)	W12X96		15' - 1"	S7.1 - T.O. GYM COL.	28' - 11 3/32"	29' - 11 13/16"	29' - 11 13/16"
M242(SMF)	W12X96		14' - 7"	S7.1 - T.O. GYM COL.	28' - 11 3/32"	29' - 11 13/16"	29' - 11 13/16"
M243(SMF)	W12X96		16' - 1"	S7.1 - T.O. GYM COL.	28' - 11 3/32"	29' - 11 13/16"	29' - 11 13/16"
M244	W12X96		13' - 7"	S7.1 - T.O. GYM COL.	28' - 11 3/32"	29' - 11 13/16"	29' - 11 13/16"
M245	W12X96		15' - 6 1/32"	S7.1 - T.O. GYM COL.	28' - 11 3/32"	29' - 11 13/16"	29' - 11 13/16"
M246	W27X539		65' - 6"	S7 - T.O. GYM ROOF	26' - 3 1/2"	29' - 0"	29' - 0"
M247	W27X539		65' - 6"	S7 - T.O. GYM ROOF	26' - 3 1/2"	29' - 0"	29' - 0"
M248	W27X539		65' - 5 17/32"	S7 - T.O. GYM ROOF	26' - 3 1/2"	29' - 0"	29' - 0"
M249	W27X539		65' - 6"	S7 - T.O. GYM ROOF	26' - 3 1/2"	29' - 0"	29' - 0"
M250	W27X539		65' - 6"	S7 - T.O. GYM ROOF	26' - 3 1/2"	29' - 0"	29' - 0"
M251	W27X539		65' - 6"	S7 - T.O. GYM ROOF	26' - 3 1/2"	29' - 0"	29' - 0"
M251A	HSS8X4X5/16		101' - 0"	S7 - T.O. GYM ROOF	29' - 0"	29' - 8"	29' - 0"
M252	W12X58		106' - 4 3/32"	S7 - T.O. GYM ROOF	27' - 11 13/16"	29' - 0"	29' - 0"
M253	W12X58		106' - 5 1/4"	S7 - T.O. GYM ROOF	27' - 11 13/16"	29' - 0"	29' - 0"
M254	W12X58		100' - 3 29/32"	S7 - T.O. GYM ROOF	27' - 11 13/16"	29' - 0"	29' - 0"
M254	W12X58		4' - 8 29/32"	S7 - T.O. GYM ROOF	27' - 11 13/16"	29' - 0"	29' - 0"
M255	W12X58		106' - 5"	S7 - T.O. GYM ROOF	27' - 11 13/16"	29' - 0"	29' - 0"
M256	HSS8X4X5/16		101' - 0"	S7 - T.O. GYM ROOF	29' - 0"	29' - 8"	29' - 0"
M256A	HSS8X4X5/16		101' - 0"	S7 - T.O. GYM ROOF	29' - 0"	29' - 8"	29' - 0"
M257	HSS8X4X5/16		101' - 0"	S7 - T.O. GYM ROOF	29' - 0"	29' - 8"	29' - 0"
M258	HSS8X4X5/16		101' - 0"	S7 - T.O. GYM ROOF	29' - 0"	29' - 8"	29' - 0"
M259	HSS8X4X5/16		101' - 0"	S7 - T.O. GYM ROOF	29' - 0"	29' - 8"	29' - 0"
M259A	HSS8X4X5/16		101' - 0"	S7 - T.O. GYM ROOF	29' - 0"	29' - 8"	29' - 0"
M260	HSS8.625X.625		132' - 11 11/16"	S7 - T.O. GYM ROOF	19' - 11 11/16"	20' - 8 5/16"	29' - 0"
M277	HSS8.625X.625		105' - 9"	S7.1 - T.O. GYM COL.	29' - 6 7/16"	30' - 3 1/16"	29' - 11 13/16"
M278	HSS8.625X.625		133' - 0"	S7.1 - T.O. GYM COL.	29' - 6 7/16"	30' - 3 1/16"	29' - 11 13/16"
M279	HSS8.625X.625		105' - 9"	S7.1 - T.O. GYM COL.	29' - 6 7/16"	30' - 3 1/16"	29' - 11 13/16"
M280	HSS12X4X3/8		7' - 5 7/8"	S7.1 - T.O. GYM COL.	29' - 11 13/16"	30' - 11 13/16"	29' - 11 13/16"
M280	HSS12X4X3/8 Tapered		3' - 6"	S7.1 - T.O. GYM COL.	29' - 11 13/16"	30' - 11 13/16"	29' - 11 13/16"
M281	HSS12X4X5/8		23' - 3 1/2"	S7.1 - T.O. GYM COL.	29' - 11 13/16"	30' - 11 13/16"	29' - 11 13/16"
M281	HSS12X4X3/8 Tapered		3' - 6"	S7.1 - T.O. GYM COL.	29' - 11 13/16"	30' - 11 13/16"	29' - 11 13/16"
M282	HSS12X4X3/8 Tapered		3' - 6"	S7.1 - T.O. GYM COL.	29' - 11 13/16"	30' - 11 13/16"	29' - 11 13/16"
M282	HSS12X4X3/8		7' - 11 3/32"	S7.1 - T.O. GYM COL.	29' - 11 13/16"	30' - 11 13/16"	29' - 11 13/16"
M283	HSS12X4X3/8 Tapered		3' - 6"	S7.1 - T.O. GYM COL.	29' - 11 13/16"	30' - 11 13/16"	29' - 11 13/16"
M283	HSS12X4X3/8		7' - 11 3/32"	S7.1 - T.O. GYM COL.	29' - 11 13/16"	30' - 11 13/16"	29' - 11 13/16"
M284	HSS12X4X3/8 Tapered		3' - 6"	S7.1 - T.O. GYM COL.	29' - 11 13/16"	30' - 11 13/16"	29' - 11 13/16"
M284	HSS12X4X3/8		7' - 11 3/32"	S7.1 - T.O. GYM COL.	29' - 11 13/16"	30' - 11 13/16"	29' - 11 13/16"
M285	HSS12X4X3/8 Tapered		3' - 6"	S7.1 - T.O. GYM COL.	29' - 11 13/16"	30' - 11 13/16"	29' - 11 13/16"
M285	HSS12X4X3/8		7' - 11 3/32"	S7.1 - T.O. GYM COL.	29' - 11 13/16"	30' - 11 13/16"	29' - 11 13/16"
M286	HSS12X4X3/8 Tapered		3' - 6"	S7.1 - T.O. GYM COL.	29' - 11 13/16"	30' - 11 13/16"	29' - 11 13/16"
M286	HSS12X4X3/8		7' - 11 3/32"	S7.1 - T.O. GYM COL.	29' - 11 13/16"	30' - 11 13/16"	29' - 11 13/16"
M287	HSS12X4X3/8 Tapered		3' - 6"	S7.1 - T.O. GYM COL.	29' - 11 13/16"	30' - 11 13/16"	29' - 11 13/16"
M287	HSS12X4X3/8		7' - 11 3/32"	S7.1 - T.O. GYM COL.	29' - 11 13/16"	30' - 11 13/16"	29' - 11 13/16"
M288	HSS12X4X3/8		7' - 11 3/32"	S7.1 - T.O. GYM COL.	29' - 11 13/16"	30' - 11 13/16"	29' - 11 13/16"
M288	HSS12X4X3/8 Tapered		3' - 6"	S7.1 - T.O. GYM COL.	29' - 11 13/16"	30' - 11 13/16"	29' - 11 13/16"
M289	HSS12X4X3/8		7' - 11 3/32"	S7.1 - T.O. GYM COL.	29' - 11 13/16"	30' - 11 13/16"	29' - 11 13/16"
M289	HSS12X4X3/8 Tapered		3' - 6"	S7.1 - T.O. GYM COL.	29' - 11 13/16"	30' - 11 13/16"	29' - 11 13/16"
M290	HSS12X4X3/8 Tapered		3' - 6"	S7.1 - T.O. GYM COL.	29' - 11 13/16"	30' - 11 13/16"	29' - 11 13/16"
M290	HSS12X4X3/8		7' - 11 3/32"	S7.1 - T.O. GYM COL.	29' - 11 13/16"	30' - 11 13/16"	29' - 11 13/16"
M291	HSS12X4X3/8 Tapered		3' - 6"	S7.1 - T.O. GYM COL.	29' - 11 13/16"	30' - 11 13/16"	29' - 11 13/16"
M291	HSS12X4X3/8		7' - 11 3/32"	S7.1 - T.O. GYM COL.	29' - 11 13/16"	30' - 11 13/16"	29' - 11 13/16"
M292	HSS12X4X3/8 Tapered		3' - 6"	S7.1 - T.O. GYM COL.	29' - 11 13/16"	30' - 11 13/16"	29' - 11 13/16"
M292	HSS12X4X3/8		7' - 11 3/32"	S7.1 - T.O. GYM COL.	29' - 11 13/16"	30' - 11 13/16"	29' - 11 13/16"
M294	HSS12X4X5/8		22' - 10"	S7.1 - T.O. GYM COL.	29' - 11 13/16"	30' - 11 13/16"	29' - 11 13/16"
M294	HSS12X4X3/8 Tapered		3' - 6"	S7.1 - T.O. GYM COL.	29' - 11 13/16"	30' - 11 13/16"	29' - 11 13/16"
M295	HSS12X4X3/8 Tapered		3' - 6"	S7.1 - T.O. GYM COL.	29' - 11 13/16"	30' - 11 13/16"	29' - 11 13/16"
M295	HSS12X4X3/8		9' - 1 15/16"	S7.1 - T.O. GYM COL.	29' - 11 13/16"	30' - 11 13/16"	29' - 11 13/16"
M296	HSS12X4X3/8 Tapered		3' - 6"	S7.1 - T.O. GYM COL.	29' - 11 13/16"	30' - 11 13/16"	29' - 11 13/16"
M296	HSS12X4X3/8		9' - 10 3/32"	S7.1 - T.O. GYM COL.	29' - 11 13/16"	30' - 11 13/16"	29' - 11 13/16"
M297	HSS12X4X5/8		22' - 10"	S7.1 - T.O. GYM COL.	29' - 11 13/16"	30' - 11 13/16"	29' - 11 13/16"
M297	HSS12X4X3/8 Tapered		3' - 6"	S7.1 - T.O. GYM COL.	29' - 11 13/16"	30' - 11 13/16"	29' - 11 13/16"
M298	HSS12X4X5/8		22' - 10"	S7.1 - T.O. GYM COL.	29' - 11 13/16"	30' - 11 13/16"	29' - 11 13/16"
M298	HSS12X4X3/8 Tapered		3' - 6"	S7.1 - T.O. GYM COL.	29' - 11 13/16"	30' - 11 13/16"	29' - 11 13/16"
M299	HSS12X4X3/8 Tapered		3' - 6"	S7.1 - T.O. GYM COL.	29' - 11 13/16"	30' - 11 13/16"	29' - 11 13/16"
M299	HSS12X4X3/8		9' - 10 3/32"	S7.1 - T.O. GYM COL.	29' - 11 13/16"	30' - 11 13/16"	29' - 11 13/16"
M300	HSS12X4X3/8 Tapered		3' - 6"	S7.1 - T.O. GYM COL.	29' - 11 13/16"	30' - 11 13/16"	29' - 11 13/16"
M300	HSS12X4X3/8		9' - 10 3/32"	S7.1 - T.O. GYM COL.	29' - 11 13/16"	30' - 11 13/16"	29' - 11 13/16"
M301	HSS12X4X5/8		22' - 10"	S7.1 - T.O. GYM COL.	29' - 11 13/16"	30' - 11 13/16"	29' - 11 13/16"
M301	HSS12X4X3/8 Tapered		3' - 6"	S7.1 - T.O. GYM COL.	29' - 11 13/16"	30' - 11 13/16"	29' - 11 13/16"
M302	HSS12X4X5/8		22' - 10"	S7.1 - T.O. GYM COL.	29' - 11 13/16"	30' - 11 13/16"	29' - 11 13/16"
M302	HSS12X4X3/8 Tapered		3' - 6"	S7.1 - T.O. GYM COL.	29' - 11 13/16"	30' - 11 13/16"	29' - 11 13/16"
M303	HSS12X4X3/8 Tapered		3' - 6"	S7.1 - T.O. GYM COL.	29' - 11 13/16"	30' - 11 13/16"	29' - 11 13/16"
M303	HSS12X4X3/8		9' - 10 3/32"	S7.1 - T.O. GYM COL.	29' - 11 13/16"	30' - 11 13/16"	29' - 11 13/16"
M304	HSS12X4X5/8		22' - 10"	S7.1 - T.O. GYM COL.	29' - 11 13/16"	30' - 11 13/16"	29' - 11 13/16"
M304	HSS12X4X3/8 Tapered		3' - 6"	S7.1 - T.O. GYM COL.	29' - 11 13/16"	30' - 11 13/16"	29' - 11 13/16"
M305	HSS12X4X3/8 Tapered		3' - 6"	S7.1 - T.O. GYM COL.	29' - 11 13/16"	30' - 11 13/16"	29' - 11 13/16"
M305	HSS12X4X3/8		9' - 10 3/32"	S7.1 - T.O. GYM COL.	29' - 11 13/16"	30' - 11 13/16"	29' - 11 13/16"

Structural Framing Schedule 2

Mark	Type	WidthXDepth	Length	Reference Level	Elevation at Bottom	Elevation at Top	Reference Level Elevation
M306	HSS12X4X5/8		22' - 10"	S7.1 - T.O. GYM COL.	29' - 11 13/16"	30' - 11 13/16"	29' - 11 13/16"
M306	HSS12X4X3/8 Tapered		3' - 6"	S7.1 - T.O. GYM COL.	29' - 11 13/16"	30' - 11 13/16"	29' - 11 13/16"
M307	HSS12X4X3/8 Tapered		3' - 6"	S7.1 - T.O. GYM COL.	29' - 11 13/16"	30' - 11 13/16"	29' - 11 13/16"
M307	HSS12X4X3/8		9' - 10 3/32"	S7.1 - T.O. GYM COL.	29' - 11 13/16"	30' - 11 13/16"	29' - 11 13/16"
M308	HSS12X4X5/8		31' - 5 1/8"	S7.1 - T.O. GYM COL.	29' - 11 13/16"	30' - 11 13/16"	29' - 11 13/16"
M308	HSS12X4X3/8 Tapered		3' - 6 3/4"	S7.1 - T.O. GYM COL.	29' - 11 13/16"	30' - 11 13/16"	29' - 11 13/16"
M309	HSS12X4X5/8		33' - 4 3/32"	S7.1 - T.O. GYM COL.	29' - 11 13/16"	30' - 11 13/16"	29' - 11 13/16"
M309	HSS12X4X3/8 Tapered		3' - 6 3/4"	S7.1 - T.O. GYM COL.	29' - 11 13/16"	30' - 11 13/16"	29' - 11 13/16"
M310	HSS12X4X5/8		16' - 8 11/16"	S7.1 - T.O. GYM COL.	29' - 11 13/16"	30' - 11 13/16"	29' - 11 13/16"
M310	HSS12X4X3/8 Tapered		3' - 6"	S7.1 - T.O. GYM COL.	29' - 11 13/16"	30' - 11 13/16"	29' - 11 13/16"
M311	HSS12X4X3/8		33' - 4 3/32"	S7.1 - T.O. GYM COL.	29' - 11 13/16"	30' - 11 13/16"	29' - 11 13/16"
M311	HSS12X4X3/8 Tapered		3' - 6 3/4"	S7.1 - T.O. GYM COL.	29' - 11 13/16"	30' - 11 13/16"	29' - 11 13/16"
M312	HSS12X4X3/8		33' - 4 3/32"	S7.1 - T.O. GYM COL.	29' - 11 13/16"	30' - 11 13/16"	29' - 11 13/16"
M312	HSS12X4X3/8 Tapered		3' - 6 3/4"	S7.1 - T.O. GYM COL.	29' - 11 13/16"	30' - 11 13/16"	29' - 11 13/16"
M313	HSS12X4X3/8		33' - 4 3/32"	S7.1 - T.O. GYM COL.	29' - 11 13/16"	30' - 11 13/16"	29' - 11 13/16"
M313	HSS12X4X3/8 Tapered		3' - 6 3/4"	S7.1 - T.O. GYM COL.	29' - 11 13/16"	30' - 11 13/16"	29' - 11 13/16"
M314	HSS12X4X3/8		33' - 4 3/32"	S7.1 - T.O. GYM COL.	29' - 11 13/16"	30' - 11 13/16"	29' - 11 13/16"
M314	HSS12X4X3/8 Tapered		3' - 6 3/4"	S7.1 - T.O. GYM COL.	29' - 11 13/16"	30' - 11 13/16"	29' - 11 13/16"
M315	HSS12X4X3/8		33' - 4 3/32"	S7.1 - T.O. GYM COL.	29' - 11 13/16"	30' - 11 13/16"	29' - 11 13/16"
M315	HSS12X4X3/8 Tapered		3' - 6 3/4"	S7.1 - T.O. GYM COL.	29' - 11 13/16"	30' - 11 13/16"	29' - 11 13/16"
M316	W8X67		32' - 10 29/32"	S7 - T.O. GYM ROOF	29' - 0"	29' - 9"	29' - 0"
M318	W8X35		20' - 4"	S7 - T.O. GYM ROOF	29' - 0 7/8"	29' - 9"	29' - 0"
M319	W8X67		33' - 5"	S7 - T.O. GYM ROOF	29' - 0"	29' - 9"	29' - 0"
M320	HSS12X4X3/8		33' - 4 3/32"	S7.1 - T.O. GYM COL.	29' - 11 13/16"	30' - 11 13/16"	29' - 11 13/16"
M320	HSS12X4X3/8 Tapered		3' - 6 3/4"	S7.1 - T.O. GYM COL.	29' - 11 13/16"	30' - 11 13/16"	29' - 11 13/16"
M321	HSS12X4X3/8		33' - 4 3/32"	S7.1 - T.O. GYM COL.	29' - 11 13/16"	30' - 11 13/16"	29' - 11 13/16"
M321	HSS12X4X3/8 Tapered		3' - 6 3/4"	S7.1 - T.O. GYM COL.	29' - 11 13/16"	30' - 11 13/16"	29' - 11 13/16"
M322	HSS12X4X3/8		33' - 4 3/32"	S7.1 - T.O. GYM COL.	29' - 11 13/16"	30' - 11 13/16"	29' - 11 13/16"
M322	HSS12X4X3/8 Tapered		3' - 6 3/4"	S7.1 - T.O. GYM COL.	29' - 11 13/16"	30' - 11 13/16"	29' - 11 13/16"
M323	HSS12X4X3/8		33' - 4 3/32"	S7.1 - T.O. GYM COL.	29' - 11 13/16"	30' - 11 13/16"	29' - 11 13/16"
M323	HSS12X4X3/8 Tapered		3' - 6 3/4"	S7.1 - T.O. GYM COL.	29' - 11 13/16"	30' - 11 13/16"	29' - 11 13/16"
M324	HSS12X4X3/8 Tapered		3' - 6"	S7.1 - T.O. GYM COL.	29' - 11 13/16"	30' - 11 13/16"	29' - 11 13/16"
M324	HSS12X4X3/8		8' - 9 11/16"	S7.1 - T.O. GYM COL.	29' - 11 13/16"	30' - 11 13/16"	29' - 11 13/16"
M326	HSS12X4X3/8 Tapered		3' - 6"	S7.1 - T.O. GYM COL.	29' - 11 13/16"	30' - 11 13/16"	29' - 11 13/16"
M326	HSS12X4X1/2		6' - 8"	S7.1 - T.O. GYM COL.	29' - 11 13/16"	30' - 11 13/16"	29' - 11 13/16"
M327(OMF)	HSS20X12X5/8		34' - 7 13/16"	S7.1 - T.O. GYM COL.	30' - 11 13/16"	32' - 7 13/16"	29' - 11 13/16"
M328(OMF)	HSS20X12X5/8		20' - 0"	S7.1 - T.O. GYM COL.	30' - 11 13/16"	32' - 7 13/16"	29' - 11 13/16"
M329(OMF)	HSS20X12X5/8		21' - 6"	S7.1 - T.O. GYM COL.	30' - 11 13/16"	32' - 7 13/16"	29' - 11 13/16"
M330(OMF)	HSS20X12X5/8		41' - 2"	S7.1 - T.O. GYM COL.	30' - 11 13/16"	32' - 7 13/16"	29' - 11 13/16"
M331	HSS12X4X3/8 Tapered		3' - 6"	S7.1 - T.O. GYM COL.	29' - 11 13/16"	30' - 11 13/16"	29' - 11 13/16"
M331	HSS12X4X3/8		10' - 0"	S7.1 - T.O. GYM COL.	29' - 11 13/16"	30' - 11 13/16"	29' - 11 13/16"
M332	HSS8.625X.625		50' - 4"	S7.1 - T.O. GYM COL.	29' - 6 7/16"	30' - 3 1/16"	29' - 11 13/16"
M332	HSS8.625X.625		60' - 4"	S7.1 - T.O. GYM COL.	29' - 6 7/16"	30' - 3 1/16"	29' - 11 13/16"
M499	W12X79		84' - 6"	T.O. TOPPING SLAB	26' - 3 7/16"	27' - 3 27/32"	0' - 0"
M500	GB60	60"X36"	85' - 6"	T.O. FDN. SLAB	-3' - 3"	-0' - 3"	-0' - 3"
M501	GB60	60"X36"	85' - 6"	T.O. FDN. SLAB	-3' - 3"	-0' - 3"	-0' - 3"
M502	GB60	60"X36"	85' - 6"	T.O. FDN. SLAB	-3' - 3"	-0' - 3"	-0' - 3"
M503	GB60	60"X36"	85' - 6"	T.O. FDN. SLAB	-3' - 3"	-0' - 3"	-0' - 3"
M504	GB60	60"X36"	85' - 6"	T.O. FDN. SLAB	-3' - 3"	-0' - 3"	-0' - 3"
M505	GB60	60"X36"	65' - 6"	T.O. FDN. SLAB	-3' - 3"	-0' - 3"	-0' - 3"
M506	GB60	60"X36"	65' - 6"	T.O. FDN. SLAB	-3' - 3"	-0' - 3"	-0' - 3"
M507	GB60	60"X36"	85' - 6"	T.O. FDN. SLAB	-3' - 3"	-0' - 3"	-0' - 3"
M510	GB60	60"X36"	106' - 5"	T.O. FDN. SLAB	-3' - 3"	-0' - 3"	-0' - 3"
M511	GB60	60"X36"	106' - 5"	T.O. FDN. SLAB	-3' - 3"	-0' - 3"	-0' - 3"
M512	GB48	48"X36"	63' - 11 13/16"	T.O. FDN. SLAB	-3' - 3"	-0' - 3"	-0' - 3"
M513	GB48	48"X36"	106' - 5"	T.O. FDN. SLAB	-3' - 3"	-0' - 3"	-0' - 3"
M514	GB36	36"X36"	14' - 11"	T.O. FDN. SLAB	-3' - 3"	-0' - 3"	-0' - 3"
M515	GB36	36"X36"	15' - 1 1/16"	T.O. FDN. SLAB	-3' - 3"	-0' - 3"	-0' - 3"
M516	GB36	36"X36"	15' - 1 1/16"	T.O. FDN. SLAB	-3' - 3"	-0' - 3"	-0' - 3"
M517	GB36	36"X36"	15' - 9"	T.O. FDN. SLAB	-3' - 3"	-0' - 3"	-0' - 3"
M519	GB36	36"X36"	94' - 11 1/16"	T.O. FDN. SLAB	-3' - 3"	-0' - 3"	-0' - 3"
M520	GB36	36"X36"	93' - 5"	T.O. FDN. SLAB	-3' - 3"	-0' - 3"	-0' - 3"
M521	GB36	36"X36"	61' - 11 3/4"	T.O. FDN. SLAB	-3' - 3"	-0' - 3"	-0' - 3"
M522	GB36	36"X36"	51' - 9"	T.O. FDN. SLAB	-3' - 3"	-0' - 3"	-0' - 3"
M523	GB36	36"X36"	20' - 5"	T.O. FDN. SLAB	-3' - 3"	-0' - 3"	-0' - 3"
M524	GB36	36"X36"	73' - 5"	T.O. FDN. SLAB	-3' - 3"	-0' - 3"	-0' - 3"
M524A	GB36	36"X36"	18' - 2"	T.O. FDN. SLAB	-3' - 3"	-0' - 3"	-0' - 3"
M525	GB36	36"X36"	51' - 9 1/2"	T.O. FDN. SLAB	-3' - 3"	-0' - 3"	-0' - 3"
M526	GB36	36"X36"	94' - 11 1/16"	T.O. FDN. SLAB	-3' - 3"	-0' - 3"	-0' - 3"
M527	GB36	36"X36"	51' - 9 1/2"	T.O. FDN. SLAB	-3' - 3"	-0' - 3"	-0' - 3"
M528	GB24	24"X36"	5' - 5"	T.O. FDN. SLAB	-3' - 3"	-0' - 3"	-0' - 3"
M529	GB24	24"X36"	16' - 6"	T.O. FDN. SLAB	-3' - 3"	-0' - 3"	-0' - 3"
M530	GB24	24"X36"	5' - 5"	T.O. FDN. SLAB	-3' - 3"	-0' - 3"	-0' - 3"
M531	GB24	24"X36"	16' - 6"	T.O. FDN. SLAB	-3' - 3"	-0' - 3"	-0' - 3"
M532	GB24	24"X36"	5' - 5"	T.O. FDN. SLAB	-3' - 3"	-0' - 3"	-0' - 3"
M533	GB24	24"X36"	16' - 6"	T.O. FDN. SLAB	-3' - 3"	-0' - 3"	-0' - 3"
M534	GB24	24"X36"	5' - 5"	T.O. FDN. SLAB	-3' - 3"	-0' - 3"	-0' - 3"
M535	GB24	24"X36"	16' - 6"	T.O. FDN. SLAB	-3' - 3"	-0' - 3"	-0' - 3"
M538	GB36	36"X36"	51' - 9 1/2"	T.O. FDN. SLAB	-3' - 3"	-0' - 3"	-0' - 3"
M550	GB36	36"X36"	17' - 6 11/32"	T.O. FDN. SLAB	-3' - 3"	-0' - 3"	-0' - 3"
M550A	GB36	36"X36"	18' - 1"	T.O. FDN. SLAB	-3' - 3"	-0' - 3"	-0' - 3"
M551	GB36	36"X36"	10' - 5 1/16"	T.O. FDN. SLAB	-3' - 3"	-0' - 3"	-0' - 3"

BUREAU OF ENGINEERING
OFFICIAL RECORD

THE CITY OF LOS ANGELES OR ITS OFFICERS OR AGENTS SHALL NOT BE RESPONSIBLE FOR THE ACCURACY OR COMPLETENESS OF ELECTRONIC COPIES OF THIS PLAN SHEET.

TTLB TEMPLATE REVISION DATE: 02/2013
SHEET ISSUE DATE: 26.APR.19
FILE PATH: BIM 360://Studio City Recreation Center/SCRC-Structural.rvt

REVISION DATES (DESIGN STAGE ONLY)

BUREAU OF ENGINEERING
CITY OF LOS ANGELES

BUREAU OF PUBLIC WORKS
DEPARTMENT OF ENGINEERING
TED ALLEN, PE
CITY ENGINEER

NO.	REVISION DESCRIPTION	DATE	BY

INDEX NO. RP-300106
BUILDING NO. -

REGISTERED PROFESSIONAL ENGINEER
HOWARD N. ATARIN
NO. C-62199
EXP. 09-30-19
CIVIL
STATE OF CALIFORNIA

CITY ENGINEER	ARCHITECTURAL DIVISION
DATE:	29 APR. 19
ENGINEER:	NAST ENTERPRISES CORP. LIC. NO.: C-62199
DESIGNED BY:	H.N.
DRAWN BY:	H.N.
CHECKED BY:	H.N.
APPROVED BY:	MAHMOOD KARIMZADEH, AIA. DEPUTY CITY ENGINEER

ST Enterprises Corp.
554 E Main (Corner Blvd. #202, Los Angeles, CA 90048 Tel: (310) 210 - 3238

VERTICAL CONTROL:
HORIZONTAL CONTROL:
SHEET TITLE: STRUCTURAL BEAM SCHEDULE
PROJECT: STUDIO CITY GYMNASIUM
ADDRESS: 12621 RYE STREET, STUDIO CITY, CA 91604

WORK ORDER NO. Project Number
PLAN FILE NO.
DRAWING NO. S14.1
SHEET 129 OF SHEETS 211

PLOTTED:4/30/2019 5:27:59 PM

Structural Framing Schedule 3 Misc.

Mark	Type	WidthXDepth	Length	Reference Level	Elevation at Bottom	Elevation at Top	Reference Level Elevation
REQ10	HSS8X4X3/8		20' - 7 15/16"	S6 - T.O. MP ROOF	15' - 0"	15' - 8"	15' - 0"
REQ11	HSS6X6X3/8		12' - 10 11/32"	S6 - T.O. MP ROOF	15' - 0"	15' - 6"	15' - 0"
REQ12	HSS6X6X3/8		13' - 10 17/32"	S6 - T.O. MP ROOF	15' - 0"	15' - 6"	15' - 0"
REQ13	HSS6X6X3/8		14' - 6 3/16"	S6 - T.O. MP ROOF	15' - 0"	15' - 6"	15' - 0"
REQ14	HSS6X6X3/8		15' - 6 3/8"	S6 - T.O. MP ROOF	15' - 0"	15' - 6"	15' - 0"
REQ15	HSS6X6X3/8		16' - 1 7/8"	S6 - T.O. MP ROOF	15' - 0"	15' - 6"	15' - 0"
REQ16	HSS6X6X3/8		17' - 9 13/16"	S6 - T.O. MP ROOF	15' - 0"	15' - 6"	15' - 0"
REQ17	HSS8X4X3/8		33' - 6"	S7 - T.O. GYM ROOF	29' - 0"	29' - 8"	29' - 0"
REQ18	HSS8X4X3/8		33' - 6"	S7 - T.O. GYM ROOF	29' - 0"	29' - 8"	29' - 0"
REQ19	HSS8X4X3/8		17' - 0"	S7 - T.O. GYM ROOF	29' - 0"	29' - 8"	29' - 0"
REQ20	HSS8X4X3/8		17' - 0"	S7 - T.O. GYM ROOF	29' - 0"	29' - 8"	29' - 0"
REQ21	HSS8X4X3/8		18' - 0 9/32"	T.O. TOPPING SLAB	29' - 0"	29' - 8"	0' - 0"
REQ22	HSS8X4X3/8		18' - 0 9/32"	T.O. TOPPING SLAB	29' - 0"	29' - 8"	0' - 0"
REQ23	HSS8X4X3/8		21' - 3"	S7 - T.O. GYM ROOF	29' - 0"	29' - 8"	29' - 0"
REQ24	HSS8X4X3/8		20' - 6"	S7 - T.O. GYM ROOF	29' - 0"	29' - 8"	29' - 0"
REQ25	HSS8X4X3/8		33' - 6"	S7 - T.O. GYM ROOF	29' - 0"	29' - 8"	29' - 0"
REQ26	HSS8X4X3/8		17' - 0"	S7 - T.O. GYM ROOF	29' - 0"	29' - 8"	29' - 0"
REQ27	HSS8X4X3/8		33' - 6"	S7 - T.O. GYM ROOF	29' - 0"	29' - 8"	29' - 0"
REQ28	HSS8X4X3/8		17' - 0"	S7 - T.O. GYM ROOF	29' - 0"	29' - 8"	29' - 0"
T100	HSS3X.250		73' - 9"	S7.1 - T.O. GYM COL.	29' - 8 5/16"	29' - 11 5/16"	29' - 11 13/16"
T101	HSS3X.250		73' - 9"	S7.1 - T.O. GYM COL.	29' - 8 5/16"	29' - 11 5/16"	29' - 11 13/16"
T102	HSS3X.250		73' - 9"	S7.1 - T.O. GYM COL.	29' - 8 5/16"	29' - 11 5/16"	29' - 11 13/16"
T103	HSS3X.250		73' - 9"	S7.1 - T.O. GYM COL.	29' - 8 5/16"	29' - 11 5/16"	29' - 11 13/16"
T104	HSS3X.250		73' - 9"	S7.1 - T.O. GYM COL.	29' - 8 5/16"	29' - 11 5/16"	29' - 11 13/16"
T105	HSS3X.250		73' - 9"	S7.1 - T.O. GYM COL.	29' - 8 5/16"	29' - 11 5/16"	29' - 11 13/16"
T106	HSS3X.250		73' - 9"	S7.1 - T.O. GYM COL.	29' - 8 5/16"	29' - 11 5/16"	29' - 11 13/16"
T107	HSS3X.250		73' - 9"	S7.1 - T.O. GYM COL.	29' - 8 5/16"	29' - 11 5/16"	29' - 11 13/16"
T108	HSS3X.250		73' - 9"	S7.1 - T.O. GYM COL.	29' - 8 5/16"	29' - 11 5/16"	29' - 11 13/16"
T109	HSS3X.250		73' - 9"	S7.1 - T.O. GYM COL.	29' - 8 5/16"	29' - 11 5/16"	29' - 11 13/16"
T110	HSS3X.250		73' - 9"	S7.1 - T.O. GYM COL.	29' - 8 5/16"	29' - 11 5/16"	29' - 11 13/16"
T111	HSS3X.250		73' - 9"	S7.1 - T.O. GYM COL.	29' - 8 5/16"	29' - 11 5/16"	29' - 11 13/16"
T112	HSS3X.250		73' - 9"	S7.1 - T.O. GYM COL.	29' - 8 5/16"	29' - 11 5/16"	29' - 11 13/16"
T113	HSS3X.250		73' - 9"	S7.1 - T.O. GYM COL.	29' - 8 5/16"	29' - 11 5/16"	29' - 11 13/16"
T114	HSS3X.250		73' - 9"	S7.1 - T.O. GYM COL.	29' - 8 5/16"	29' - 11 5/16"	29' - 11 13/16"
T115	HSS3X.250		73' - 9"	S7.1 - T.O. GYM COL.	29' - 8 5/16"	29' - 11 5/16"	29' - 11 13/16"
T116	HSS3X.250		73' - 9"	S7.1 - T.O. GYM COL.	29' - 8 5/16"	29' - 11 5/16"	29' - 11 13/16"
T117	HSS3X.250		8' - 10"	S7.1 - T.O. GYM COL.	29' - 8 5/16"	29' - 11 5/16"	29' - 11 13/16"
T118	HSS3X.250		73' - 9"	S7.1 - T.O. GYM COL.	29' - 8 5/16"	29' - 11 5/16"	29' - 11 13/16"
T119	HSS3X.250		73' - 9"	S7.1 - T.O. GYM COL.	29' - 8 5/16"	29' - 11 5/16"	29' - 11 13/16"
T120	HSS3X.250		73' - 9"	S7.1 - T.O. GYM COL.	29' - 8 5/16"	29' - 11 5/16"	29' - 11 13/16"
T121	HSS3X.250		73' - 9"	S7.1 - T.O. GYM COL.	29' - 8 5/16"	29' - 11 5/16"	29' - 11 13/16"
T122	HSS3X.250		73' - 9"	S7.1 - T.O. GYM COL.	29' - 8 5/16"	29' - 11 5/16"	29' - 11 13/16"
T123	HSS3X.250		73' - 9"	S7.1 - T.O. GYM COL.	29' - 8 5/16"	29' - 11 5/16"	29' - 11 13/16"
T124	HSS3X.250		73' - 9"	S7.1 - T.O. GYM COL.	29' - 8 5/16"	29' - 11 5/16"	29' - 11 13/16"
T125	HSS3X.250		73' - 9"	S7.1 - T.O. GYM COL.	29' - 8 5/16"	29' - 11 5/16"	29' - 11 13/16"
T126	HSS3X.250		73' - 9"	S7.1 - T.O. GYM COL.	29' - 8 5/16"	29' - 11 5/16"	29' - 11 13/16"
T127	HSS3X.250		73' - 9"	S7.1 - T.O. GYM COL.	29' - 8 5/16"	29' - 11 5/16"	29' - 11 13/16"
T128	HSS3X.250		73' - 9"	S7.1 - T.O. GYM COL.	29' - 8 5/16"	29' - 11 5/16"	29' - 11 13/16"
T129	HSS3X.250		59' - 7 15/32"	S7.1 - T.O. GYM COL.	29' - 8 5/16"	29' - 11 5/16"	29' - 11 13/16"
T130	HSS3X.250		59' - 7 15/32"	S7.1 - T.O. GYM COL.	29' - 8 5/16"	29' - 11 5/16"	29' - 11 13/16"
T131	HSS3X.250		59' - 7 15/32"	S7.1 - T.O. GYM COL.	29' - 8 5/16"	29' - 11 5/16"	29' - 11 13/16"
T132	HSS3X.250		59' - 7 15/32"	S7.1 - T.O. GYM COL.	29' - 8 5/16"	29' - 11 5/16"	29' - 11 13/16"
T133	HSS3X.250		59' - 7 15/32"	S7.1 - T.O. GYM COL.	29' - 8 5/16"	29' - 11 5/16"	29' - 11 13/16"
T134	HSS3X.250		59' - 7 15/32"	S7.1 - T.O. GYM COL.	29' - 8 5/16"	29' - 11 5/16"	29' - 11 13/16"
T135	HSS3X.250		59' - 7 15/32"	S7.1 - T.O. GYM COL.	29' - 8 5/16"	29' - 11 5/16"	29' - 11 13/16"
T136	HSS3X.250		59' - 7 15/32"	S7.1 - T.O. GYM COL.	29' - 8 5/16"	29' - 11 5/16"	29' - 11 13/16"
T137	HSS3X.250		59' - 7 15/32"	S7.1 - T.O. GYM COL.	29' - 8 5/16"	29' - 11 5/16"	29' - 11 13/16"
T138	HSS3X.250		59' - 7 15/32"	S7.1 - T.O. GYM COL.	29' - 8 5/16"	29' - 11 5/16"	29' - 11 13/16"
T139	HSS3X.250		59' - 7 15/32"	S7.1 - T.O. GYM COL.	29' - 8 5/16"	29' - 11 5/16"	29' - 11 13/16"
T140	HSS3X.250		59' - 7 15/32"	S7.1 - T.O. GYM COL.	29' - 8 5/16"	29' - 11 5/16"	29' - 11 13/16"
T141	HSS3X.250		59' - 7 15/32"	S7.1 - T.O. GYM COL.	29' - 8 5/16"	29' - 11 5/16"	29' - 11 13/16"
T142	HSS3X.250		59' - 7 15/32"	S7.1 - T.O. GYM COL.	29' - 8 5/16"	29' - 11 5/16"	29' - 11 13/16"
T143	HSS3X.250		59' - 7 15/32"	S7.1 - T.O. GYM COL.	29' - 8 5/16"	29' - 11 5/16"	29' - 11 13/16"
T144	HSS3X.250		59' - 7 15/32"	S7.1 - T.O. GYM COL.	29' - 8 5/16"	29' - 11 5/16"	29' - 11 13/16"
T145	HSS3X.250		59' - 7 15/32"	S7.1 - T.O. GYM COL.	29' - 8 5/16"	29' - 11 5/16"	29' - 11 13/16"
T146	HSS3X.250		59' - 7 15/32"	S7.1 - T.O. GYM COL.	29' - 8 5/16"	29' - 11 5/16"	29' - 11 13/16"
T147	HSS3X.250		59' - 7 15/32"	S7.1 - T.O. GYM COL.	29' - 8 5/16"	29' - 11 5/16"	29' - 11 13/16"
T148	HSS3X.250		59' - 7 15/32"	S7.1 - T.O. GYM COL.	29' - 8 5/16"	29' - 11 5/16"	29' - 11 13/16"
T149	HSS3X.250		59' - 7 15/32"	S7.1 - T.O. GYM COL.	29' - 8 5/16"	29' - 11 5/16"	29' - 11 13/16"
T150	HSS3X.250		59' - 7 15/32"	S7.1 - T.O. GYM COL.	29' - 8 5/16"	29' - 11 5/16"	29' - 11 13/16"
T151	HSS3X.250		59' - 7 15/32"	S7.1 - T.O. GYM COL.	29' - 8 5/16"	29' - 11 5/16"	29' - 11 13/16"
T152	HSS3X.250		59' - 7 15/32"	S7.1 - T.O. GYM COL.	29' - 8 5/16"	29' - 11 5/16"	29' - 11 13/16"
T153	HSS3X.250		59' - 7 15/32"	S7.1 - T.O. GYM COL.	29' - 8 5/16"	29' - 11 5/16"	29' - 11 13/16"
T156	HSS3X.250		59' - 7 15/32"	S7.1 - T.O. GYM COL.	29' - 8 5/16"	29' - 11 5/16"	29' - 11 13/16"
T157	HSS3X.250		59' - 7 15/32"	S7.1 - T.O. GYM COL.	29' - 8 5/16"	29' - 11 5/16"	29' - 11 13/16"
T158	HSS3X.250		59' - 7 15/32"	S7.1 - T.O. GYM COL.	29' - 8 5/16"	29' - 11 5/16"	29' - 11 13/16"
T159	HSS3X.250		59' - 7 15/32"	S7.1 - T.O. GYM COL.	29' - 8 5/16"	29' - 11 5/16"	29' - 11 13/16"
T160	HSS3X.250		59' - 7 15/32"	S7.1 - T.O. GYM COL.	29' - 8 5/16"	29' - 11 5/16"	29' - 11 13/16"
T161	HSS3X.250		59' - 7 15/32"	S7.1 - T.O. GYM COL.	29' - 8 5/16"	29' - 11 5/16"	29' - 11 13/16"
T162	HSS3X.250		59' - 7 15/32"	S7.1 - T.O. GYM COL.	29' - 8 5/16"	29' - 11 5/16"	29' - 11 13/16"
T163	HSS3X.250		59' - 7 15/32"	S7.1 - T.O. GYM COL.	29' - 8 5/16"	29' - 11 5/16"	29' - 11 13/16"
T164	HSS3X.250		59' - 7 15/32"	S7.1 - T.O. GYM COL.	29' - 8 5/16"	29' - 11 5/16"	29' - 11 13/16"
T165	HSS3X.250		59' - 7 15/32"	S7.1 - T.O. GYM COL.	29' - 8 5/16"	29' - 11 5/16"	29' - 11 13/16"
T166	HSS3X.250		59' - 7 15/32"	S7.1 - T.O. GYM COL.	29' - 8 5/16"	29' - 11 5/16"	29' - 11 13/16"
T167	HSS3X.250		59' - 7 15/32"	S7.1 - T.O. GYM COL.	29' - 8 5/16"	29' - 11 5/16"	29' - 11 13/16"
T168	HSS3X.250		59' - 7 15/32"	S7.1 - T.O. GYM COL.	29' - 8 5/16"	29' - 11 5/16"	29' - 11 13/16"
T169	HSS3X.250		59' - 7 15/32"	S7.1 - T.O. GYM COL.	29' - 8 5/16"	29' - 11 5/16"	29' - 11 13/16"
T170	HSS3X.250		59' - 7 15/32"	S7.1 - T.O. GYM COL.	29' - 8 5/16"	29' - 11 5/16"	29' - 11 13/16"

Structural Framing Schedule 3 Misc.

Mark	Type	WidthXDepth	Length	Reference Level	Elevation at Bottom	Elevation at Top	Reference Level Elevation
T171	HSS3X.250		59' - 7 15/32"	S7.1 - T.O. GYM COL.	29' - 8 5/16"	29' - 11 5/16"	29' - 11 13/16"
T172	HSS3X.250		59' - 7 15/32"	S7.1 - T.O. GYM COL.	29' - 8 5/16"	29' - 11 5/16"	29' - 11 13/16"
T173	HSS3X.250		59' - 7 15/32"	S7.1 - T.O. GYM COL.	29' - 8 5/16"	29' - 11 5/16"	29' - 11 13/16"
T174	HSS3X.250		59' - 7 15/32"	S7.1 - T.O. GYM COL.	29' - 8 5/16"	29' - 11 5/16"	29' - 11 13/16"
T175	HSS3X.250		59' - 7 15/32"	S7.1 - T.O. GYM COL.	29' - 8 5/16"	29' - 11 5/16"	29' - 11 13/16"
T176	HSS3X.250		49' - 7 29/32"	S7.1 - T.O. GYM COL.	29' - 8 5/16"	29' - 11 5/16"	29' - 11 13/16"
T177	HSS3X.250		49' - 7 29/32"	S7.1 - T.O. GYM COL.	29' - 8 5/16"	29' - 11 5/16"	29' - 11 13/16"
T178	HSS3X.250		49' - 7 29/32"	S7.1 - T.O. GYM COL.	29' - 8 5/16"	29' - 11 5/16"	29' - 11 13/16"
T179	HSS3X.250		49' - 7 29/32"	S7.1 - T.O. GYM COL.	29' - 8 5/16"	29' - 11 5/16"	29' - 11 13/16"
T180	HSS3X.250		49' - 7 29/32"	S7.1 - T.O. GYM COL.	29' - 8 5/16"	29' - 11 5/16"	29' - 11 13/16"
T181	HSS3X.250		49' - 7 29/32"	S7.1 - T.O. GYM COL.	29' - 8 5/16"	29' - 11 5/16"	29' - 11 13/16"
T182	HSS3X.250		49' - 7 29/32"	S7.1 - T.O. GYM COL.	29' - 8 5/16"	29' - 11 5/16"	29' - 11 13/16"
T183	HSS3X.250		49' - 7 29/32"	S7.1 - T.O. GYM COL.	29' - 8 5/16"	29' - 11 5/16"	29' - 11 13/16"
T184	HSS3X.250		49' - 7 29/32"	S7.1 - T.O. GYM COL.	29' - 8 5/16"	29' - 11 5/16"	29' - 11 13/16"
T185	HSS3X.250		49' - 7 29/32"	S7.1 - T.O. GYM COL.	29' - 8 5/16"	29' - 11 5/16"	29' - 11 13/16"
T186	HSS3X.250		49' - 7 29/32"	S7.1 - T.O. GYM COL.	29' - 8 5/16"	29' - 11 5/16"	29' - 11 13/16"
T187	HSS3X.250		49' - 7 29/32"	S7.1 - T.O. GYM COL.	29' - 8 5/16"	29' - 11 5/16"	29' - 11 13/16"
T188	HSS3X.250		49' - 7 29/32"	S7.1 - T.O. GYM COL.	29' - 8 5/16"	29' - 11 5/16"	29' - 11 13/16"
T189	HSS3X.250		49' - 7 29/32"	S7.1 - T.O. GYM COL.	29' - 8 5/16"	29' - 11 5/16"	29' - 11 13/16"
T190	HSS3X.250		49' - 7 29/32"	S7.1 - T.O. GYM COL.	29' - 8 5/16"	29' - 11 5/16"	29' - 11 13/16"
T191	HSS3X.250		49' - 7 29/32"	S7.1 - T.O. GYM COL.	29' - 8 5/16"	29' - 11 5/16"	29' - 11 13/16"
T192	HSS3X.250		49' - 7 29/32"	S7.1 - T.O. GYM COL.	29' - 8 5/16"	29' - 11 5/16"	29' - 11 13/16"
T193	HSS3X.250		49' - 7 29/32"	S7.1 - T.O. GYM COL.	29' - 8 5/16"	29' - 11 5/16"	29' - 11 13/16"
T194	HSS3X.250		49' - 7 29/32"	S7.1 - T.O. GYM COL.	29' - 8 5/16"	29' - 11 5/16"	29' - 11 13/16"
T195	HSS3X.250		49' - 7 29/32"	S7.1 - T.O. GYM COL.	29' - 8 5/16"	29' - 11 5/16"	29' - 11 13/16"
T196	HSS3X.250		49' - 7 29/32"	S7.1 - T.O. GYM COL.	29' - 8 5/16"	29' - 11 5/16"	29' - 11 13/16"
T197	HSS3X.250		49' - 7 29/32"	S7.1 - T.O. GYM COL.	29' - 8 5/16"	29' - 11 5/16"	29' - 11 13/16"
T198	HSS3X.250		49' - 7 29/32"	S7.1 - T.O. GYM COL.	29' - 8 5/16"	29' - 11 5/16"	29' - 11 13/16"
T199	HSS3X.250		49' - 7 29/32"	S7.1 - T.O. GYM COL.	29' - 8 5/16"	29' - 11 5/16"	29' - 11 13/16"
T200	HSS3X.250		49' - 7 29/32"	S7.1 - T.O. GYM COL.	29' - 8 5/16"	29' - 11 5/16"	29' - 11 13/16"
T201	HSS3X.250		49' - 7 29/32"	S7.1 - T.O. GYM COL.	29' - 8 5/16"	29' - 11 5/16"	29' - 11 13/16"
T202	HSS3X.250		49' - 7 29/32"	S7.1 - T.O. GYM COL.	29' - 8 5/16"	29' - 11 5/16"	29' - 11 13/16"
T203	HSS3X.250		49' - 7 29/32"	S7.1 - T.O. GYM COL.	29' - 8 5/16"	29' - 11 5/16"	29' - 11 13/16"
T204	HSS3X.250		49' - 7 29/32"	S7.1 - T.O. GYM COL.	29' - 8 5/16"	29' - 11 5/16"	29' - 11 13/16"
T205	HSS3X.250		49' - 7 29/32"	S7.1 - T.O. GYM COL.	29' - 8 5/16"	29' - 11 5/16"	29' - 11 13/16"
T206	HSS3X.250		49' - 7 29/32"	S7.1 - T.O. GYM COL.	29' - 8 5/16"	29' - 11 5/16"	29' - 11 13/16"
T207	HSS3X.250		49' - 7 29/32"	S7.1 - T.O. GYM COL.	29' - 8 5/16"	29' - 11 5/16"	29' - 11 13/16"
T208	HSS3X.250		49' - 7 29/32"	S7.1 - T.O. GYM COL.	29' - 8 5/16"	29' - 11 5/16"	29' - 11 13/16"
T209	HSS3X.250		49' - 7 29/32"	S7.1 - T.O. GYM COL.	29' - 8 5/16"	29' - 11 5/16"	29' - 11 13/16"
T210	HSS3X.250		49' - 7 29/32"	S7.1 - T.O. GYM COL.	29' - 8 5/16"	29' - 11 5/16"	29' - 11 13/16"
T211	HSS3X.250		49' - 7 29/32"	S7.1 - T.O. GYM COL.	29' - 8 5/16"	29' - 11 5/16"	29' - 11 13/16"
T212	HSS3X.250		49' - 7 29/32"	S7.1 - T.O. GYM COL.	29' - 8 5/16"	29' - 11 5/16"	29' - 11 13/16"
T213	HSS3X.250		49' - 7 29/32"	S7.1 - T.O. GYM COL.	29' - 8 5/16"	29' - 11 5/16"	29' - 11 13/16"
T214	HSS3X.250		49' - 7 29/32"	S7.1 - T.O. GYM COL.	29' - 8 5/16"	29' - 11 5/16"	29' - 11 13/16"
T215	HSS3X.250		49' - 7 29/32"	S7.1 - T.O. GYM COL.	29' - 8 5/16"	29' - 11 5/16"	29' - 11 13/16"
T216	HSS3X.250		49' - 7 29/32"	S7.1 - T.O. GYM COL.	29' - 8 5/16"	29' - 11 5/16"	29' - 11 13/16"
T217	HSS3X.250		49' - 7 29/32"	S7.1 - T.O. GYM COL.	29' - 8 5/16"	29' - 11 5/16"	29' - 11 13/16"
T218	HSS3X.250		49' - 7 29/32"	S7.1 - T.O. GYM COL.	29' - 8 5/16"	29' - 11 5/16"	29' - 11 13/16"
T219	HSS3X.250		49' - 7 29/32"	S7.1 - T.O. GYM COL.	29' - 8 5/16"	29' - 11 5/16"	29' - 11 13/16"
T220	HSS3X.250		49' - 7 29/32"	S7.1 - T.O. GYM COL.	29' - 8 5/16"	29' - 11 5/16"	29' - 11 13/16"
T221	HSS3X.250		54' - 10"	S7.1 - T.O. GYM COL.	29' - 8 5/16"	29' - 11 5/16"	29' - 11 13/16"
T222	HSS3X.250		54' - 10"	S7.1 - T.O. GYM COL.	29' - 8 5/16"	29' - 11 5/16"	29' - 11 13/16"
T223	HSS3X.250		54' - 10"	S7.1 - T.O. GYM COL.	29' - 8 5/16"	29' - 11 5/16"	29' - 11 13/16"
T224	HSS3X.250		54' - 10"	S7.1 - T.O. GYM COL.	29' - 8 5/16"	29' - 11 5/16"	29' - 11 13/16"
T224	HSS3X.250		54' - 10"	S7.1 - T.O. GYM COL.	29' - 8 5/16"	29' - 11 5/16"	29' - 11 13/16"
T225	HSS3X.250		54' - 10"	S7.1 - T.O. GYM COL.	29' - 8 5/16"	29' - 11 5/16"	29' - 11 13/16"
T226	HSS3X.250		54' - 10"	S7.1 - T.O. GYM COL.	29' - 8 5/16"	29' - 11 5/16"	29' - 11 13/16"
T227	HSS3X.250		54' - 10"	S7.1 - T.O. GYM COL.	29' - 8 5/16"	29' - 11 5/16"	29' - 11 13/16"
T228	HSS3X.250		18' - 2"	S7.1 - T.O. GYM COL.	29' - 7 3/4"	29' - 10 3/4"	29' - 11 13/16"
T229	HSS3X.250		18' - 2"	S7.1 - T.O. GYM COL.	29' - 7 3/4"	29' - 10 3/4"	29' - 11 13/16"
T230	HSS3X.250		18' - 2"	S7.1 - T.O. GYM COL.	29' - 7 3/4"	29' - 10 3/4"	29' - 11 13/16"
T231	HSS3X.250		18' - 2"	S7.1 - T.O. GYM COL.	29' - 7 3/4"	29' - 10 3/4"	29' - 11 13/16"
T232	HSS3X.250		18' - 2"	S7.1 - T.O. GYM COL.	29' - 7 3/4"	29' - 10 3/4"	29' - 11 13/16"
T233	HSS3X.250		18' - 2"	S7.1 - T.O. GYM COL.	29' - 7 3/4"	29' - 10 3/4"	29' - 11 13/16"
T234	HSS3X.250		18' - 2"	S7.1 - T.O. GYM COL.	29' - 7 3/4"	29' - 10 3/4"	29' - 11 13/16"
T235	HSS3X.250		8' - 10"	S7.1 - T.O. GYM COL.	29' - 8 5/16"	29' - 11 5/16"	29' - 11 13/16"
T235	HSS3X.250		18' - 2"	S7.1 - T.O. GYM COL.	29' - 7 3/4"	29' - 10 3/4"	29' - 11 13/16"
T236	HSS3X.250		8' - 10"	S7.1 - T.O. GYM COL.	29' - 8 5/16"	29' - 11 5/16"	29' - 11 13/16"
T237	HSS3X.250		8' - 10"	S7.1 - T.O. GYM COL.	29' - 8 5/16"	29' - 11 5/16"	29' - 11 13/16"
T238	HSS3X.250		8' - 10"	S7.1 - T.O. GYM COL.	29' - 8 5/16"	29' - 11 5/16"	29' - 11 13/16"
T239	HSS3X.250		8' - 10"	S7.1 - T.O. GYM COL.	29' - 8 5/16"	29' - 11 5/16"	29' - 11 13/16"
T240	HSS3X.250		8' - 10"	S7.1 - T.O. GYM COL.	29' - 8 5/16"	29' - 11 5/16"	29' - 11 13/16"
T241	HSS3X.250		8' - 10"	S7.1 - T.O. GYM COL.	29' - 8 5/16"	29' - 11 5/16"	29' - 11 13/16"
T242	HSS3X.250		73' - 9"	S7.1 - T.O. GYM COL.	29' - 8 5/16"	29' - 11 5/16"	29' - 11 13/16"
T243	HSS3X.250		73' - 9"	S7.1 - T.O. GYM COL.	29' - 8 5/16"	29' - 11 5/16"	29' - 11 13/16"
T244	HSS3X.250		73' - 9"	S7.1 - T.O. GYM COL.	29' - 8 5/16"	29' - 11 5/16"	29' - 11 13/16"
T245	HSS3X.250		73' - 9"	S7.1 - T.O. GYM COL.	29' - 8 5/16"	29' - 11 5/16"	29' - 11 13/16"
T246	HSS3X.250		73' - 9"	S7.1 - T.O. GYM COL.	29' - 8 5/16"	29' - 11 5/16"	29' - 11 13/16"
T247	HSS3X.250		73' - 9"	S7.1 - T.O. GYM COL.	29' - 8 5/16"	29' - 11 5/16"	29' - 11 13/16"
T248	HSS3X.250		132' - 8 1/2"	S7 - T.O. GYM ROOF	28' - 8 3/4"	28' - 11 3/4"	29' - 0"
T249	HSS3X.250		132' - 8 1/2"	S7 - T.O. GYM ROOF	28' - 0 3/4"	28' - 3 3/4"	29' - 0"
T250	HSS3X.250		132' - 8 1/2"	S7 - T.O. GYM ROOF	27' - 4 3/4"	27' - 7 3/4"	29' - 0"
T251	HSS3X.250		132' - 8 1/2"	S7 - T.O. GYM ROOF	26' - 8 3/4"	26' - 11 3/4"	29' - 0"
T252	HSS3X.250		132' - 8 1/2"	S7 - T.O. GYM ROOF	26' - 0 3/4"	26' - 3 3/4"	29' - 0"
T253	HSS3X.250		132' - 8 1/2"	S7 - T.O. GYM ROOF	25' - 4 3/4"	25' - 7 3/4"	29' - 0"
T254	HSS3X.250		132' - 8 1/2"	S7 - T.O. GYM ROOF	24' - 8 3/4"	24' - 11 3/4"	29' - 0"
T255	HSS3X.250		132' - 8 1/2"	S7 - T.O. GYM ROOF	24' - 0 3/4"	24' - 3 3/4"	29' - 0"

THE CITY OF LOS ANGELES OR ITS OFFICERS OR AGENTS SHALL NOT BE RESPONSIBLE FOR THE ACCURACY OR COMPLETENESS OF ELECTRONIC COPIES OF THIS PLAN SHEET.

TTLB TEMPLATE REVISION DATE: 02/2013
SHEET ISSUE DATE: 26 APR 19
FILE PATH: BIM 360://Studio City Recreation Center/SCRC-Structural.rvt

REVISION DATES (DESIGN STAGE ONLY)

BUREAU OF ENGINEERING
OFFICIAL RECORD

BUREAU OF ENGINEERING
CITY OF LOS ANGELES

NO.	REVISION DESCRIPTION	DATE	BY

BUILDING NO. -
INDEX NO. RP-300106

REGISTERED PROFESSIONAL ENGINEER
HOWARD NASTARIN
NO. C-62199
Exp. 09-30-19
CIVIL
STATE OF CALIFORNIA

DEPARTMENT OF PUBLIC WORKS
CITY OF LOS ANGELES

TED ALLEN, PE — CITY ENGINEER
ARCHITECTURAL DIVISION

ENGINEER:	NAST ENTERPRISES CORP.	LIC. NO.: C-62199
DESIGNED BY:	H.N.	29 APR 19
DRAWN BY:	H.N.	29 APR 19
CHECKED BY:	H.N.	29 APR 19
APPROVED BY:	MAHMOOD KARIMZADEH, AIA. DEPUTY CITY ENGINEER	29 APR 19

VERTICAL CONTROL:
HORIZONTAL CONTROL:

SHEET TITLE: STRUCTURAL BEAM SCHEDULE
PROJECT: STUDIO CITY GYMNASIUM
ADDRESS: 12621 RYE STREET, STUDIO CITY, CA 91604

ST Enterprises Corp.
554 S San Vicente Blvd. #202, Los Angeles, CA 90048
Tel: (310) 210 - 3238

WORK ORDER NO.
Project Number
PLAN FILE NO.
DRAWING NO.
S14.2
SHEET 130 OF SHEETS 211

PLOTTED:4/30/2019 5:28:00 PM

Matt Foundation Grade Beam Rebar Schedule 1 of 2

Host Mark	Host Category	Family and Type	Bar Length	Bend Diameter	Hook At End	Hook At Start	Quantity	Quantity By Rebar Set	Rebar Number	Shape	Spacing	Style	Type
M500													
M500	Structural Framing	Rebar Bar: #4	10' - 5 7/8"	2.00"	Stirrup/Tie Seismic - 135 deg.	Stirrup/Tie Seismic - 135 deg.	244	244	65	S3	0' - 4"	Stirrup / Tie	#4
M500	Structural Framing	Rebar Bar: #5	112' - 7 7/8"	3.75"	Standard - 90 deg.	Standard - 90 deg.	4	4	53	02		Standard	#5
M501													
M501	Structural Framing	Rebar Bar: #4	10' - 5 15/16"	2.00"	Stirrup/Tie Seismic - 135 deg.	Stirrup/Tie Seismic - 135 deg.	110	110	66	S3	0' - 4"	Stirrup / Tie	#4
M501	Structural Framing	Rebar Bar: #4	10' - 5 15/16"	2.00"	Stirrup/Tie Seismic - 135 deg.	Stirrup/Tie Seismic - 135 deg.	20	20	66	S3	1' - 6"	Stirrup / Tie	#4
M501	Structural Framing	Rebar Bar: #4	10' - 5 15/16"	2.00"	Stirrup/Tie Seismic - 135 deg.	Stirrup/Tie Seismic - 135 deg.	52	52	66	S3	0' - 4"	Stirrup / Tie	#4
M501	Structural Framing	Rebar Bar: #5	11' - 7 7/8"	3.75"	Standard - 90 deg.	Standard - 90 deg.	4	4	94	02		Standard	#5
M501	Structural Framing	Rebar Bar: #5	11' - 7 7/8"	3.75"	Standard - 90 deg.	Standard - 90 deg.	4	4	94	02		Standard	#5
M501	Structural Framing	Rebar Bar: #5	11' - 7 7/8"	3.75"	Standard - 90 deg.	Standard - 90 deg.	4	4	94	02		Standard	#5
M501	Structural Framing	Rebar Bar: #5	11' - 7 7/8"	3.75"	Standard - 90 deg.	Standard - 90 deg.	4	4	94	02		Standard	#5
M502													
M502	Structural Framing	Rebar Bar: #4	10' - 5 15/16"	2.00"	Stirrup/Tie Seismic - 135 deg.	Stirrup/Tie Seismic - 135 deg.	110	110	66	S3	0' - 4"	Stirrup / Tie	#4
M502	Structural Framing	Rebar Bar: #4	10' - 5 15/16"	2.00"	Stirrup/Tie Seismic - 135 deg.	Stirrup/Tie Seismic - 135 deg.	20	20	66	S3	1' - 6"	Stirrup / Tie	#4
M502	Structural Framing	Rebar Bar: #4	10' - 5 15/16"	2.00"	Stirrup/Tie Seismic - 135 deg.	Stirrup/Tie Seismic - 135 deg.	52	52	66	S3	0' - 4"	Stirrup / Tie	#4
M502	Structural Framing	Rebar Bar: #5	9' - 7 21/32"	2.50"	Stirrup/Tie Seismic - 135 deg.	Stirrup/Tie Seismic - 135 deg.	139	139	52	S3	0' - 9"	Stirrup / Tie	#5
M503													
M503	Structural Framing	Rebar Bar: #4	10' - 5 15/16"	2.00"	Stirrup/Tie Seismic - 135 deg.	Stirrup/Tie Seismic - 135 deg.	109	109	66	S3	0' - 4"	Stirrup / Tie	#4
M503	Structural Framing	Rebar Bar: #4	10' - 5 15/16"	2.00"	Stirrup/Tie Seismic - 135 deg.	Stirrup/Tie Seismic - 135 deg.	19	19	66	S3	1' - 6"	Stirrup / Tie	#4
M503	Structural Framing	Rebar Bar: #4	10' - 5 15/16"	2.00"	Stirrup/Tie Seismic - 135 deg.	Stirrup/Tie Seismic - 135 deg.	52	52	66	S3	0' - 4"	Stirrup / Tie	#4
M504													
M504	Structural Framing	Rebar Bar: #4	10' - 5 15/16"	2.00"	Stirrup/Tie Seismic - 135 deg.	Stirrup/Tie Seismic - 135 deg.	108	108	66	S3	0' - 4"	Stirrup / Tie	#4
M504	Structural Framing	Rebar Bar: #4	10' - 6"	2.00"	Stirrup/Tie Seismic - 135 deg.	Stirrup/Tie Seismic - 135 deg.	20	20	87	S3	1' - 6"	Stirrup / Tie	#4
M504	Structural Framing	Rebar Bar: #4	10' - 5 15/16"	2.00"	Stirrup/Tie Seismic - 135 deg.	Stirrup/Tie Seismic - 135 deg.	52	52	66	S3	0' - 4"	Stirrup / Tie	#4
M504	Structural Framing	Rebar Bar: #8	92' - 1"	6.00"	Standard - 90 deg.	Standard - 90 deg.	12	12	75	02		Standard	#8
M504	Structural Framing	Rebar Bar: #8	92' - 1"	6.00"	Standard - 90 deg.	Standard - 90 deg.	12	12	75	02		Standard	#8
M504	Structural Framing	Rebar Bar: #8	92' - 1"	6.00"	Standard - 90 deg.	Standard - 90 deg.	12	12	75	02		Standard	#8
M505													
M505	Structural Framing	Rebar Bar: #4	10' - 5 15/16"	2.00"	Stirrup/Tie Seismic - 135 deg.	Stirrup/Tie Seismic - 135 deg.	47	47	66	S3	0' - 4"	Stirrup / Tie	#4
M505	Structural Framing	Rebar Bar: #4	10' - 5 15/16"	2.00"	Stirrup/Tie Seismic - 135 deg.	Stirrup/Tie Seismic - 135 deg.	52	52	66	S3	0' - 4"	Stirrup / Tie	#4
M505	Structural Framing	Rebar Bar: #4	10' - 5 15/16"	2.00"	Stirrup/Tie Seismic - 135 deg.	Stirrup/Tie Seismic - 135 deg.	20	20	66	S3	1' - 6"	Stirrup / Tie	#4
M505	Structural Framing	Rebar Bar: #8	72' - 7"	6.00"	Standard - 90 deg.	Standard - 90 deg.	12	12	88	02		Standard	#8
M505	Structural Framing	Rebar Bar: #8	72' - 7"	6.00"	Standard - 90 deg.	Standard - 90 deg.	12	12	88	02		Standard	#8
M505	Structural Framing	Rebar Bar: #8	72' - 7"	6.00"	Standard - 90 deg.	Standard - 90 deg.	12	12	88	02		Standard	#8
M506													
M506	Structural Framing	Rebar Bar: #5	22' - 8 11/16"	3.75"	Standard - 90 deg.	Standard - 90 deg.	4	4	92	02		Standard	#5
M506	Structural Framing	Rebar Bar: #5	22' - 8 7/8"	3.75"	Standard - 90 deg.	Standard - 90 deg.	4	4	91	02		Standard	#5
M506	Structural Framing	Rebar Bar: #5	22' - 8 7/8"	3.75"	Standard - 90 deg.	Standard - 90 deg.	4	4	91	02		Standard	#5
M506	Structural Framing	Rebar Bar: #8	72' - 7"	6.00"	Standard - 90 deg.	Standard - 90 deg.	12	12	88	02		Standard	#8
M506	Structural Framing	Rebar Bar: #8	72' - 7"	6.00"	Standard - 90 deg.	Standard - 90 deg.	12	12	88	02		Standard	#8
M506	Structural Framing	Rebar Bar: #4	10' - 5 15/16"	2.00"	Stirrup/Tie Seismic - 135 deg.	Stirrup/Tie Seismic - 135 deg.	53	53	66	S3	0' - 4"	Stirrup / Tie	#4
M506	Structural Framing	Rebar Bar: #8	72' - 7"	6.00"	Standard - 90 deg.	Standard - 90 deg.	12	12	88	02		Standard	#8
M506	Structural Framing	Rebar Bar: #4	10' - 5 15/16"	2.00"	Stirrup/Tie Seismic - 135 deg.	Stirrup/Tie Seismic - 135 deg.	52	52	66	S3	0' - 4"	Stirrup / Tie	#4
M506	Structural Framing	Rebar Bar: #4	10' - 5 7/8"	2.00"	Stirrup/Tie Seismic - 135 deg.	Stirrup/Tie Seismic - 135 deg.	20	20	89	S3	1' - 6"	Stirrup / Tie	#4
M507													
M507	Structural Framing	Rebar Bar: #3	7' - 5 3/8"	1.50"	Stirrup/Tie Seismic - 135 deg.	Stirrup/Tie Seismic - 135 deg.	18	18	158	S3	0' - 9"	Stirrup / Tie	#3
M507	Structural Framing	Rebar Bar: #3	7' - 5 23/32"	1.50"	Stirrup/Tie Seismic - 135 deg.	Stirrup/Tie Seismic - 135 deg.	18	18	156	S3	0' - 9"	Stirrup / Tie	#3
M507	Structural Framing	Rebar Bar: #3	7' - 5 23/32"	1.50"	Stirrup/Tie Seismic - 135 deg.	Stirrup/Tie Seismic - 135 deg.	18	18	156	S3	0' - 9"	Stirrup / Tie	#3
M510													
M510	Structural Framing	Rebar Bar: #8	92' - 1"	6.00"	Standard - 90 deg.	Standard - 90 deg.	12	12	75	02		Standard	#8
M510	Structural Framing	Rebar Bar: #8	92' - 1 1/2"	6.00"	Standard - 90 deg.	Standard - 90 deg.	12	12	83	02		Standard	#8
M510	Structural Framing	Rebar Bar: #8	92' - 0 15/16"	6.00"	Standard - 90 deg.	Standard - 90 deg.	12	12	79	02		Standard	#8
M510	Structural Framing	Rebar Bar: #8	92' - 1"	6.00"	Standard - 90 deg.	Standard - 90 deg.	12	12	75	02		Standard	#8
M510	Structural Framing	Rebar Bar: #8	92' - 1"	6.00"	Standard - 90 deg.	Standard - 90 deg.	12	12	75	02		Standard	#8
M510	Structural Framing	Rebar Bar: #8	92' - 1 1/16"	6.00"	Standard - 90 deg.	Standard - 90 deg.	12	12	72	02		Standard	#8
M510	Structural Framing	Rebar Bar: #8	113' - 6"	6.00"	Standard - 90 deg.	Standard - 90 deg.	12	12	49	02		Standard	#8
M510	Structural Framing	Rebar Bar: #4	10' - 5 15/16"	2.00"	Stirrup/Tie Seismic - 135 deg.	Stirrup/Tie Seismic - 135 deg.	304	304	66	S3	0' - 4"	Stirrup / Tie	#4
M510	Structural Framing	Rebar Bar: #3	8' - 5 11/16"	1.50"	Stirrup/Tie Seismic - 135 deg.	Stirrup/Tie Seismic - 135 deg.	13	13	61	S3	0' - 9"	Stirrup / Tie	#3
M510	Structural Framing	Rebar Bar: #8	92' - 1"	6.00"	Standard - 90 deg.	Standard - 90 deg.	12	12	75	02		Standard	#8
M510	Structural Framing	Rebar Bar: #8	92' - 0 15/16"	6.00"	Standard - 90 deg.	Standard - 90 deg.	12	12	80	02		Standard	#8
M510	Structural Framing	Rebar Bar: #8	92' - 0 15/16"	6.00"	Standard - 90 deg.	Standard - 90 deg.	12	12	67	02		Standard	#8
M510	Structural Framing	Rebar Bar: #8	113' - 6"	6.00"	Standard - 90 deg.	Standard - 90 deg.	12	12	49	02		Standard	#8
M510	Structural Framing	Rebar Bar: #8	113' - 6"	6.00"	Standard - 90 deg.	Standard - 90 deg.	12	12	49	02		Standard	#8
M510	Structural Framing	Rebar Bar: #8	92' - 1"	6.00"	Standard - 90 deg.	Standard - 90 deg.	12	12	77	02		Standard	#8
M510	Structural Framing	Rebar Bar: #8	92' - 1 1/32"	6.00"	Standard - 90 deg.	Standard - 90 deg.	12	12	77	02		Standard	#8
M510	Structural Framing	Rebar Bar: #3	8' - 5 11/16"	1.50"	Stirrup/Tie Seismic - 135 deg.	Stirrup/Tie Seismic - 135 deg.	15	15	61	S3	0' - 9"	Stirrup / Tie	#3
M510	Structural Framing	Rebar Bar: #3	8' - 5 11/16"	1.50"	Stirrup/Tie Seismic - 135 deg.	Stirrup/Tie Seismic - 135 deg.	15	15	61	S3	0' - 9"	Stirrup / Tie	#3
M510	Structural Framing	Rebar Bar: #3	8' - 5 11/16"	1.50"	Stirrup/Tie Seismic - 135 deg.	Stirrup/Tie Seismic - 135 deg.	17	17	61	S3	0' - 9"	Stirrup / Tie	#3
M510	Structural Framing	Rebar Bar: #8	92' - 1 1/2"	6.00"	Standard - 90 deg.	Standard - 90 deg.	12	12	83	02		Standard	#8
M510	Structural Framing	Rebar Bar: #8	92' - 1 1/2"	6.00"	Standard - 90 deg.	Standard - 90 deg.	12	12	83	02		Standard	#8
M510	Structural Framing	Rebar Bar: #8	92' - 1 9/32"	6.00"	Standard - 90 deg.	Standard - 90 deg.	12	12	85	02		Standard	#8
M510	Structural Framing	Rebar Bar: #8	92' - 1 9/32"	6.00"	Standard - 90 deg.	Standard - 90 deg.	12	12	86	02		Standard	#8

THE CITY OF LOS ANGELES OR ITS OFFICERS OR AGENTS SHALL NOT BE RESPONSIBLE FOR THE ACCURACY OR COMPLETENESS OF ELECTRONIC COPIES OF THIS PLAN SHEET.

TTLB TEMPLATE REVISION DATE: 02/2013
SHEET ISSUE DATE: 26.APR.19
FILE PATH: BIM 360://Studio City Recreation Center/SCRC-Structural.rvt

REVISION DATES (DESIGN STAGE ONLY)

BUREAU OF ENGINEERING
OFFICIAL RECORD

BUREAU OF ENGINEERING
PUBLIC WORKS
DEPARTMENT OF PUBLIC WORKS
CITY OF LOS ANGELES
ENGINEERING
CITY OF LOS ANGELES

NO.	REVISION DESCRIPTION	DATE	BY

BUILDING NO. -
INDEX NO. RP-300106

REGISTERED PROFESSIONAL ENGINEER
NASTARIN
NO. C-62199
Exp. 09-30-19
CIVIL
STATE OF CALIFORNIA

TED ALLEN, PE
ARCHITECTURAL DIVISION
ENGINEER: NAST ENTERPRISES CORP. LIC. NO.: C-62199
DESIGNED BY: H.N.
DRAWN BY: H.N.
CHECKED BY: H.N.
APPROVED BY: MAHMOOD KARIMZADEH, AIA, DEPUTY CITY ENGINEER

CITY ENGINEER
DATE: 29 APR. 19
VERTICAL CONTROL:
HORIZONTAL CONTROL:
SHEET TITLE: FOUNDATION GRADE BEAM REINF. SCHED. M500-M510
PROJECT: STUDIO CITY GYMNASIUM
ADDRESS: 12621 RYE STREET, STUDIO CITY, CA 91604

ST Enterprises Corp.
554 S San Vicente Blvd. #202, Los Angeles, CA 90048 Tel: (310) 210 - 3238

WORK ORDER NO. Project Number
PLAN FILE NO.
DRAWING NO. S15
SHEET 131 OF SHEETS 211

PLOTTED:4/30/2019 5:28:01 PM

Matt Foundation Grade Beam Rebar Schedule 2 of 2

Host Mark	Host Category	Family and Type	Bar Length	Bend Diameter	Hook At End	Hook At Start	Quantity	Quantity By Rebar Set	Rebar Number	Shape	Spacing	Style	Type
M511													
M511	Structural Framing	Rebar Bar: #5	98' - 7 29/32"	3.75"	Standard - 90 deg.	Standard - 90 deg.	6	6	63	02		Standard	#5
M511	Structural Framing	Rebar Bar: #5	98' - 7 29/32"	3.75"	Standard - 90 deg.	Standard - 90 deg.	6	6	63	02		Standard	#5
M511	Structural Framing	Rebar Bar: #8	113' - 6"	6.00"	Standard - 90 deg.	Standard - 90 deg.	12	12	49	02		Standard	#8
M511	Structural Framing	Rebar Bar: #4	10' - 5 15/16"	2.00"	Stirrup/Tie Seismic - 135 deg.	Stirrup/Tie Seismic - 135 deg.	304	304	66	S3	0' - 4"	Stirrup / Tie	#4
M511	Structural Framing	Rebar Bar: #8	113' - 6"	6.00"	Standard - 90 deg.	Standard - 90 deg.	12	12	49	02		Standard	#8
M511	Structural Framing	Rebar Bar: #8	113' - 6"	6.00"	Standard - 90 deg.	Standard - 90 deg.	12	12	49	02		Standard	#8
M511	Structural Framing	Rebar Bar: #8	113' - 6"	6.00"	Standard - 90 deg.	Standard - 90 deg.	12	12	49	02		Standard	#8
M511	Structural Framing	Rebar Bar: #5	8' - 3 15/16"	3.75"	Standard - 90 deg.	Standard - 90 deg.	6	6	145	02		Standard	#5
M512													
M512	Structural Framing	Rebar Bar: #5	66' - 6 13/16"	3.75"	Standard - 90 deg.	Standard - 90 deg.	6	6	55	02		Standard	#5
M512	Structural Framing	Rebar Bar: #3	9' - 5 11/16"	1.50"	Stirrup/Tie Seismic - 135 deg.	Stirrup/Tie Seismic - 135 deg.	83	83	54	S3	0' - 9"	Stirrup / Tie	#3
M512	Structural Framing	Rebar Bar: #5	21' - 4 27/32"	3.75"	Standard - 90 deg.	Standard - 90 deg.	6	6	81	02		Standard	#5
M513													
M513	Structural Framing	Rebar Bar: #5	112' - 7 7/8"	3.75"	Standard - 90 deg.	Standard - 90 deg.	4	4	53	02		Standard	#5
M515													
M515	Structural Framing	Rebar Bar: #5	21' - 4 27/32"	3.75"	Standard - 90 deg.	Standard - 90 deg.	6	6	81	02		Standard	#5
M516													
M516	Structural Framing	Rebar Bar: #5	21' - 4 27/32"	3.75"	Standard - 90 deg.	Standard - 90 deg.	6	6	81	02		Standard	#5
M517													
M517	Structural Framing	Rebar Bar: #5	21' - 4 27/32"	3.75"	Standard - 90 deg.	Standard - 90 deg.	6	6	81	02		Standard	#5
M519													
M519	Structural Framing	Rebar Bar: #3	8' - 5 11/16"	1.50"	Stirrup/Tie Seismic - 135 deg.	Stirrup/Tie Seismic - 135 deg.	119	119	61	S3	0' - 9"	Stirrup / Tie	#3
M520													
M520	Structural Framing	Rebar Bar: #3	8' - 5 11/16"	1.50"	Stirrup/Tie Seismic - 135 deg.	Stirrup/Tie Seismic - 135 deg.	99	99	61	S3	0' - 6"	Stirrup / Tie	#3
M520	Structural Framing	Rebar Bar: #5	8' - 7 21/32"	2.50"	Stirrup/Tie Seismic - 135 deg.	Stirrup/Tie Seismic - 135 deg.	119	119	8	S3	0' - 9"	Stirrup / Tie	#5
M520	Structural Framing	Rebar Bar: #3	8' - 5 11/16"	1.50"	Stirrup/Tie Seismic - 135 deg.	Stirrup/Tie Seismic - 135 deg.	101	101	61	S3	0' - 6"	Stirrup / Tie	#3
M520	Structural Framing	Rebar Bar: #3	8' - 5 11/16"	1.50"	Stirrup/Tie Seismic - 135 deg.	Stirrup/Tie Seismic - 135 deg.	65	65	61	S3	0' - 6"	Stirrup / Tie	#3
M521													
M521	Structural Framing	Rebar Bar: #5	63' - 2 1/8"	3.75"	Standard - 90 deg.	Standard - 90 deg.	6	6	57	02		Standard	#5
M521	Structural Framing	Rebar Bar: #5	63' - 2 1/8"	3.75"	Standard - 90 deg.	Standard - 90 deg.	6	6	57	02		Standard	#5
M521	Structural Framing	Rebar Bar: #3	8' - 5 25/32"	1.50"	Stirrup/Tie Seismic - 135 deg.	Stirrup/Tie Seismic - 135 deg.	117	117	157	S3	0' - 6"	Stirrup / Tie	#3
M523													
M523	Structural Framing	Rebar Bar: #5	24' - 7 7/8"	3.75"	Standard - 90 deg.	Standard - 90 deg.	6	6	69	02		Standard	#5
M523	Structural Framing	Rebar Bar: #5	24' - 7 13/16"	3.75"	Standard - 90 deg.	Standard - 90 deg.	6	6	70	02		Standard	#5
M523	Structural Framing	Rebar Bar: #3	8' - 5 11/16"	1.50"	Stirrup/Tie Seismic - 135 deg.	Stirrup/Tie Seismic - 135 deg.	39	39	61	S3	0' - 6"	Stirrup / Tie	#3
M524													
M524	Structural Framing	Rebar Bar: #5	78' - 1 7/8"	3.75"	Standard - 90 deg.	Standard - 90 deg.	6	6	16	02		Standard	#5
M524	Structural Framing	Rebar Bar: #3	8' - 5 11/16"	1.50"	Stirrup/Tie Seismic - 135 deg.	Stirrup/Tie Seismic - 135 deg.	141	141	61	S3	0' - 6"	Stirrup / Tie	#3
M524A													
M524A	Structural Framing	Rebar Bar: #5	25' - 8 7/8"	3.75"	Standard - 90 deg.	Standard - 90 deg.	6	6	93	02		Standard	#5
M524A	Structural Framing	Rebar Bar: #3	8' - 5 11/16"	1.50"	Stirrup/Tie Seismic - 135 deg.	Stirrup/Tie Seismic - 135 deg.	31	31	61	S3	0' - 6"	Stirrup / Tie	#3
M525													
M525	Structural Framing	Rebar Bar: #5	8' - 7 21/32"	2.50"	Stirrup/Tie Seismic - 135 deg.	Stirrup/Tie Seismic - 135 deg.	10	10	8	S3	0' - 9"	Stirrup / Tie	#5
M526													
M526	Structural Framing	Rebar Bar: #5	98' - 7 29/32"	3.75"	Standard - 90 deg.	Standard - 90 deg.	6	6	63	02		Standard	#5
M526	Structural Framing	Rebar Bar: #3	8' - 5 11/16"	1.50"	Stirrup/Tie Seismic - 135 deg.	Stirrup/Tie Seismic - 135 deg.	180	180	61	S3	0' - 6"	Stirrup / Tie	#3
M526	Structural Framing	Rebar Bar: #5	56' - 0 3/8"	3.75"	Standard - 90 deg.	Standard - 90 deg.	6	6	13	02		Standard	#5
M526	Structural Framing	Rebar Bar: #5	56' - 0 3/8"	3.75"	Standard - 90 deg.	Standard - 90 deg.	6	6	13	02		Standard	#5
M526	Structural Framing	Rebar Bar: #5	39' - 0 11/16"	3.75"	Standard - 90 deg.	Standard - 90 deg.	6	6	146	02		Standard	#5
M527													
M527	Structural Framing	Rebar Bar: #5	55' - 11 7/8"	3.75"	Standard - 90 deg.	Standard - 90 deg.	6	6	152	02		Standard	#5
M527	Structural Framing	Rebar Bar: #3	8' - 5 11/16"	1.50"	Stirrup/Tie Seismic - 135 deg.	Stirrup/Tie Seismic - 135 deg.	100	100	61	S3	0' - 6"	Stirrup / Tie	#3
M528													
M528	Structural Framing	Rebar Bar: #5	11' - 7 7/8"	3.75"	Standard - 90 deg.	Standard - 90 deg.	4	4	94	02		Standard	#5
M528	Structural Framing	Rebar Bar: #3	7' - 5 11/16"	1.50"	Stirrup/Tie Seismic - 135 deg.	Stirrup/Tie Seismic - 135 deg.	2	2	90	S3	0' - 9"	Stirrup / Tie	#3
M529													
M529	Structural Framing	Rebar Bar: #5	22' - 8 7/8"	3.75"	Standard - 90 deg.	Standard - 90 deg.	4	4	91	02		Standard	#5
M529	Structural Framing	Rebar Bar: #3	7' - 5 11/16"	1.50"	Stirrup/Tie Seismic - 135 deg.	Stirrup/Tie Seismic - 135 deg.	18	18	90	S3	0' - 9"	Stirrup / Tie	#3
M529	Structural Framing	Rebar Bar: #4	10' - 5 15/16"	2.00"	Stirrup/Tie Seismic - 135 deg.	Stirrup/Tie Seismic - 135 deg.	244	244	66	S3	0' - 4"	Stirrup / Tie	#4
M530													
M530	Structural Framing	Rebar Bar: #3	7' - 5 11/16"	1.50"	Stirrup/Tie Seismic - 135 deg.	Stirrup/Tie Seismic - 135 deg.	2	2	90	S3	0' - 9"	Stirrup / Tie	#3
M532													
M532	Structural Framing	Rebar Bar: #3	7' - 5 11/16"	1.50"	Stirrup/Tie Seismic - 135 deg.	Stirrup/Tie Seismic - 135 deg.	2	2	90	S3	0' - 9"	Stirrup / Tie	#3
M534													
M534	Structural Framing	Rebar Bar: #3	7' - 5 11/16"	1.50"	Stirrup/Tie Seismic - 135 deg.	Stirrup/Tie Seismic - 135 deg.	2	2	90	S3	0' - 9"	Stirrup / Tie	#3
M538													
M538	Structural Framing	Rebar Bar: #5	55' - 11 7/8"	3.75"	Standard - 90 deg.	Standard - 90 deg.	4	4	152	02		Standard	#5
M538	Structural Framing	Rebar Bar: #3	8' - 5 11/16"	1.50"	Stirrup/Tie Seismic - 135 deg.	Stirrup/Tie Seismic - 135 deg.	67	67	61	S3	0' - 9"	Stirrup / Tie	#3
M550													
M550	Structural Framing	Rebar Bar: #5	15' - 2 31/32"	3.75"	Standard - 90 deg.	Standard - 90 deg.	6	6	148	02		Standard	#5
M550	Structural Framing	Rebar Bar: #3	8' - 5 11/16"	1.50"	Stirrup/Tie Seismic - 135 deg.	Stirrup/Tie Seismic - 135 deg.	29	29	61	S3	0' - 6"	Stirrup / Tie	#3
M550A													
M550A	Structural Framing	Rebar Bar: #3	8' - 5 11/16"	1.50"	Stirrup/Tie Seismic - 135 deg.	Stirrup/Tie Seismic - 135 deg.	30	30	61	S3	0' - 6"	Stirrup / Tie	#3
M550A	Structural Framing	Rebar Bar: #5	17' - 0 1/8"	3.75"	Standard - 90 deg.	Standard - 90 deg.	6	6	150	02		Standard	#5

THE CITY OF LOS ANGELES OR ITS OFFICERS OR AGENTS SHALL NOT BE RESPONSIBLE FOR THE ACCURACY OR COMPLETENESS OF ELECTRONIC COPIES OF THIS PLAN SHEET.

TTLB TEMPLATE REVISION DATE: 02/2013
SHEET ISSUE DATE: 26.APR.19
FILE PATH: BIM 360://Studio City Recreation Center/SCRC-Structural.rvt

REVISION DATES (DESIGN STAGE ONLY)

BUREAU OF ENGINEERING
OFFICIAL RECORD

CITY OF LOS ANGELES
DEPARTMENT OF PUBLIC WORKS
BUREAU OF ENGINEERING
ST Enterprises Corp.
554 S Sam Vicente Blvd., #202, Los Angeles, CA 90048 Tel: (310) 210 - 3238

ENGINEERING
CITY OF LOS ANGELES

NO.	REVISION DESCRIPTION	DATE	BY

BUILDING NO. -
INDEX NO. RP-300106

REGISTERED PROFESSIONAL ENGINEER
TED ALLEN, PE
NO. C-62199
Exp. 09-30-19
CIVIL
STATE OF CALIFORNIA

CITY ENGINEER		
DATE:		
29 APR 19		
29 APR 19		
29 APR 19		
29 APR 19		
29 APR 19		

TED ALLEN, PE
ARCHITECTURAL DIVISION
ENGINEER: NAST ENTERPRISES CORP. LIC. NO.: C-62199
DESIGNED BY: H.N.
DRAWN BY: H.N.
CHECKED BY: H.N.
APPROVED BY: MAHMOOD KARIMZADEH, AIA, DEPUTY CITY ENGINEER

VERTICAL CONTROL:
HORIZONTAL CONTROL:
SHEET TITLE: FOUNDATION GRADE BEAM REINF. SCHED. M511-M552
PROJECT: STUDIO CITY GYMNASIUM
ADDRESS: 12621 RYE STREET, STUDIO CITY, CA 91604

WORK ORDER NO. Project Number
PLAN FILE NO.
DRAWING NO. S16
SHEET 132 OF SHEETS 211

PLOTTED:4/30/2019 5:28:02 PM

THE CITY OF LOS ANGELES OR ITS OFFICERS OR AGENTS SHALL NOT BE RESPONSIBLE FOR THE ACCURACY OR COMPLETENESS OF ELECTRONIC COPIES OF THIS PLAN SHEET.

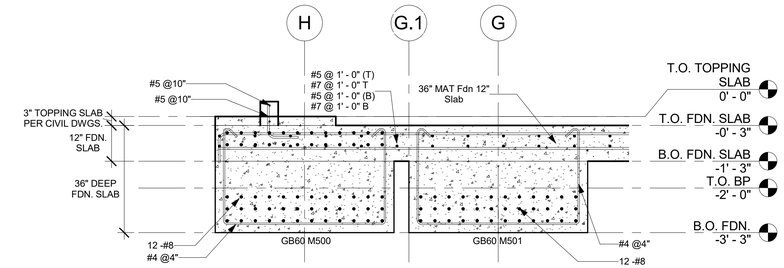

1 S17-1 GB SECTION M500 & M501
1/2" = 1'-0"

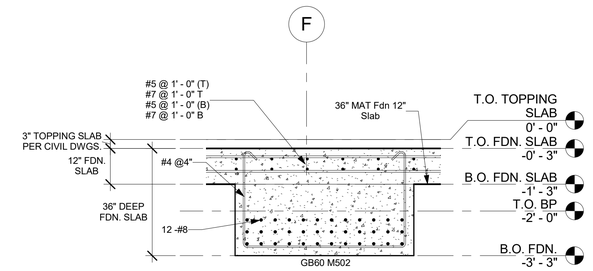

2 S17-2 GB SECTION M502
1/2" = 1'-0"

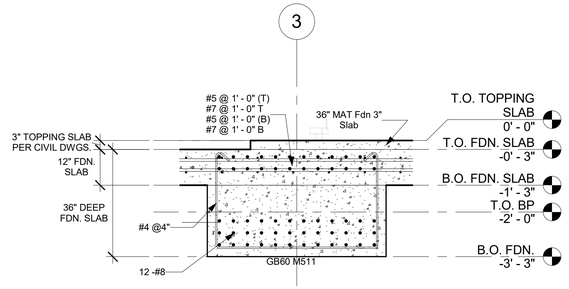

3 S17-3 GB SECTION M511
1/2" = 1'-0"

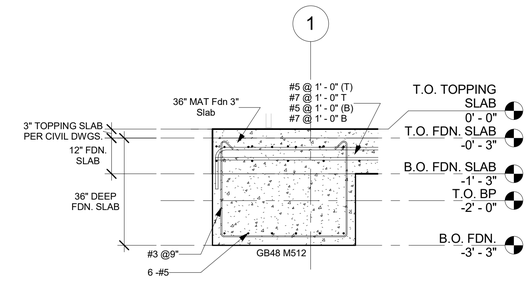

4 S17-4 GB SECTION M512
1/2" = 1'-0"

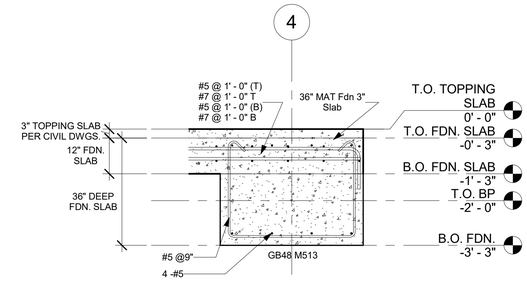

5 S17-5 GB SECTION M513
1/2" = 1'-0"

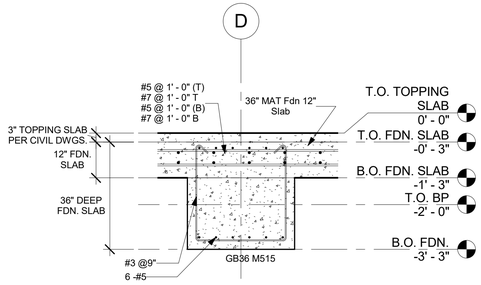

6 S17-6 GB SECTION M515
1/2" = 1'-0"

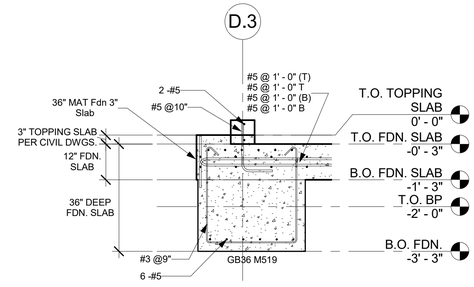

7 S17-7 GB SECTION M519
1/2" = 1'-0"

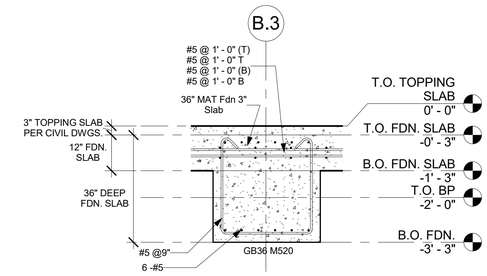

8 S17-8 GB SECTION M520
1/2" = 1'-0"

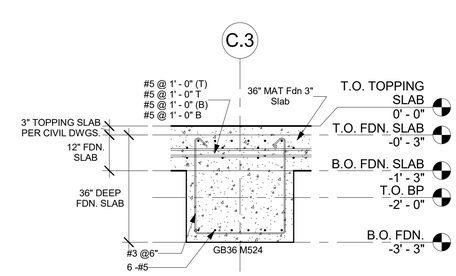

9 S17-9 GB SECTION M524
1/2" = 1'-0"

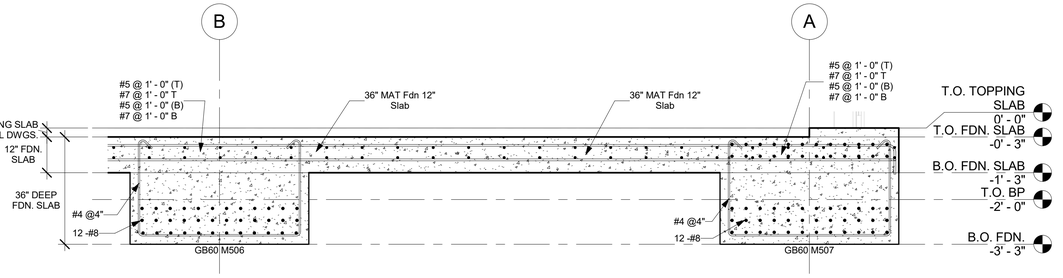

10 S17-10 GB SECTION M506 & M507
1/2" = 1'-0"

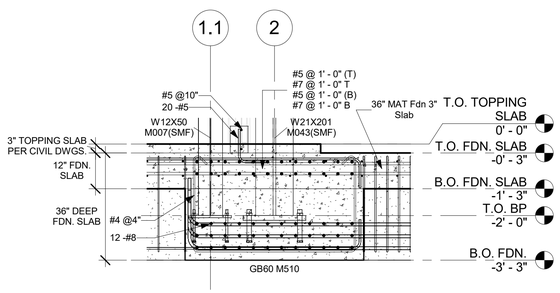

11 S17-11 GB SECTION M510
1/2" = 1'-0"

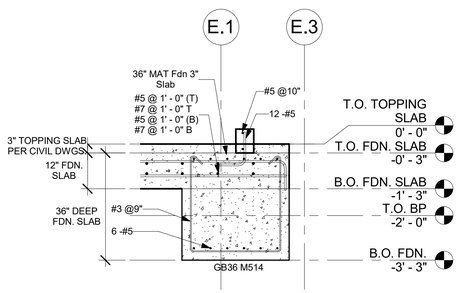

12 S17-12 GB SECTION M514
1/2" = 1'-0"

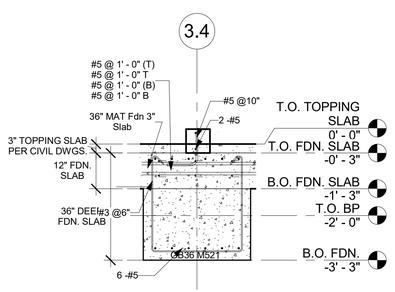

13 S17-13 GB SECTION M521
1/2" = 1'-0"

BUREAU OF ENGINEERING
OFFICIAL RECORD

CITY OF LOS ANGELES
BUREAU OF ENGINEERING
DEPARTMENT OF PUBLIC WORKS
ENGINEERING
CITY OF LOS ANGELES
TED ALLEN, PE
ARCHITECTURAL DIVISION
ENGINEER: NAST ENTERPRISES CORP. LIC. NO: C-62199
DESIGNED BY: H.N.
DRAWN BY: H.N.
CHECKED BY: H.N.
APPROVED BY: MAHMOOD KARIMZADEH, AIA, DEPUTY CITY ENGINEER
CITY ENGINEER
DATE: 29 APR. 19
29 APR. 19
29 APR. 19
29 APR. 19
29 APR. 19
29 APR. 19
NO. REVISION DESCRIPTION DATE BY
BUILDING NO. -
INDEX NO. RP-300106
REGISTERED PROFESSIONAL ENGINEER MOHAMMAD NAST KARIM NO. C-62199 Exp. 09-30-19 CIVIL STATE OF CALIFORNIA

VERTICAL CONTROL:
HORIZONTAL CONTROL:
SHEET TITLE: FOUNDATION SECTIONS
PROJECT: STUDIO CITY GYMNASIUM
ADDRESS: 12621 RYE STREET, STUDIO CITY, CA 91604

CITY OF LOS ANGELES
ST Enterprises Corp.
524 S San Vicente Blvd., #202, Los Angeles, CA 90048 Tel: (310) 210 - 3238

WORK ORDER NO. Project Number
PLAN FILE NO.
DRAWING NO. S17
SHEET 133 OF SHEETS 211

PLOTTED:4/30/2019 5:28:03 PM

TTLB TEMPLATE REVISION DATE: 02/2013
SHEET ISSUE DATE: 26 APR. 19
FILE PATH: BIM 360://Studio City Recreation Center/SCRC-Structural.rvt

REVISION DATES (DESIGN STAGE ONLY)

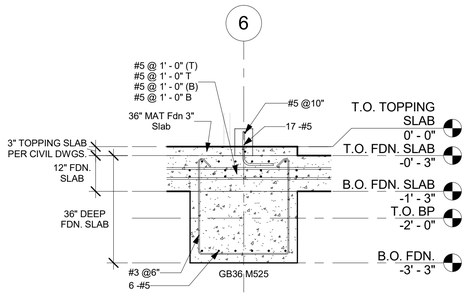

1 S18-1 GB SECTION M525
1/2" = 1'-0"

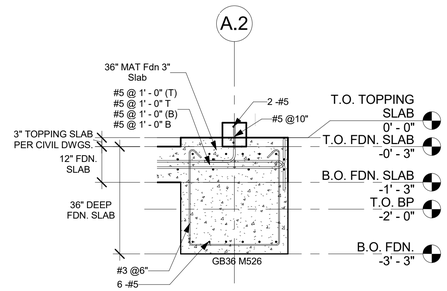

2 S18-2 GB SECTION M526
1/2" = 1'-0"

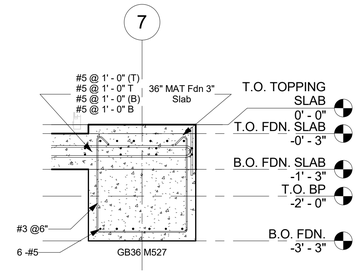

3 S18-3 GB SECTION M527
1/2" = 1'-0"

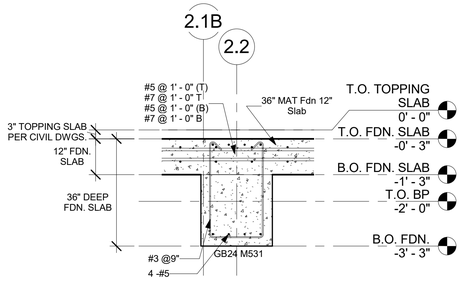

4 S18-4 GB SECTION M531
1/2" = 1'-0"

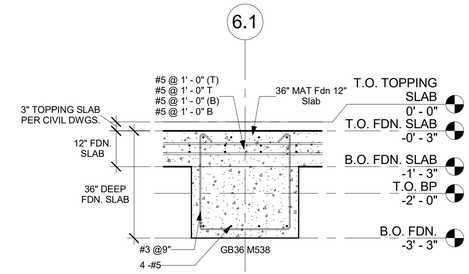

5 S18-5 GB SECTION M538
1/2" = 1'-0"

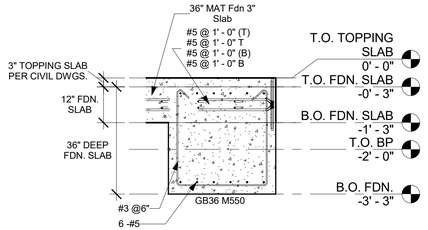

6 S18-6 GB SECTION M550
1/2" = 1'-0"

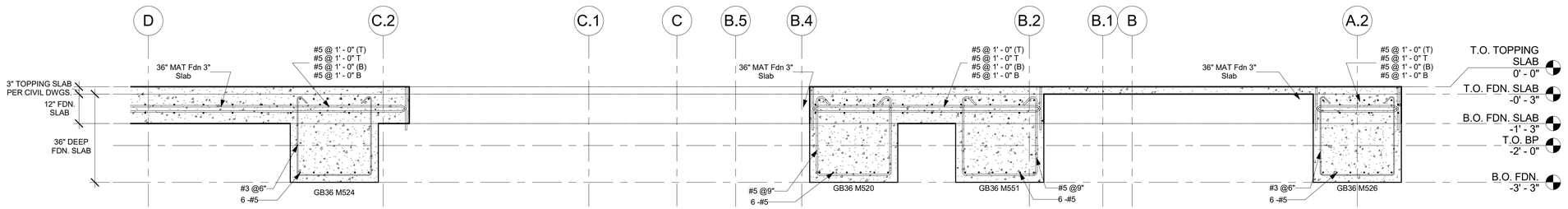

7 S18-7 GB SECTION THROUGH COURTYARD
1/2" = 1'-0"

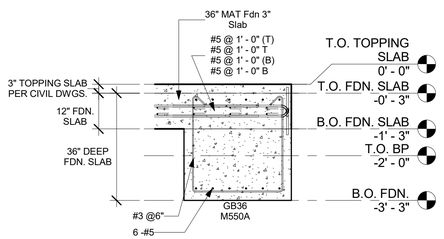

8 S18-8 GB SECTION M550A
1/2" = 1'-0"

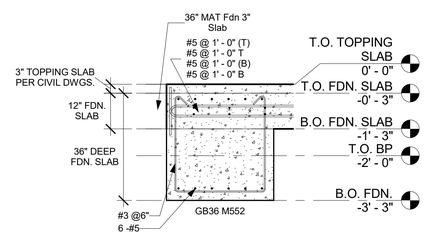

9 S18-9 GB SECTION M552
1/2" = 1'-0"

BUREAU OF ENGINEERING
OFFICIAL RECORD

THE CITY OF LOS ANGELES OR ITS OFFICERS OR AGENTS SHALL NOT BE RESPONSIBLE FOR THE ACCURACY OR COMPLETENESS OF ELECTRONIC COPIES OF THIS PLAN SHEET.

TTLB TEMPLATE REVISION DATE: 02/2013
SHEET ISSUE DATE: 26 APR 19
FILE PATH: BIM 360://Studio City Recreation Center/SCRC-Structural.rvt

REVISION DATES
(DESIGN STAGE ONLY)

BUREAU OF ENGINEERING
ENGINEERING
CITY OF LOS ANGELES

NO.	REVISION DESCRIPTION	DATE	BY

BUILDING NO. -
INDEX NO. RP-300106

REGISTERED PROFESSIONAL ENGINEER
HOWARD NAST KARIN
NO. C-62199
EXP. 09-30-19
CIVIL
STATE OF CALIFORNIA

DEPARTMENT OF PUBLIC WORKS
CITY OF LOS ANGELES

TED ALLEN, PE — CITY ENGINEER — DATE:

ARCHITECTURAL DIVISION	
ENGINEER:	NAST ENTERPRISES CORP. LIC. NO: C-62199
DESIGNED BY:	H.N.
DRAWN BY:	H.N.
CHECKED BY:	H.N.
APPROVED BY:	MAHMOOD KARIMZADEH, AIA, DEPUTY CITY ENGINEER

	DATE
	29 APR. 19
	29 APR. 19
	29 APR. 19
	29 APR. 19
	29 APR. 19

VERTICAL CONTROL:
HORIZONTAL CONTROL:

SHEET TITLE: FOUNDATION SECTIONS

PROJECT: STUDIO CITY GYMNASIUM

ADDRESS: 12621 RYE STREET, STUDIO CITY, CA 91604

ST Enterprises Corp.
524 S San Vicente Blvd., #202, Los Angeles, CA 90048
Tel: (310) 210 - 3238

WORK ORDER NO.
Project Number
PLAN FILE NO.
DRAWING NO.
S18
SHEET 134 OF SHEETS 211

PLOTTED:4/30/2019 5:28:06 PM

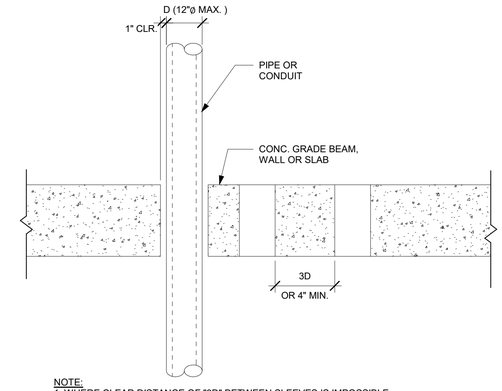

NOTE:
1. WHERE CLEAR DISTANCE OF "3D" BETWEEN SLEEVES IS IMPOSSIBLE, THIS AREA SHALL BE TRATED AS A SLAB OPENING PER TYPICAL DETAILS.

S19-1 PIPE/CONDUIT THRU FDN/SLABS AND WALLS DETAILS
1 AND WALLS DETAILS
1" = 1'-0"

THE CITY OF LOS ANGELES OR ITS OFFICERS OR AGENTS SHALL NOT BE RESPONSIBLE FOR THE ACCURACY OR COMPLETENESS OF ELECTRONIC COPIES OF THIS PLAN SHEET.

REVISION DATES
(DESIGN STAGE ONLY)

TTLB TEMPLATE REVISION DATE: 02/2013
SHEET ISSUE DATE: 26 APR 19
FILE PATH: BIM 360://Studio City Recreation Center/SCRC-Structural.rvt

BUREAU OF ENGINEERING
OFFICIAL RECORD

BUREAU OF ENGINEERING
ENGINEERING
CITY OF LOS ANGELES

NO.	REVISION DESCRIPTION	DATE	BY

BUILDING NO. -
INDEX NO. RP-300106

REGISTERED PROFESSIONAL ENGINEER
MAHMOOD KARIMZADEH
No. C-62199
Exp. 09-30-19
CIVIL
STATE OF CALIFORNIA

DEPARTMENT OF PUBLIC WORKS
CITY OF LOS ANGELES

TED ALLEN, PE
CITY ENGINEER

	ARCHITECTURAL DIVISION	CITY ENGINEER DATE:
ENGINEER:	NAST ENTERPRISES CORP. LIC. NO.: C-62199	29 APR. 19
DESIGNED BY:	H.N.	29 APR. 19
DRAWN BY:	H.N.	29 APR. 19
CHECKED BY:	H.N.	29 APR. 19
APPROVED BY:	MAHMOOD KARIMZADEH, AIA, DEPUTY CITY ENGINEER	29 APR. 19

VERTICAL CONTROL:
HORIZONTAL CONTROL:

SHEET TITLE: SLAB + FDN. SECTIONS AND DETAILS

PROJECT: STUDIO CITY GYMNASIUM

ADDRESS: 12621 RYE STREET, STUDIO CITY, CA 91604

WORK ORDER NO.
Project Number
PLAN FILE NO.
DRAWING NO.
S19
SHEET 135 OF SHEETS 211

ST Enterprises Corp.
504 S San Vicente Blvd., #202, Los Angeles, CA 90048 Tel: (310) 210 - 3238

PLOTTED:4/30/2019 5:26:07 PM

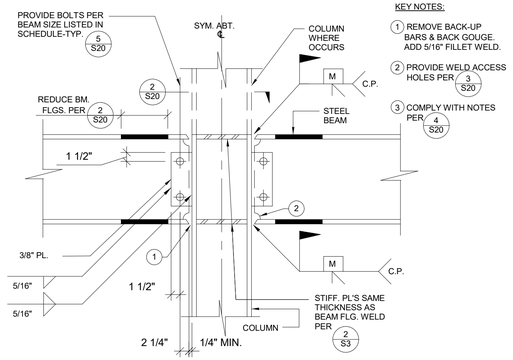

KEY NOTES:

1. REMOVE BACK-UP BARS & BACK GOUGE. ADD 5/16" FILLET WELD.
2. PROVIDE WELD ACCESS HOLES PER 3 S20
3. COMPLY WITH NOTES PER 4 S20

S20-1 TYP. BEAM TO COLUMN FLANGE SMF MOMENT CONN.
1 1" = 1'-0"

BEAM SIZE	A	B	C	BRACE SIZE	GUSSET PL.	BM. BRACE SPC'G.
W12X96	9.120"	10.80"	2.43"	HSS6X6X3/8	3/4"X8"X12-1/2"	$L_{b\text{-}MAX.}$ = 12.5'
W10X30	3.825"	8.93"	1.02"	HSS4X4X5/16	1/2"X6"X10-1/2"	$L_{b\text{-}MAX.}$ = 5.5'

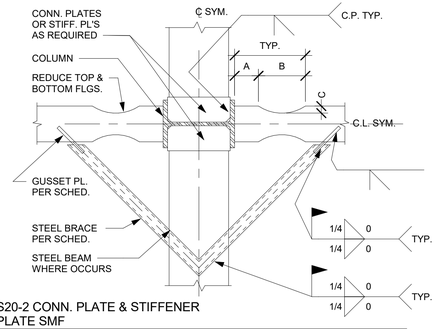

S20-2 CONN. PLATE & STIFFENER PLATE SMF
2 1" = 1'-0"

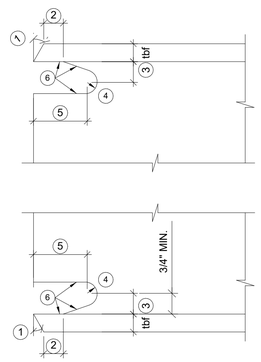

TOLERANCES SHALL NOT ACCUMULATE TO THE EXTENT THAT THE ANGLE OF THE ACCESS HOLE CUT TO THE FLANGE SURFACE EXCEEDS 25°

NOTE:

1. BEVEL AS REQUIRED BY AWS D1.1 FOR SELECTED GROOVE WELD PROCEDURE.
2. LARGER OF tbf OR 1/2". (PLUS 1/2" tbf, OR MINUS 1/4 tbf)
3. 3/4 tbf TO tbf, 3/4" MIN.(± 1/4")
4. 3/8" MIN. RADIUS (PLUS NOT LIMITED, OR MINUS O)
5. 3 tbf. (± 1/2")
6. SEE FEMA-353, RECOMMENDED SPECIFICATIONS AND QUALITY ASSURANCE GUIDELINES FOR STEEL MOMENT-FRAME CONSTRUCTION FOR SEISMIC APPLICATIONS, FOR FABRICATION DETAILS INCLUDING CUTTING METHODS AND SMOOTHNESS REQUIREMENTS.

S20-3 WELD ACCESS HOLES SMF
3 1" = 1'-0"

1. WELDING ELECTRODES SHALL CONFORM TO AWS D1.1, E70XX.
2. ALL WELDING SHALL BE DONE BY CERTIFIED WELDERS MEETING THE REQUIREMENTS OF THE BUILDING CODE AND THE CITY OF LOS ANGELES FOR SPECIAL MOMENT RESISTING FRAME "SMF".
3. ALL WELDS SHALL BE PREQUALIFIED IN CONFORMITY WITH THE CODE FOR WELDING IN BUILDING CONSTRUCTION AWS D1.1.
4. COMPLETE PENETRATION GROOVE WELDS USED IN SEISMIC RESISTING FRAMES SHALL BE MADE WITH FILLER METAL THAT HAS A MINIMUM CVN TOUGHNESS OF 20 FT-LBS. AT MINUS 20°F.
5. REMOVE BACK-UP BARS @ BOTTOM FLANGE, BACK GOUGE AND ADD 5/16" FILLET WELD.
6. PROVIDE WELD ACCESS HOLES PER 3 S20.
7. ALL STEEL MEMBERS SHALL BE MADE IN AN APPROVED FABRICATOR'S SHOP. THE APPROVED FABRICATOR SHALL SUBMIT THE CERTIFICATE OF COMPLIANCE TO THE BUILDING INSPECTOR PRIOR TO ERECTION. CBC SECTION 1704.2.2
8. SEE SHEETS S24, S25, S26 FOR SMF REQUIREMENTS.

S20-4 SMF RIGID FRAME WELDING NOTES
4 1" = 1'-0"

BUREAU OF ENGINEERING
OFFICIAL RECORD

BOLT SCHEDULE

BEAM SIZE	BOLTS NO. AND SIZE	REMARKS
W4,W6,W8,W10	2-7/8"□	
W12,W14	3-7/8"□	
W16	4-7/8"□	
W18	5-7/8"□	
W21	6-7/8"□	
W24	7-7/8"□	

NOTES:

1. FOR C AND S SHAPES USE THE SAME SIZE AND NUMBER OF BOLTS AS FOR W SHAPE OF SAME DEPTH.
2. ALL BOLTS SHALL BE A325N U.N.O.

S20-5 RIGID FRAME CONN. SCHED
5 1" = 1'-0"

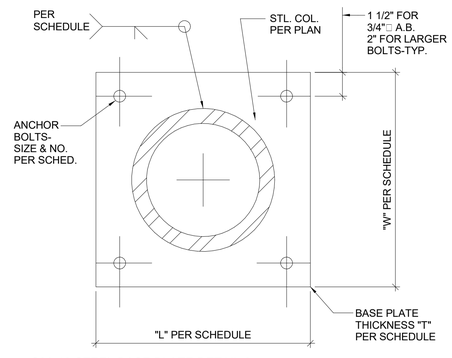

NOTE: DETAIL TYPICAL UNLESS NOTED .

S20-6 TYP. BENT BEAM DETAIL
6 1" = 1'-0"

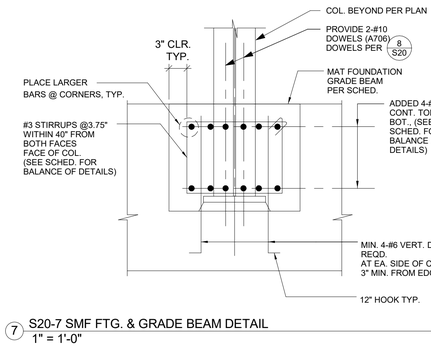

S20-7 SMF FTG. & GRADE BEAM DETAIL
7 1" = 1'-0"

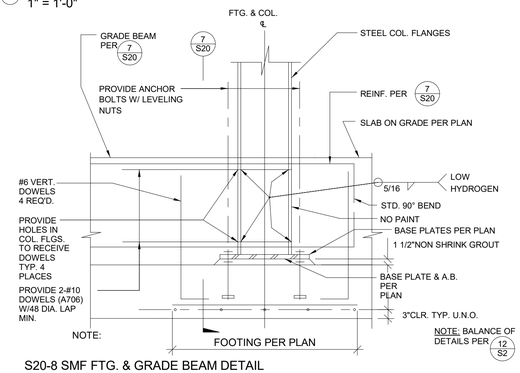

S20-8 SMF FTG. & GRADE BEAM DETAIL AT END COLUMN
8 1" = 1'-0"

COL. NAME SHAPE	MARK	DIMENSIONS-INCHES T	W	L	WELD SIZE	ANCHOR BOLTS NO. & SIZE	DETAIL	REMARKS
W21 (SMF)	A	1-5/8"	1'-9"	2'-7"	1/2"	4-3/4"ø	11 S20	
W14 & W12 (SMF)	B	3/4"	1'-2"	1'-8"	5/16	4-3/4"ø	11 S20	
HSS 10X10 HSS 12X8 HSS 10	C	3/4"	1'-3"	1'-3"	5/16	4-3/4"ø	9 S20 10 S20	
HSS 8X8	D	3/4"	1'-3"	1'-3"	5/16	4-3/4"ø	9 S20	
HSS 6X6	E	5/8"	1'-0"	1'-0"	1/4	4-3/4"ø	9 S20	
HSS 4X4	F	5/8"	0'-10"	0'-10"	1/4	4-3/4"ø	9 S20	

S20-9 STEEL BASE PLATE DETAIL
9 1" = 1'-0"

S20-10 STEEL BASE PLATE DETAIL 2
10 1" = 1'-0"

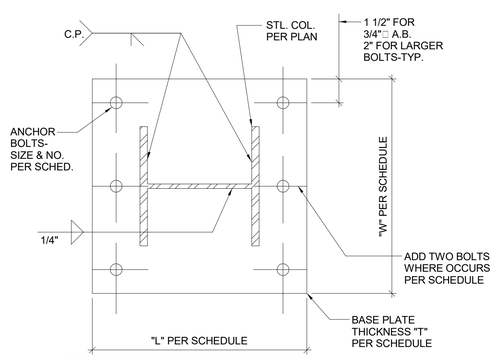

S20-11 STEEL BASE PLATE DETAIL 3
11 1" = 1'-0"

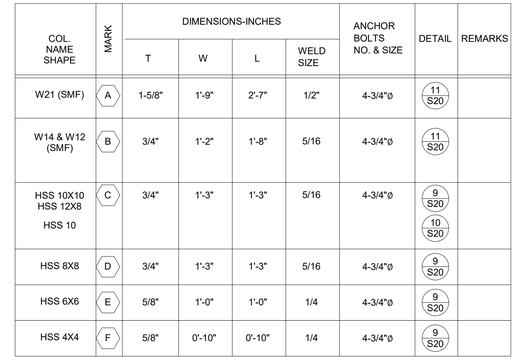

NOTES:
1. SEE FRAMING PLANS FOR MEMBER SIZES.
2. TYP. EXCEPT AS NOTED

S20-12 BASE PLATE SCHEDULE
12 1" = 1'-0"

BOLT SCHEDULE

BEAM SIZE	BOLTS NO. AND SIZE	REMARKS
W4,W6,W8,W10	2-3/4" DIA.	
W12,W14	3-3/4" DIA.	
W16	4-3/4" DIA.	
W18	5-3/4" DIA.	
W21	6-3/4" DIA.	
W24	7-3/4" DIA.	

NOTES:

1. FOR C AND S SHAPES USE THE SAME SIZE AND NUMBER OF BOLTS AS FOR W SHAPE OF SAME DEPTH.
2. ALL BOLTS SHALL BE A325 N U.N.O.

S20-13 STL. BM. CONN. SCHEDULE
13 1" = 1'-0"

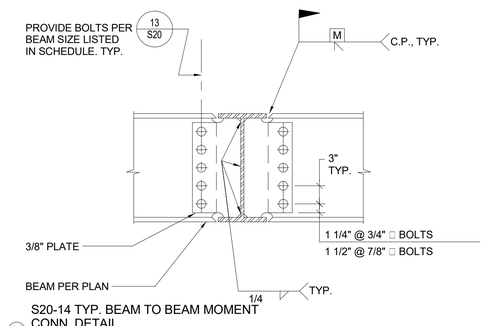

S20-14 TYP. BEAM TO BEAM MOMENT CONN. DETAIL
14 1" = 1'-0"

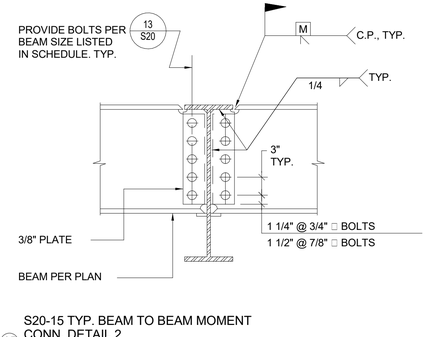

S20-15 TYP. BEAM TO BEAM MOMENT CONN. DETAIL 2
15 1" = 1'-0"

S20-16 BEAM CONN. DETAIL
16 1" = 1'-0"

THE CITY OF LOS ANGELES OR IT'S OFFICERS OR AGENTS SHALL NOT BE RESPONSIBLE FOR THE ACCURACY OR COMPLETENESS OF ELECTRONIC COPIES OF THIS PLAN SHEET.

TTLB TEMPLATE REVISION DATE: 02/2013
SHEET ISSUE DATE: 26 APR 19
FILE PATH: BIM 360://Studio City Recreation Center/SCRC-Structural.rvt

REVISION DATES (DESIGN STAGE ONLY)

BUREAU OF ENGINEERING
CITY OF LOS ANGELES

NO.	REVISION DESCRIPTION	DATE	BY

BUILDING NO. -
INDEX NO. RP-300106

REGISTERED PROFESSIONAL ENGINEER NAST FARIN NO. C-62199 EXP. 09-30-19 CIVIL STATE OF CALIFORNIA

DEPARTMENT OF PUBLIC WORKS
CITY OF LOS ANGELES

TED ALLEN, PE
ARCHITECTURAL DIVISION

		CITY ENGINEER
ENGINEER:	NAST ENTERPRISES CORP. LIC. NO.: C-62199	DATE: 29 APR. 19
DESIGNED BY:	H.N.	29 APR. 19
DRAWN BY:	H.N.	29 APR. 19
CHECKED BY:	H.N.	29 APR. 19
APPROVED BY:	MAHMOOD KARIMZADEH, AIA. DEPUTY CITY ENGINEER	29 APR. 19

ST Enterprises Corp.
554 S San Vicente Blvd., #202, Los Angeles, CA 90048 Tel: (310) 210 - 3238

VERTICAL CONTROL:
HORIZONTAL CONTROL:

SHEET TITLE: TYPICAL STEEL FRAMING DETAILS
PROJECT: STUDIO CITY GYMNASIUM
ADDRESS: 12621 RYE STREET, STUDIO CITY, CA 91604

WORK ORDER NO. Project Number
PLAN FILE NO.
DRAWING NO. S20
SHEET 136 OF SHEETS 211

PLOTTED:4/30/2019 5:28:08 PM

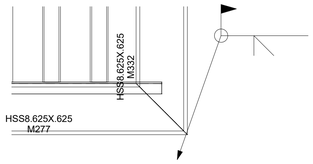

S21-1 CANOPY EDGE CORNER CONN. DETAIL
1" = 1'-0"

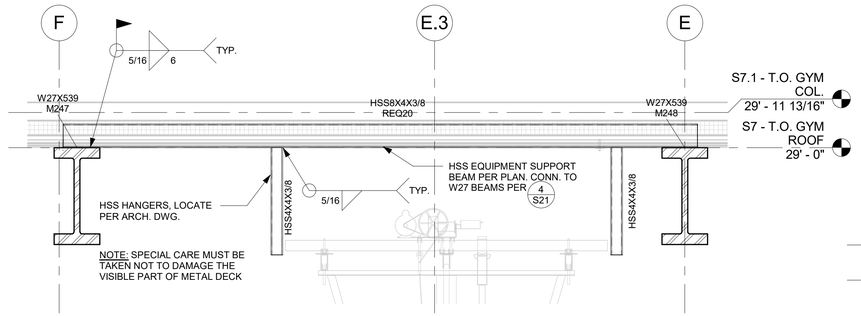

S21-2 BASKETBALL EQUIPMENT HANGER CONN. DETAIL
1/2" = 1'-0"

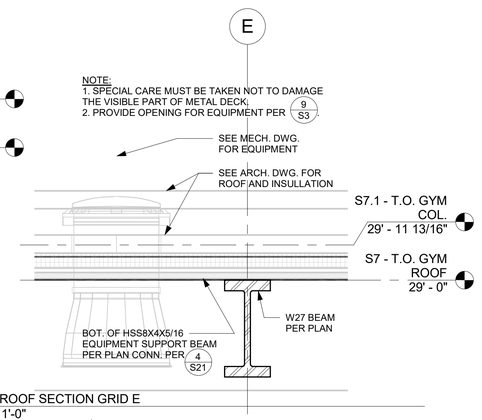

S21-3 ROOF SECTION GRID E
1/2" = 1'-0"

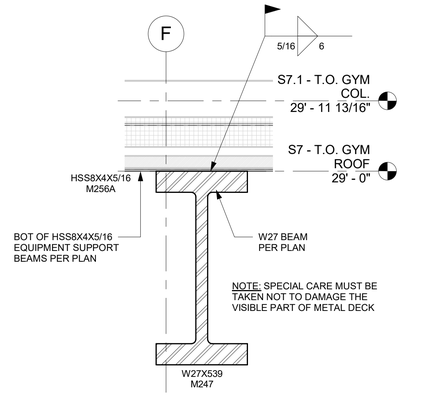

S21-4 ROOF SECTION GRID F
1" = 1'-0"

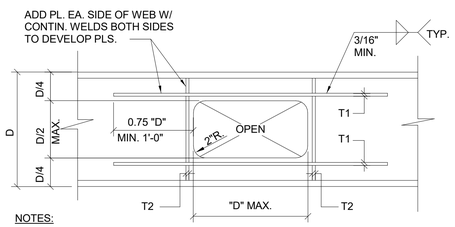

NOTES:

1. OPENINGS AS INDICATED SHALL BE SPACED (5 X D) MINIMUM.
2. T1 = BEAM FLANGE THICKNESS X 0.75
   T2 = BEAM WEB THICKNESS
3. PLACE OPENINGS IN MIDDLE THIRD OF SPAN OR OUTER HALF OF CANTILEVER SPAN.

S21-5 TYP. DETAIL FOR SMALL OPENING
1" = 1'-0"

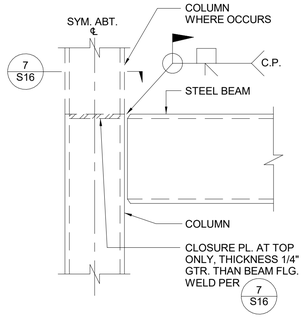

S21-6 BEAM TO COLUMN RIGID CONN.
1" = 1'-0"

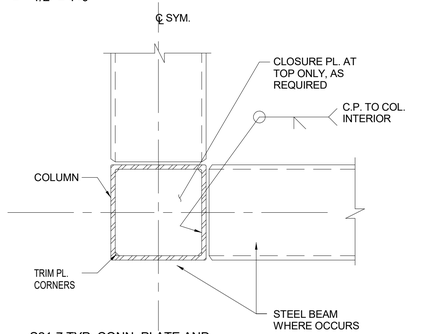

S21-7 TYP. CONN. PLATE AND STIFFENER PLATE DETAIL
1" = 1'-0"

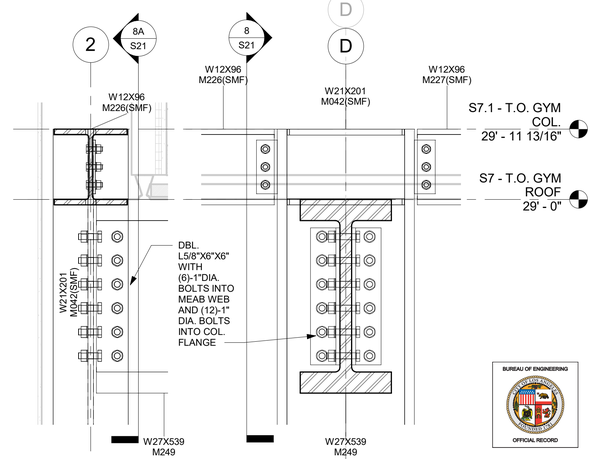

S21-8 ROOF GIRDER SECTION (GRID '2' AS BASIS)
1" = 1'-0"

S21-8A ROOF GIRDER SECTION (GRID 'D' AS BASIS)
1" = 1'-0"

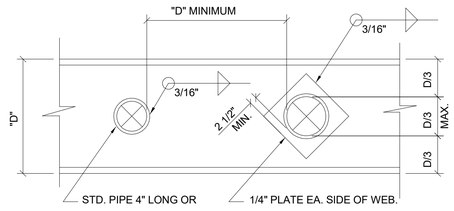

NOTES:

1. PLACE OPENINGS IN MIDDLE THIRD OF SPAN OR OUTER HALF OF CANTILEVER SPAN.

S21-9 TYP. DETAIL FOR OPENING FOR PIPES
1" = 1'-0"

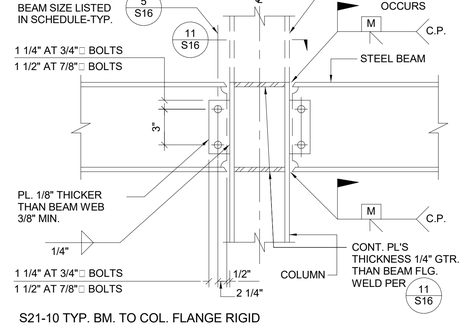

S21-10 TYP. BM. TO COL. FLANGE RIGID CONN.
1" = 1'-0"

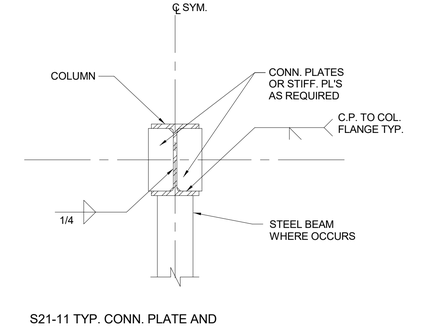

S21-11 TYP. CONN. PLATE AND STIFFENER PLATE DETAIL 2
1" = 1'-0"

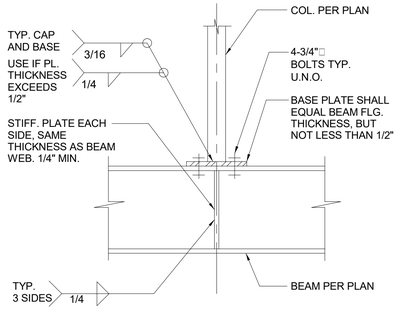

NOTE: BOLTS SHALL BE A307 U.N.O.

S21-12 COL. TO BM. CONN. DETAIL
1" = 1'-0"

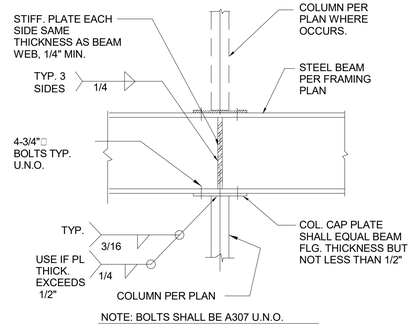

NOTE: BOLTS SHALL BE A307 U.N.O.

S21-13 BEAM TO COLUMN CONN. DETAIL
1" = 1'-0"

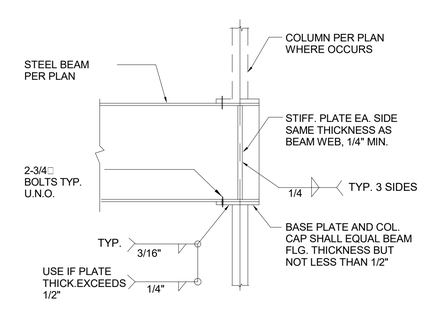

NOTE: BOLTS SHALL BE A307 U.N.O.

S21-14 BEAM TO COLUMN CON.
1" = 1'-0"

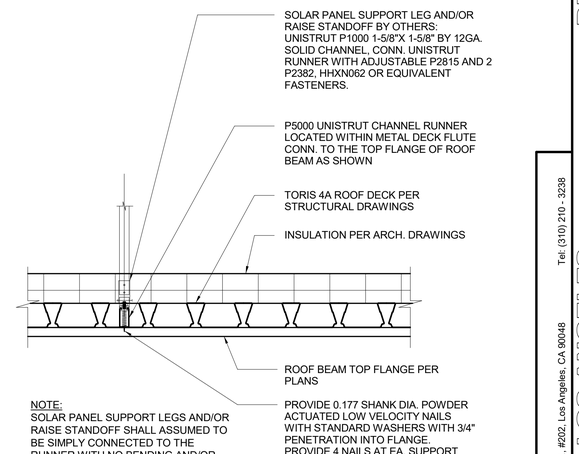

NOTE:
SOLAR PANEL SUPPORT LEGS AND/OR RAISE STANDOFF SHALL ASSUMED TO BE SIMPLY CONNECTED TO THE RUNNER WITH NO BENDING AND/OR ROTATIONAL RIGIDITY.

S21-15 SOLAR SUPPORT DETAIL
1" = 1'-0"

BUREAU OF ENGINEERING
OFFICIAL RECORD

THE CITY OF LOS ANGELES OR ITS OFFICERS OR AGENTS SHALL NOT BE RESPONSIBLE FOR THE ACCURACY OR COMPLETENESS OF ELECTRONIC COPIES OF THIS PLAN SHEET.

FILE PATH: BIM 360://Studio City Recreation Center/SCRC-Structural.rvt

TTLB TEMPLATE REVISION DATE: 02/2013
SHEET ISSUE DATE: 26 APR 19

REVISION DATES (DESIGN STAGE ONLY)

DEPARTMENT OF PUBLIC WORKS
BUREAU OF ENGINEERING
CITY OF LOS ANGELES
ENGINEERING

NO.	REVISION DESCRIPTION	DATE	BY

BUILDING NO. -
INDEX NO. RP-300106

REGISTERED PROFESSIONAL ENGINEER
NASTARIN
No. C-62199
Exp. 09-30-19
CIVIL
STATE OF CALIFORNIA

CITY OF LOS ANGELES
DEPARTMENT OF PUBLIC WORKS
BUREAU OF ENGINEERING

TED ALLEN, PE
ARCHITECTURAL DIVISION

CITY ENGINEER		
DATE:	29 APR 19	
ENGINEER:	NAST ENTERPRISES CORP.	LIC. NO.: C-62199
DESIGNED BY:	H.N.	
DRAWN BY:	H.N.	
CHECKED BY:	H.N.	
APPROVED BY:	MAHMOOD KARIMZADEH, AIA, DEPUTY CITY ENGINEER	29 APR 19

VERTICAL CONTROL:
HORIZONTAL CONTROL:

SHEET TITLE: TYPICAL STEEL FRAMING DETAILS
PROJECT: STUDIO CITY GYMNASIUM
ADDRESS: 12621 RYE STREET, STUDIO CITY, CA 91604

ST Enterprises Corp.
554 S San Vicente Blvd. #202, Los Angeles, CA 90048
Tel: (310) 210 - 3238

WORK ORDER NO.
Project Number
PLAN FILE NO.
DRAWING NO.
S21
SHEET 137 OF SHEETS 211

PLOTTED:4/30/2019 5:28:09 PM

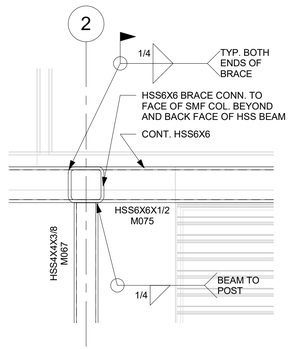

1 S22-1 CONNECTION DETAIL
1" = 1'-0"

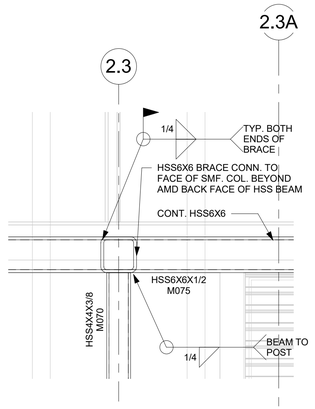

2 S22-2 CONNECTION DETAIL
1" = 1'-0"

THE CITY OF LOS ANGELES OR ITS OFFICERS OR AGENTS SHALL NOT BE RESPONSIBLE FOR THE ACCURACY OR COMPLETENESS OF ELECTRONIC COPIES OF THIS PLAN SHEET.

REVISION DATES
(DESIGN STAGE ONLY)

TTLB TEMPLATE REVISION DATE: 02/2013
SHEET ISSUE DATE: 26 APR 19
FILE PATH: BIM 360://Studio City Recreation Center/SCRC-Structural.rvt

BUREAU OF ENGINEERING
OFFICIAL RECORD

BUREAU OF ENGINEERING
ENGINEERING
CITY OF LOS ANGELES

NO.	REVISION DESCRIPTION	DATE	BY

INDEX NO. RP-300106
BUILDING NO. -

REGISTERED PROFESSIONAL ENGINEER
HOOMAN NASTARIN
NO. C-62199
EXP. 09-30-19
CIVIL
STATE OF CALIFORNIA

DEPARTMENT OF PUBLIC WORKS
TED ALLEN, PE
CITY ENGINEER

		DATE:
	ARCHITECTURAL DIVISION	
ENGINEER:	NAST ENTERPRISES CORP. LIC. NO.: C-62199	29 APR. 19
DESIGNED BY:	H.N.	29 APR. 19
DRAWN BY:	H.N.	29 APR. 19
CHECKED BY:	H.N.	29 APR. 19
APPROVED BY:	MAHMOOD KARIMZADEH, AIA, DEPUTY CITY ENGINEER	29 APR. 19

CITY OF LOS ANGELES
VERTICAL CONTROL:
HORIZONTAL CONTROL:
SHEET TITLE: STEEL FRAMING DETAILS
PROJECT: STUDIO CITY GYMNASIUM
ADDRESS: 12621 RYE STREET, STUDIO CITY, CA 91604

ST Enterprises Corp.
504 S San Vicente Blvd., #202, Los Angeles, CA 90048 Tel: (310) 210 - 3238

WORK ORDER NO.
Project Number
PLAN FILE NO.
DRAWING NO.
S22
SHEET 138 OF SHEETS 211

PLOTTED:4/30/2019 5:26:11 PM

STANDARD QUALITY ASSURANCE PLAN

I. PURPOSE

The Standard Quality Assurance Plan (hereinafter referred to as "Standard QA Plan") for steel moment frames provides specifications, procedures, and illustrative details to comply with the requirements of the 2002 Los Angeles Building Code. The quality assurance requirements described in this Standard QA Plan are intended to promote public safety and welfare by standardizing inspections, tests, and all other applicable measures that ensure substantial compliance with the code performance objectives of steel moment frame connections.

II. HOW TO USE THIS STANDARD QA PLAN

To use the Standard QA Plan, follow the steps outlined below:

1. *Standard QA Plan shall be attached to or incorporated in the structural plan.*
2. *Where the Standard QA Plan is attached to the structural plan, the Engineer of Record shall:*
   a. *Identify the type of steel moment frame to be used in the building or structure by placing an "X" mark in the box below:*

      SPECIAL MOMENT FRAME (SMF)

      INTERMEDIATE MOMENT FRAME (IMF)

      ORDINARY MOMENT FRAME (OMF)

   b. *Place a NOTE on the structural plan stating "All specifications, tables, and notes in the City of Los Angeles' Standard Quality Assurance Plan for Steel Moment Frames shall be part of this approved structural plan."*
   c. *Sign and stamp the Standard QA Plan in the box provided at the lower right corner of each sheet.*
3. *Where the Standard QA Plan is incorporated directly in the structural plan, the Engineer of Record shall place a NOTE on the structural plan to clearly indicate the type of steel moment frame to be used in the building or structure.*
4. *All of the quality assurance requirements listed in the Standard QA Plan shall be applied to special moment frames, intermediate moment frames, and ordinary moment frames, unless noted otherwise herein.*
5. *Organize and submit all reports required in Table 1 on Sheet 2 to the City Building Inspector in a timely manner for review and approval.*
6. *The procedures, specifications and illustrative details as described in the Standard QA Plan shall not exempt the Engineer of Record from using engineering judgment in determining the suitability of applying the Standard QA Plan to any welded connections. Any deviations in the quality assurance requirement as specified in the Standard QA Plan shall comply with Part III Item 5 of the Standard QA Plan.*

III. GENERAL REQUIREMENTS

1. Referenced Documents
The design and construction of steel moment frames shall be in compliance with the following:
a. City of Los Angeles Building Code, 2002 Edition (hereinafter referred to as "LABC").
b. AISC Seismic Provisions for Structural Steel Buildings, Part I and Part III, dated May 21, 2002 (hereinafter referred to as "AISC Seismic").
c. AWS D1.1/D1.1M:2002 Structural Welding Code - Steel (hereinafter referred to as "AWS").

2. Material Specifications
a. Structural steel shall comply with UBC Standard 22-1 and the following ASTM standard specifications:
   i. Wide flange shapes.....ASTM A572 (50), A913 (50), A992
   ii. Continuity, doubler and column base plates, shear tabs....ASTM A36
   iii. Anchor bolts at column base plates.....ASTM F1554
   iv. Fabricate and erect structural steel in compliance with either the 2001 Edition of AISC "Load and Resistance Factor Design Specification for Structural Steel Buildings" (hereinafter referred to as "AISC LRFD Specification") or 1989 Edition of the AISC "Allowable Stess Design Specification for Structural Steel Buildings" (hereinafter referred to as "AISC ASD Specification").
   v. Steel having dual ASTM designation shall be clearly identified on each specific plan detail.
b. High strength bolts shall comply with the following requirements and ASTM standard specifications:
   i. High strength bolts, nuts, and washers.....ASTM A325, A490
   ii. Installed bolts in accordance with the "Specifications for Structural Joints using ASTM A325 or A490 Bolts."
   iii. Tighten bolts to a snug tight condition that is at least the minimum proper tension and verify using a calibrated tension measuring device.
   iv. Slip critical high strength bolts are required.
   v. All faying surfaces of connections with high strength fasteners shall be prepared as required for Class A per the AISC Seismic Section 7.2.
c. Filler metal properties and specifications shall be as follows:
   i. Electrodes shall be of a low-hydrogen type conforming to AWS specifications as referenced in Table 7 on Sheet 2.
   ii. Filler metals shall be classified for nominal 70 ksi tensile strength.
   iii. The maximum permitted electrode diameter shall be in accordance with Table 5 on Sheet 2.
   iv. Filler metals shall have a minimum Charpy V-Notch (CVN) toughness of 20 ft-lbf at -20°F using AWS A5 classification test methods.
   v. The use of intermixed welds shall not occur unless it can be demonstrated by testing in accordance with AWS Section 4.
   vi. The parameters established by the electrode manufacturer shall be reflected in the approved WPS.
d. Other materials not listed in UBC Standard 22-1 or LABC Chapter 35 are not permitted without specific approval from the Department.

3. Welding Processes
Structural welding shall be limited to the Shielded Metal Arc Welding or Flux Cored Arc Welding processes.

4. Base Metal Repairs or Restorations
Any repair or restoration of base metal shall comply with all of the following:
a. Engineer of Record shall review and approve the WPS for repair procedures prior to welding.
b. Ensure that repair procedures meet the requirements outlined in AWS Section 5.26 and ASTM A6/A6M-02 Section 9.2, 9.3, 9.4 and 9.5.
c. All welding shall be performed using low-hydrogen process or with SMAW using low-hydrogen electrodes.
d. Provide continuous visual inspection by the Deputy Inspector.
e. Provide non-destructive testing upon completion of the repair work.

5. Deviations From the Standard Quality Assurance Plan
Deviations from any part of the Standard QA Plan may be made provided the procedures outlined below are followed:
a. Deviations from the Standard QA Plan must be reviewed and approved by the Engineer of Record.
b. Engineer of Record shall provide alternate procedures, specifications, and/or details to justify the deviations.
c. Submit the proposed deviations from the Standard QA Plan to the Department for review and approval prior to commencement of work.
d. Supplemental testing and additional specifications may be required to justify the deviation.
e. Conformance with all applicable provisions of the LABC, AISC, and AWS is required.

IV. QUALITY ASSURANCE

1. Certification
a. Inspectors shall be LADBS Certified Deputy Inspectors per LABC Section 1701.2 and Information Bulletin P/BC 2002-035 "Regulations Regarding Registration for Deputy and Controlled Activities Inspection." Employment shall be in accordance with Information Bulletin P/BC 2002-034 "Employment and Duties of a Registered Deputy Inspector."
b. Welders shall be LADBS Certified Welders for the Structural Steel classification per LABC Section 1701.18.1, 2205.10, and Information Bulletin P/BC 2002-045 "Welder Certification Rules and Regulations."
c. Shop welds shall be performed in an LADBS Certified Fabricator's Shop per LAMC Section 96.204(g) and Information Bulletin P/BC 2002-042 "Application for Approval as Fabricator."
d. Technicians performing Non Destructive Testing (NDT) shall be certified for Level II in accordance with ASNT SNT-TC-1A 2002 Edition by a Testing Agency approved per LAMC Section 98.0503 and Information Bulletin P/BC 2002-058 "Guidelines for Recognition of Testing Agencies."

2. Pre-Construction Meeting
a. The Owner (or owner's representative) shall arrange a pre-construction meeting(s) with the Engineer of Record (or Structural Observer designated by the Engineer of Record), the Contractor (or affected Sub-Contractor), and the Deputy Inspector to discuss and review welding procedures, bolting procedures, and inspection requirements for all welding and bolting operations.
b. The City Building Inspector shall be notified of such meeting(s) and may participate at his/her discretion.
c. Meeting record(s) shall be included in the first report submitted to the City Building Inspector.

3. Structural Observation
Structural observation shall be performed in accordance with Information Bulletin P/BC 2002-024. The Structural Observer shall:
a. Perform structural observation listed in Table 6 on Sheet 2.
b. Perform structural observation prior to placement of decking, covering by fireproofing, encasement in concrete or placement of other finishes.
c. Submit observation report(s) to the City Building Inspector at each stage observed and upon completion of the structural system.
d. State in the report that the steel moment frame system substantially conforms with the approved structural plans and specifications.
e. Use the Department's Structural Observation Report Form to report all observations. Structural Observation Report Form can be obtained at www.ladbs.org, keyword "Information Bulletin P/BC 2002-024".

4. Deputy Inspection
The following are the basic Quality Assurance responsibilities of the Deputy Inspectors:
a. Arrive on the job in sufficient time to verify the permit information, check for prior inspections and/or approvals by the City Building Inspector or previous Deputy Inspectors, check the quality of all materials and become familiar with the approved structural plans and specifications.
b. Verify that structural steel delivered is from a fabricator currently licensed by the Department.
c. Identify material from an offsite fabricator in accordance with LABC Section 2203 and compare to the approved plans and specifications.
d. Verify that each steel piece is labeled with the approved fabricator's shop name and license number.
e. Visual check shop welds, joint preparation, faying surfaces, indentation stamps and color codes of high strength steel, excessive mill scale or lamination, and dimensional conformity with the approved plans.
f. Before any welding begins, inspect joint preparation, fit-up, condition of surfaces to be welded, storage and use of electrodes, current license of all welders, and voltage/amperage of welding machines.
g. Ensure that all welding and inspection activities complies with AWS.
h. Measure voltage/amperages near the arc with a hand held calibrated averaging type meter. The meter shall be calibrated not less than once a year. This equipment shall be used by the Fabricator, Erector, and Deputy Inspector.
i. During welding operation, provide continuous inspection particularly on multiple pass welds to assure that each pass has been prepared correctly, preheat and interpass temperatures are maintained and that finished welds shall be the correct size and without rejectable discontinuities.
j. Mark steel near the weldment to indicate that inspection was made.
k. Verify type and size of bolts and washers, check mill certificates, and verify faying surfaces are free of burrs, scale, rust, grease or anything that may inhibit full contact.
l. Verify connections involving high strength bolts and welds are fabricated per Part III Item 2(b) and 2(c) and erected in a sequence per Part V Item 2, unless specified otherwise by the Engineer of Record.
m. Verify high strength bolts are not welded or damaged by preheating.
n. Verify washers are always installed with all bolts, except A-490 bolts which require washers under both elements.
o. Verify that any deficiency noted in the Structural Observation Report Form has been corrected.
p. Verify that the Engineer of Record has approved the written Welding Procedure Specification (WPS) prepared by the Fabricator or Erector. The WPS shall include the following:
   i. All applicable requirements from the codes, the Standard QA Plan, and any other information necessary to produce the welds.
   ii. List the applicable base metal types and thicknesses.
   iii. List the welding joint detail, including joint type, weld type, joint geometry, and applicable dimensions. Individual weld passes shall be identified in sketches and numbered to identify the sequence of their deposition (see Detail 13 on Sheet 3 for example). The sketches shall identify the maximum layer thicknesses and bead widths. In no case shall layer thicknesses exceed 1/4 inch nor shall the maximum bead widths exceed 5/8 inch.
   iv. List the welding processes.
   v. Specify the required welding positions.
   vi. List the filler metal per AWS for electrode specification and classification (see Table 7 on Sheet 2), as well as information regarding shielding material to be used.
   vii. Indicate the minimum preheat and interpass temperatures (see Table 4 on Sheet 2) and post weld heat treatment per Part V Item 5.
   viii. List all applicable electrical characteristics for the welding process employed. WPS shall clearly indicate the specific values required for each welding pass. These electrical characteristics shall include at minimum the following:
      (1) Electrode diameter (see Table 5 on Sheet 2),
      (2) Type of current, and acceptable ranges of current measured in amperage,
      (3) Voltage,
      (4) Travel speed (range), and
      (5) Amperage, voltage and electrode extension (as applicable) shall be within the filler metal manufacturer's recommendations.
   ix. A copy of the electrode manufacturer's technical information with ID # listed shall be attached to the WPS .
q. Weld joints not conforming to AWS Chapter 3 must be tested by an approved testing agency, accepted by the Engineer of Record, and approved by the Department's Material Control Section before the weld is performed. Material Control Section can be contacted at:

   LADBS Material Control Section
   221 N. Figueroa St., Suite 1540
   Los Angeles, CA 90012
   (213) 482-0380 or 1-888-LA-4BUILD

r. Notify the Contractor, Engineer of Record, and City Building Inspector of any deviations or non-compliance with the approved WPS, plans or specifications.
s. "Deputy Inspection Report Form B-94" shall be submitted on a weekly basis to the City Building Inspector and Engineer of Record, unless determined otherwise by the City Building Inspector.
t. During the execution of the work, the Deputy Inspector shall not undertake or engage in any other task or occupation which will interfere with the proper performance of the duties of such inspection.

5. Electrode Storage and Atmospheric Exposure
a. Electrodes are considered to be exposed to the atmoshpere if:
   i. the manufacturer's sealed electrode containers or packagings are opened or damaged, or
   ii. outside of baking or storage ovens.
b. Modification or lubrication of electrodes are not permitted.
c. Drying of electrodes in baking or storage ovens are permitted as recommended by the manufacturer.
d. Electrodes shall be identified to facilitate monitoring of total atmospheric exposure time.
e. Storage and atmospheric exposure of AWS A5.1-91 and A5.5-96 low-hydrogen SMAW electrodes shall be in accordance with AWS Section 5.3.2.
f. FCAW electrodes not consumed within 24 hrs of accumulated atmospheric exposure time shall not be used. Manufacturer's recommendations that show that drying effectively removes moisture and restores electrodes to their designated diffusible hydrogen levels are permitted.
g. FCAW electrode welding suspended more than 8 hrs shall be removed from the machines and stored in an electrode wire baking or storage oven maintained at a temperature between 250° and 550°F, or as recommended by the electrode manufacturer.

6. Plastic Hinging Zone Protection
a. The plastic hinging zone shall be identified diagrammatically, as illustrated in Detail 15 on Sheet 3, on the structural plans by the Engineer of Record.
b. The Engineer of Record and Contractor shall be responsible for reviewing shop drawings of ALL relevant trades to ensure compliance. This shall be discussed and documented in pre-construction meetings.
c. The Contractor shall be responsible for developing a program to ensure that all workers on the project, including their subcontractors, are aware of and understand this requirement. Failure to comply with these requirements may cause the replacement of steel.
d. Plastic hinging zones shall be defined by permanent markings such as paint or ink.
e. A note, as illustrated in Detail 15 on Sheet 3, shall be prominently placed on the structural plans (general note sheet and adjacent to moment frame detail) and the construction documents of ALL trades.
f. Welded, bolted, screwed, or shot-in (powder driven) attachments for perimeter edge angles, shear studs, exterior facades, partitions, duct work, piping, or other connections shall not be permitted within the plastic hinging zones.
g. Any penetrations or damage from temporary welded attachments within the plastic hinging zones shall be repaired as required by the Engineer of Record and comply with Part III Item 4.
h. Initially, the plastic hinging zone "Warning Sign", as illustrated in Detail 15 on Sheet 3, may be temporary. However, the temporary "Warning Sign" shall be replaced by a permanent "Warning Sign" before project completion. This sign and identification of the plastic hinging zone shall be maintained during construction; and may require repair after operations such as fireproofing.
i. Signs shall be affixed to the beam and located within the plastic hinging zone. The City Building Inspector may accept alternate methods of attaching the "Warning Sign" to the plastic hinging zones.

7. Additional Charpy V-Notch Toughness (not required for OMF)
Welds at the locations indicated below shall be made with filler metal having a CVN toughness of 20 ft-lbf at -20°F AND 40 ft-lbf at 70°F as determined by test procedure prescribed in the AISC Seismic Appendix X "Weld Metal / Welding Procedure Specification Toughness Verification Test."
a. Beam flanges to columns,
b. Single plate shear connections to columns,
c. Beam webs to columns, and
d. Column splices.

8. Non-Destructive Testing (NDT) Requirements
a. The minimum non-destructive testing at each weld joints or parts shall be conducted at the locations and frequencies as specified in Table 2 and Table 3 on Sheet 2 respectively.
b. A copy of each NDT report shall be provided to the Contractor, Engineer of Record, Deputy Inspector, and City Building Inspector with the following information:
   i. Document the accepted and rejected welds, parts, or joints.
   ii. Identify the tested weld by piece mark and location in the piece.
   iii. Identify the tested weld location in the structure.
c. NDT Technician shall perform the following tasks:
   i. Coordinate the NDT scope and schedule with the Deputy Inspector.
   ii. Perform NDT in a timely manner (so as not to hinder construction work) and to detect welding problems soon after occurrence so that corrective measures can be taken by the Contractor.
   iii. Mark the inspected and accepted welds, parts, and joints with a distingquishing mark or die stamp.
d. Reduction Rate for NDT
   i. The rate of UT testing on CJP groove welds may be reduced if approved by the Engineer of Record and the Department. The NDT rate for an individual welder or welding operator may be reduced to 25%, provided the reject rate is demonstrated to be 5% or less of the welds tested for the welder or welding operator. A sampling of at least 40 completed welds for a job shall be made for such reduction evaluation.
   ii. The rate of MT testing on CJP groove welds may be reduced if approved by the Engineer of Record and the Department. The MT rate for an individual welder or welding operator may be reduced to 10%, provided the reject rate is demonstrated to be 5% or less of the welds tested for the welder or welding operator. A sampling of at least 20 completed welds for a job shall be made for such a reduction evaluation. This reduction is not permitted on welds in the k-area, at repair sites, weld tab and backing removal sites and access holes.
   iii. Reject rate shall mean the number of welds containing rejectable defects divided by the number of welds completed.

9. Documentations
The reports listed in Table 1 on Sheet 2 shall be submitted to the City Building Inspector in a timely manner.

V. WELDING PROCEDURES

1. Bottom Beam Flange Moment Connection Welding
Where welding of the bottom beam flange to the column flange is in the flat welding position, welding shall be completed with the following sequence:
a. Start welding from Side A (one side of the beam) with a maximum 1/4 inch thick root pass beyond the center of the joint on Side B (other side of the beam), reaching past the beam web through the weld access hole.
b. After the arc is initiated, electrode travel shall progress toward the edge of the Side A beam flange, terminating on the Side A weld tab.
c. The Side A root pass, and the root pass deposit on Side B, shall be thoroughly cleaned to allow the Deputy Inspector to verify that the resulting bead profile is suitable for obtaining good fusion by the subsequent root pass to be initiated from Side B. If the profile is not conducive to good fusion, the start of the first root pass shall be grounded, gouged, chipped, or otherwise prepared to ensure adequate profile to achieve fusion.
d. Complete the root pass on Side B before any other weld passes are performed.
e. The arc shall be initiated at the start of the first Side A root pass, and electrode travel shall progress toward the edge of the Side B beam flange, terminating on the Side B weld tab.
f. The above sequence shall be repeated for subsequent weld layers, and each weld layer shall be completed on both sides of the joint before a new layer is deposited. The order of operations (Side A, then Side B, or vice versa) is not restricted and may vary for each weld layer. Weld passes shall be placed in horizontal layers. Each pass shall be thoroughly cleaned of slag and wire brushed. Each pass shall be visually inspected by the Deputy Inspector, as described above in Step (c).

An alternate welding sequence may be made provided the Welder or Contractor submits in writing an alternate sequence that is approved by the Engineer of Record and complies with the requirements of Part III Item 5 of the Standard QA Plan.

2. Sequence for Welding at Multiple Locations
When welding occur at multiple locations of welded steel moment frame connections, the following sequence shall be followed:
a. Weld both top and bottom beam flanges prior to any supplemental welding to the beam web or shear tab.
b. Engineer of Record shall review and approve all field welding sequences prior to the start of work.
c. Field welding of web shear plates with bolts shall occur after field welding of beam flanges to column flange.
d. High strength bolts shall be in the snug tight condition prior to welding.
e. Notwithstanding AISC LRFD Specification Section J1.9 to the contrary, high strength bolts shall be fully tensioned upon completion of all welding activities.

3. Welding Technique
a. Stringer beads shall be used during all welding operations. Maximum bead width, bead thickness, and layer thickness shall be considered. Weaving is not permitted, except when the WPS approved by the Engineer of Record limits electrode oscillation transverse to the weld axis to a maximum of:
   i. 3d for 1G/1F, 2G/2F, and 4G/4F weld positions, or
   ii. 5d for the 3G/3f position, where d = electrode diameter.
b. Welding layers should progress from the face of the column flange outward toward the groove face of the beam flange as illustrated in Detail 13 on Sheet 3.

4. Preheat and Interpass Temperature
a. The minimum preheat and interpass temperature requirements in Table 4 of Sheet 2 shall be observed. Special attention shall be given to AWS Section 3.5.1 and Section 5.6 for the thickness of the base metal to be welded.
b. Preheat and all subsequent interpass temperatures shall be maintained during the welding operation for a distance at least equal to the thickness of the thicker welded part, but not less than 3", in all directions from the point of welding.
c. Where base metals are of different thickness, the higher minimum preheat and interpass temperature requirements of the thicker plate shall govern.
d. Maximum preheat and interpass temperature shall not exceed the lesser of:
   i. 550°F, or
   ii. The maximum temperature recommended by the manufacturer.

5. Post Weld Heat Treatment
Unless specified otherwise in an approved WPS, the minimum post weld heat treatment shall be provided as follows:
a. Apply temperature in the 400°F to 600°F range immediately after completion of welding to prevent the weld metal from cooling below the minimum preheat and interpass temperature.
b. Maintain temperature for approximately 1 hour per inch of thickness of weld metal or 2 hours, whichever is less.
c. Conditions specified in AWS Section 3.14 and Section 5.8 should carefully be considered when applying post weld heat treatment.

Alternatively, the use of insulating blankets after the completion of welding in lieu of post weld heat treatment may be permitted to control the cooling of the welded connection to ambient temperature if recommended by the Engineer of Record and approved by the City Building Inspector; unless required otherwise by an approved WPS.

VI. WELDING AND FABRICATION DETAILS

1. Base Metal Joint Preparation
a. Base metal preparation shall be in comply with AWS Section 5.15.
b. All beam flange to column flange welds are to be made with an AWS prequalified CJP groove welded joint detail.
c. Bevel, fit-up and detail tolerances shall be as required by the selected prequalified welded joint detail.
d. Whenever possible, use the AWS prequalified CJP groove welded joint detail as illustrated in Detail 14 on Sheet 3 and the following:
   i. Use single bevel CJP groove welds made with a 30° groove angle or double bevel CJP groove welds when flange thickness exceed 1-1/2 inch.
   ii. "As Fit-Up" and "As Detailed" shall be the maximum tolerances.
   iii. Meet all prequalified WPS variables in Table 5 on Sheet 2.

2. Weld Access Hole
a. Where weld access holes are provided, they shall be detailed as illustrated in Detail 12 on Sheet 3.
b. Notches and gouges shall be repaired following a WPS approved by ther Engineer of Record.
c. Weld access holes shall be prepared by grinding to a suitable finish in accordance with AISC LRFD Specification Section J1.6 and provided with a minimum radius of 3/8 inch as illustrated in Detail 12 on Sheet 3.

3. Backing Bar
a. Backing bar used in connections with a CJP groove weld of beam flange to column flange shall be removed except that top flange backing bar attached to the column by a continuous fillet weld on the edge below thee CJP groove weld need not be removed.
b. Following removal of backing bar, the root pass shall be backgouged to sound weld metal, and back welded. A reinforcing fillet weld with a minimum leg size of 5/16 inch or the root opening plus 1/16 inch, whichever is larger, shall be provided. The reinforcing fillet weld need not be grounded.
c. When backing bar is other than AWS Table 3.1 and Section 5.2.2 approved base metal is used, the following shall apply:
   i. Ceramic, flux or glass tape may be used provided the manufacture's recommendations are followed.
   ii. When a non-metallic backing bar is used, the WPS and the Welder shall be qualifed using the type of backing bar intended for welding.
   iii. Nonferrous metallic (e.g. copper) backing materials are not permitted.

4. Weld Tab
a. Weld tabs shall be aligned parallel to the joint preparation.
b. No weld dams are allowed.
c. Weld tabs shall extend beyond the edge of the joint a minimum distance equal to the part thickness, but not less than one inch.
d. Weld tab shall be removed upon completion of the welded joint as follows:
   i. No more than 1/8 inch beyond the edge of the joint shall remain, except at continuity plate where up to 1/4 inch is acceptable.
   ii. Edges of the weld tab shall be finished to a surface roughness value of 500 micro inch or better. Grinding to a flush condition is not required.

BUREAU OF ENGINEERING
OFFICIAL RECORD

THE CITY OF LOS ANGELES OR ITS OFFICERS OR AGENTS SHALL NOT BE RESPONSIBLE FOR THE ACCURACY OR COMPLETENESS OF ELECTRONIC COPIES OF THIS PLAN SHEET.

TTLB TEMPLATE REVISION DATE: 02/2013
SHEET ISSUE DATE: 26.APR.19
FILE PATH: BIM 360://Studio City Recreation Center/SCRC-Structural.rvt

REVISION DATES (DESIGN STAGE ONLY)

BUREAU OF ENGINEERING
CITY OF LOS ANGELES

NO.	REVISION DESCRIPTION	DATE	BY

BUILDING NO. -
INDEX NO. RP-300106

REGISTERED PROFESSIONAL ENGINEER
MAHMOOD KARIMZADEH
No. C-62199
Exp. 09-30-19
CIVIL
STATE OF CALIFORNIA

DEPARTMENT OF PUBLIC WORKS
CITY OF LOS ANGELES

TED ALLEN, PE
ARCHITECTURAL DIVISION

		DATE:
CITY ENGINEER		29.APR.19
ENGINEER:	NAST ENTERPRISES CORP. LIC. NO.: C-62199	29.APR.19
DESIGNED BY:	H.N.	29.APR.19
DRAWN BY:	H.N.	29.APR.19
CHECKED BY:	H.N.	29.APR.19
APPROVED BY:	MAHMOOD KARIMZADEH, AIA, DEPUTY CITY ENGINEER	29.APR.19

ST Enterprises Corp.
554 S San Vicente Blvd., #202, Los Angeles, CA 90048 Tel: (310) 210 - 3238

VERTICAL CONTROL:
HORIZONTAL CONTROL:

SHEET TITLE: SMF QA Standard Plan Sht 1 of 3

PROJECT: STUDIO CITY GYMNASIUM

ADDRESS: 12621 RYE STREET, STUDIO CITY, CA 91604

WORK ORDER NO.
Project Number
PLAN FILE NO.
DRAWING NO.
S24
SHEET 139 OF SHEETS 211

PLOTTED:4/30/2019 5:28:12 PM

CONTINUED FROM SHEET 1

e. Gouges and notches are not permitted. The transitional slope of any area where gouges and notches have been removed shall not exceed 1:5.
f. Material removed by grinding that extends more than 1/16 inch below the surface of the base metal shall be filled with weld metal. The contour of the weld at the ends shall provide a smooth transition, free of notches and sharp corners.

5. Continuity Plate
a. Continuity plates shall be detailed as illustrated in Detail 11 on Sheet 3.
b. The weld attaching the continuity plate to the column flange shall be as follows:
i. Use a CJP groove weld for the full length of the groove preparation.
ii. When backing bars are omitted, the root shall be backgouged and back welded.
iii. When backing bars are used and remain in place, backing bars shall be attached to the column flanges with a reinforcing fillet weld.
iv. Fillet weld shall not be used to connect backing bars to continuity plates.
v. The fillet weld size need not exceed the minimum size requirements of AWS Table 5.8.
c. Weld terminations near the end of the column flange tips may be completed using weld tabs as follows:
i. Weld tabs may be steel or nonfusible material.
ii. Weld terminations near the radius of the column need not be made using weld tabs. The use of small nonfusible weld tabs to assist in weld terminations is permitted.
iii. Weld tabs shall be removed following completion of welding.
d. Continuity plates may be welded to the column web with groove welds, fillet welds, or a combination of the two. Fillet welds shall terminate a minimum distance of 1/4 inch from each end of the joint.

6. Doubler Plate
Web doubler plates, as illustrated in Detail 2, 3, or 4 on Sheet 3, shall be welded using either Detail 5, 6, or 7 on Sheet 3.

7. Requirements for "k" Area
Welds shall terminate short of the "k" area for continuity plates as illustrated in Detail 11 on Sheet 3.

VII. EXEMPTIONS

1. Reduction from certain quality assurance components of this Standard QA Plan, as listed in Part VII Item 2, are permitted for the following buildings or structures:
a. One or two family dwellings not more than 1 story in height and 2,500 sf of floor area,
b. Buildings or structures accessory to residential uses (such as carport, storage, garage), and
c. Miscellaneous structures (such as walkway, canopy, patio cover, gazebo, storage rack).

2. Buildings or structures, as listed in Part VII Item 1, are exempt from providing the following quality assurance components:
a. Electrode Storage and Atmospheric Exposure, Part IV Item 5(f) and 5(g).
b. Plastic Hinging Zone Protection, Part IV Item 6.
c. Additional CVN Notch Toughness Testing, Part IV Item 7.
d. Non-Destructive Testing, Part IV Item 8.
e. Preheat and Interpass Temperature, Part V Item 4.
f. Post Weld Heat Treatment, Part V Item 5.

Table 7. PREQUALIFIED BASE METAL - FILLER METAL COMBINATIONS FOR MATCHING STRENGTH (1, 2, 3, 4)

BASE METAL		FILLER METAL		
Group	Steel Specification	Welding Process	AWS Electrode Specification	Electrode Classification
I	ASTM A36 < 3/4 in.	SMAW	A5.1	E70XX
			A5.5 (6)	E70XX-X
		FCAW	A5.20 (5)	E70XT-X, E7XT-XM
			A5.29 (6)	E70XTX-X, E7XTX-XM
II	ASTM A36 ≥ 3/4 in. ASTM A572 Grade 50 ASTM A913 Grade 50 ASTM A992	SMAW	A5.1	E7015, E7016, E7018, E7028
			A5.5 (6)	E70XX-X
		FCAW	A5.20 (5)	E70XT-X, E7XT-XM
			A5.29 (6)	E70XTX-X, E7XTX-XM

RELATIONSHIP	BASE METAL(S)	FILLER METAL STRENGTH RELATIONSHIP REQUIRED
Matching	Any steel to itself or any steel to another in the same group	Any filler metal listed in the same group
	Any steel in one group to any steel in another	Any filler metal listed for a lower strength group [SMAW electrodes shall be the low-hydrogen classification]
Under-Matching	Any steel to any steel to any group	

NOTES:
1. The base metal/filler metal strength relationships above shall be used to determine whether matching or under-matching filler metals are required. Refer to AWS D1.1/D1.1M:2002, Section 3.3.
2. Preheating of joints involving base metals of different groups shall be in conformance with the requirements applicable to the higher strength group.
3. When welds are to be stress-relieved, the deposited weld metal shall not exceed 0.05 percent vanadium.
4. Adapted with permission from the AWS D1.1 Committee on Structural Welding, Structural Welding Code - Steel, AWS D1.1/D1.1M: 2002, Miami: American Welding Society, Table 3.1.
5. FCAW electrodes with the -2, -2M, -3, -4, -7, -10, -11, -13, -14, G, -GS suffix shall be excluded and electrodes with the -11 suffix shall be excluded for thicknesses greater than 1/2 in.
6. Filler metals of alloy group B3, B3L, B4, B4L, B5, B5L, B6, B6L, B7, B7L, B8, B8L, B9, or any BXH grade in AWS A5.5 or A5.29 are not prequalified for use in the as-weld condition.

Table 5. PREQUALIFIED WPS REQUIREMENTS (1, 2, 3)

VARIABLE	POSITION OF WELD	WELD TYPE	SMAW	FCAW
Maximum Electrode Diameter	Flat (F)	Fillet (4)	5/16 in.	1/8 in.
		Groove (4)	1/4 in.	
		Root Pass	3/16 in.	
	Horizontal (H)	Fillet	1/4 in.	1/8 in.
		Groove	3/16 in.	
	Vertical (V)	All	3/16 in.	3/32 in.
	Overhead (OH)	All	3/16 in.	5/64 in.
Maximum Current	All	Fillet	Within the range of recommended operation by the filler metal manufacturer and a WPS approved by engineer of record.	Within the range of recommended operation by the filler metal manufacturer and a WPS approved by engineer of record.
	All	Groove weld root pass with opening		
		Groove weld root pass without opening		
		Groove weld fill passes		
		Groove weld cap pass		
Maximum Root Pass Thickness (5)	Flat (F)	All	3/8 in.	3/8 in.
	Horizontal (H)		5/16 in.	5/16 in.
	Vertical (V)		1/2 in.	1/2 in.
	Overhead (OH)		5/16 in.	5/16 in.
Maximum Fill Pass Thickness	All	All	3/16 in.	1/4 in.
Maximum Single Pass Fillet Weld Size	Flat (F)	Fillet	3/8 in.	1/2 in.
	Horizontal (H)		5/16 in.	3/8 in.
	Vertical (V)		1/2 in.	1/2 in.
	Overhead (OH)		5/16 in.	5/16 in.
Maximum Single Pass Layer Width	All	Root opening >1/2 in.	Not applicable.	Split layers
		Any layer of width w		(6)

NOTES:
1. Applicable provisions of AWS D1.1/D1.1M:2002 Section 3 "Prequalification of WPSs" must be maintained for prequalified status of SMAW and FCAW WPSs.
2. Refer to Detail 13 on Sheet 3 for diagram of weld pass sequence.
3. Adapted with permission from the AWS D1.1 Committee on Structural Welding, Structural Welding Code - Steel, AWS D1.1/D1.1M: 2002, Miami: American Welding Society, Table 3.7.
4. Except root passes.
5. See AWS D1.1/D1.1M:2002, Section 3.7.2, for width-to-depth limitations.
6. In the F, H, or OH positions for nontubulars, split layers when the layer width w > 5/8 inch. In the V position for nontubulars or the 5G or 6G for tubulars, split layers when the width w > 1 inch.

Table 6. STRUCTURAL OBSERVATION CHECKLIST

STRUCTURAL OBSERVATION PROGRAM (Steel Moment Frame for Seismic Application)
☐ Orientation and placement of connected components.
☐ Removal of backing bars, as required on the plans.
☐ Removal of runoff tabs, as required on the plans.
☐ Presence of continuity plates, as required on the plans.
☐ Presence of doubler plates, as required on the plans.
☐ Configuration and finish of weld access holes, if applicable.
☐ Contour of RBS profile, if applicable.
☐ Verify that no welded attachments occur in the plastic hinging region.
☐ Review NDT and deputy inspection reports for general compliance.

NOTES:
1. Weld qualities shall be verified by the Deputy Inspector.
2. The structural observations listed in this Table are in addition to the structural observations that may be required on the structural plans.

BUREAU OF ENGINEERING
OFFICIAL RECORD

Table 1. REPORTS TO BE SUBMITTED TO THE CITY BUILDING INSPECTOR

	PREPARED BY	TYPE OF REPORT
1.	Structural Observer(s)	Structural Observation Reports
2.	Deputy Inspector(s)	Deputy Inspection Reports
3.	NDT Technician(s)	Non-Destructive Testing Reports

Table 2. NON-DESTRUCTIVE TEST LOCATIONS

	REQUIRED LOCATIONS	OMF	IMF	SMF
1.	**CJP Groove Weld** Ultrasonic test shall be performed on all CJP groove welds in materials 5/16 inch (8 mm) thick or greater. In addition, magnetic particle test shall be performed on all beam-to-column CJP groove welds.	B	A	A
2.	**"k" Area** When welding of doubler plates, continuity plates, or stiffeners has been performed in the k-area, the web shall be tested for cracks using magnetic particle testing. The magnetic particle test area shall include the k-area base metal within 3 in. (75 mm) of the weld.	C	B	B
3.	**Beam Cope and Access Hole** At welded splices and connections, thermally cut surfaces of beam copes and access holes shall be tested using magnetic particle testing, when the flange thickness exceeds 1-1/2 in. (38 mm) for rolled shapes.	C	B	B
4.	**Reduced Beam Section Repair** Magnetic particle testing shall be performed on any weld and adjacent area of the RBS plastic hinge region that has been repaired by welding, or on the base metal of the RBS plastic hinge region if a sharp notch has been removed by grinding.	B	B	A
5.	**Base Metal Lamellar Tearing and Laminations at CJP Groove Weld** Base metal thicker than 1-1/2 in. (38 mm) shall be ultrasonically tested for discontinuities behind and adjacent to the fusion line when the base metal is loaded in tension in the through thickness direction in tee and corner joints and the connected material is greater than 3/4 in. (19 mm). Any base metal discontinuities found within t/4 of the steel surface shall be accepted or rejected on the basis of criteria of AWS D1.1 Table 6.2, where t is the thickness of the part subjected to the through-thickness strain.	B	B	A
6.	**End of Weld at Weld Tab Removal Site** Magnetic particle testing shall be performed on the end of welds from which the weld tabs have been removed, except for continuity plate weld tabs.	C	B	B
7.	**PJP Groove Weld** Ultrasonic testing shall be performed on PJP groove welds used in column splices with an effective throat of 3/4 in. (19.1 mm) thick or greater.	C	B	A

NOTE: A, B, and C are the frequencies of non-destructive tests listed in Table 3.

Table 3. NON-DESTRUCTIVE TEST FREQUENCY

	Frequency Designation		
	A	B	C
Ultrasonic Testing (UT)	100% of joints	50% of joints	25% of joints
Magnetic Particle Testing (MT)	50% of joints	25% of joints	Not Required

NOTES:
1. Refer to Table 2 for locations of non-destructive testing.
2. Rate of non-destructive testing may be reduced as permitted in Sheet 1, Part IV, Item 8(d).

Table 4. PREQUALIFIED MINIMUM PREHEAT AND INTERPASS TEMPERATURE

STEEL SPECIFICATION	WELDING PROCESS	THICKNESS OF THICKEST PART AT POINT OF WELDING (in.)	MINIMUM PREHEAT AND INTERPASS TEMPERATURE (°F)
ASTM A36 ASTM A572 Grade 50 ASTM A913 Grade 50 ASTM A992	SMAW with low-hydrogen electrodes, FCAW	1/8 to 3/4 incl.	32
		Over 3/4 to 1-1/2 incl.	50
		Over 1-1/2 to 2-1/2 incl.	150
		Over 2-1/2	225

NOTES:
1. Surfaces to be welded and surfaces adjacent to welds shall be free of moisture pursuant to AWS D1.1/D1.1M:2002 Section 5.15. Use a higher preheat temperature from this Table to remove moisture.
2. Adapted with permission from the AWS D1.1 Committee on Structural Welding, Structural Welding Code - Steel, AWS D1.1/D1.1M: 2002, Miami: American Welding Society, Table 3.2.

THE CITY OF LOS ANGELES OR ITS OFFICERS OR AGENTS SHALL NOT BE RESPONSIBLE FOR THE ACCURACY OR COMPLETENESS OF ELECTRONIC COPIES OF THIS PLAN SHEET.

REVISION DATES (DESIGN STAGE ONLY)

TTLB TEMPLATE REVISION DATE: 02/2013
SHEET ISSUE DATE: 26 APR 19
FILE PATH: BIM 360://Studio City Recreation Center/SCRC-Structural.rvt

DEPARTMENT OF PUBLIC WORKS
BUREAU OF ENGINEERING
CITY OF LOS ANGELES
ENGINEERING

NO.	REVISION DESCRIPTION	DATE	BY

BUILDING NO. -
INDEX NO. RP-300106

REGISTERED PROFESSIONAL ENGINEER
MAHMOOD KARIMZADEH
No. C-62199
Exp. 09-30-19
CIVIL
STATE OF CALIFORNIA

CITY ENGINEER: TED ALLEN, PE — DATE: 29 APR 19
ARCHITECTURAL DIVISION
ENGINEER: NAST ENTERPRISES CORP. LIC. NO.: C-62199 — DATE: 29 APR 19
DESIGNED BY: H.N. — DATE: 29 APR 19
DRAWN BY: H.N. — DATE: 29 APR 19
CHECKED BY: H.N. — DATE: 29 APR 19
APPROVED BY: MAHMOOD KARIMZADEH, AIA, DEPUTY CITY ENGINEER — DATE: 29 APR 19

CITY OF LOS ANGELES
VERTICAL CONTROL:
HORIZONTAL CONTROL:

SHEET TITLE: SMF QA Standard Plan Sht 2 of 3
PROJECT: STUDIO CITY GYMNASIUM
ADDRESS: 12621 RYE STREET, STUDIO CITY, CA 91604

ST Enterprises Corp.
524 S San Vicente Blvd., #202, Los Angeles, CA 90048
Tel: (310) 210 - 3238

WORK ORDER NO. Project Number
PLAN FILE NO.
DRAWING NO. S25
SHEET 140 OF SHEETS 211

PLOTTED:4/30/2019 5:26:13 PM

THE CITY OF LOS ANGELES OR ITS OFFICERS OR AGENTS SHALL NOT BE RESPONSIBLE FOR THE ACCURACY OR COMPLETENESS OF ELECTRONIC COPIES OF THIS PLAN SHEET.

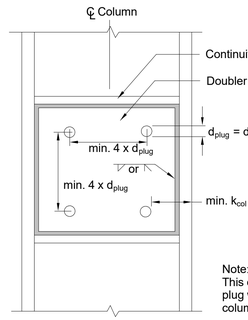

Note:
This detail is intended to illustrate plug welding of doubler plate to column web, when required.

(refer to AWS D1.1/D1.1M:2002 Section 2.3.5, 2.9, and 3.10 for minimum plug weld requirements)

Plug Welding of Doubler Plate to Column — Detail 16
Scale: Not to Scale

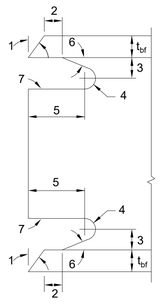

Notes:
1. Bevel as required by a selected AWS prequalified CJP groove welded joint detail.
2. Larger of t_{bf} or 1/2" (plus 1/2 t_{bf}, or minus 1/4 t_{bf}).
3. 3/4 t_{bf} to t_{bf}, 3/4" minimum (± 1/4").
4. 3/8" minimum radius (plus not limited, or minus 0).
5. 3 t (±1/2").
6. Tolerances shall not accumulate to the extent that the angle of the access hole cut to the flange surface exceed 25°.
7. Weld access hole shall be ground smooth to a surface roughness value not to exceed 500 micro inch; and shall be free of notches and gouges.

(from FEMA 350 "Recommended Seismic Design Criteria for New Steel Moment Frame Building" Figure 3-5)

Weld Access Hole Detail — Detail 12
Scale: Not to Scale

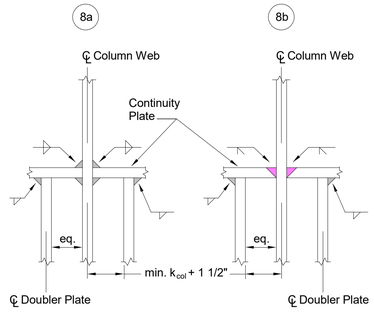

Doubler Plate Welds to Continuity Plate — Detail 8
Scale: Not to Scale

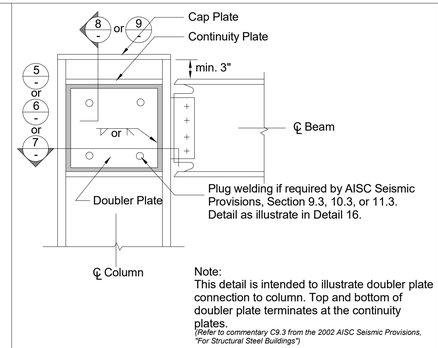

Note:
This detail is intended to illustrate doubler plate connection to column. Top and bottom of doubler plate terminates at the continuity plates.

(Refer to commentary C9.3 from the 2002 AISC Seismic Provisions, "For Structural Steel Buildings")

Web Doubler Plate Detail — Detail 4
Scale: Not to Scale

TYPICAL SHEET 3 GENERAL NOTES:

1. The illustrative details provided herein are intended to highlight the minimum fabrication and welding details that should be reflected on the structural plan. It shall not be used as a substitute for or in lieu of structural details that the Engineer or Architect of Record must provide on the structural plan.
2. The illustrative details does not provide information such as, but not limited to, size of columns or beams, continuity or doubler plate thicknesses, size and length of the fillet welds, the type of beam to column moment connections, steel column frame to foundation connections, or length and location of plastic hinging zones. This information shall be determined by the Engineer or Architect of Record and specified on the structural plan.
3. Where the illustrative details provide information such as weld type to use at a particular weld joint, minimum or maximum dimensions for length, weld size, or gap between base metals, it should be appropriately reflected on the structural plan by the Engineer or Architect of Record.

Typical Sheet 3 Notes
Scale: Not to Scale

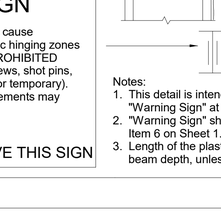

Notes:
1. For maximum fill pass thickness, see Table 5 on Sheet 2.
2. For moment connection at bottom beam flange to column flange, the maximum root pass thickness shall not exceed 1/4" per Part V, Item 1. For welded connection at all other locations, see Table 5 on Sheet 2 for maximum root pass thickness.
3. Root Opening, R, and Groove Angle, α, shall be per selected AWS prequalified CJP groove welded joint detail.
4. Welding pass numbers are shown diagrammatically to indicate sequence. Quantity of passes may vary due to depth and/or position of weld. This figure is intended to illustrate recommended welding sequence for FCAW and SMAW welding process only.

Weld Pass Sequence — Detail 13
Scale: Not to Scale

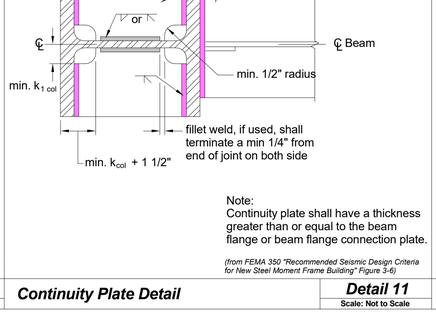

Doubler Plate Welds to Continuity Plate — Detail 9
Scale: Not to Scale

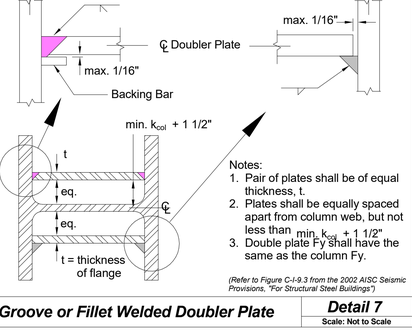

Note:
1. A square-edge plate and square groove weld between doubler plate and column is not permitted.
2. Double plate Fy shall have the same as the column Fy.

(Refer to Figure C-I-9.3 from the 2002 AISC Seismic Provisions, "For Structural Steel Buildings")

Groove Welded Doubler Plate — Detail 5
Scale: Not to Scale

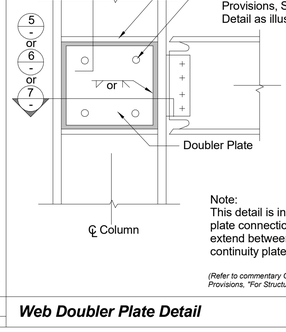

Note:
This detail is for illustrative purpose only. Refer to the structural plans for actual frame connections and details.

Sample Steel Moment Frame — Detail 1
Scale: Not to Scale

TOLERANCES	
As Detailed	As Fit-Up
R = +1/16, -0	+1/4, -1/16
α = +10°, -0°	+10°, -5°

Welding Process	Joint Designation	Base Metal Thickness (U = unlimited) T_1	T_2	Groove Preparation: Root Opening	Groove Angle	Allowed Welding Positions	Gas Shielding for FCAW
SMAW	TC-U4a	U	U	R = 1/4	α = 45°	All	-
				R = 3/8	α = 30°	F, V, OH	-
FCAW	TC-U4a-GF	U	U	R = 3/16	α = 30°	All	Required
				R = 3/8	α = 30°	F	Not required
				R = 1/4	α = 45°	All	Not required

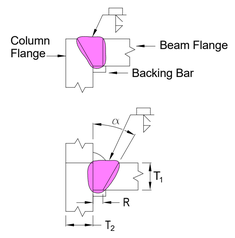

Notes:
1. Groove welds in corner and T-joints of cyclically loaded structures shall be reinforced with fillet welds equal to T_1/4, but need not exceed 3/8 inch.
2. For corner joints, the outside groove preparation may be in either or both members, provided the basic groove configuration is not changed and adequate edge distance is maintained to support the welding operations without excessive edge melting.
3. Adapted with permission from the AWS D1.1 Committee on Structural Welding, Structural Welding Code - Steel, AWS D1.1/D1.1M: 2002, Miami: American Welding Society, Figure 3.4 pg. 92 (top left).

AWS Prequalified CJP Groove Welded Joint Detail — Detail 14
Scale: Not to Scale

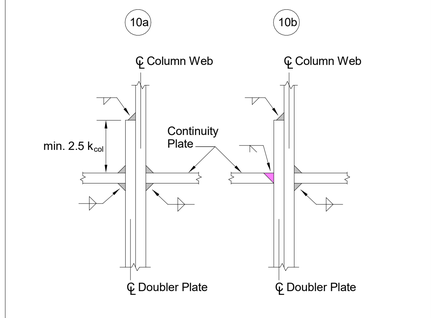

Doubler Plate Welds to Continuity Plate — Detail 10
Scale: Not to Scale

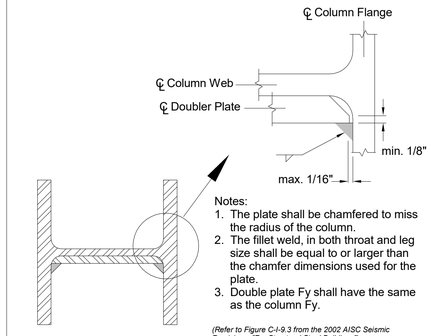

Notes:
1. The plate shall be chamfered to miss the radius of the column.
2. The fillet weld, in both throat and leg size shall be equal to or larger than the chamfer dimensions used for the plate.
3. Double plate Fy shall have the same as the column Fy.

(Refer to Figure C-I-9.3 from the 2002 AISC Seismic Provisions, "For Structural Steel Buildings")

Fillet Welded Doubler Plate — Detail 6
Scale: Not to Scale

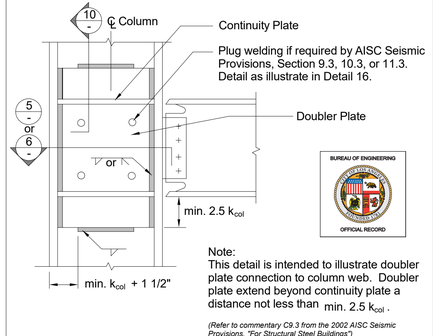

Note:
This detail is intended to illustrate doubler plate connection to column web. Doubler plate extend beyond continuity plate a distance not less than min. 2.5 k_{col}.

(Refer to commentary C9.3 from the 2002 AISC Seismic Provisions, "For Structural Steel Buildings")

Web Doubler Plate Detail — Detail 2
Scale: Not to Scale

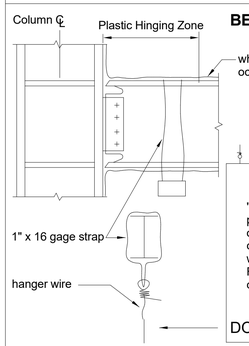

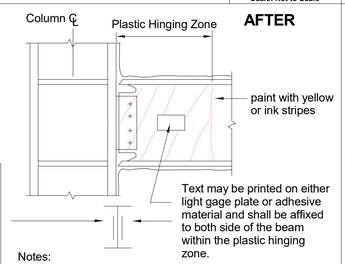

Notes:
1. This detail is intended to illustrate the location of the "Warning Sign" at the plastic hinging zone.
2. "Warning Sign" shall be provided as required by Part IV Item 6 on Sheet 1.
3. Length of the plastic hinging zone shall be a min. of 2 x beam depth, unless noted otherwise on the structural plans.

Warning Sign at Plastic Hinging Zone — Detail 15
Scale: Not to Scale

Note:
Continuity plate shall have a thickness greater than or equal to the beam flange or beam flange connection plate.

(from FEMA 350 "Recommended Seismic Design Criteria for New Steel Moment Frame Building" Figure 3-6)

Continuity Plate Detail — Detail 11
Scale: Not to Scale

Notes:
1. Pair of plates shall be of equal thickness, t.
2. Plates shall be equally spaced apart from column web, but not less than min. k_{col} + 1 1/2"
3. Double plate Fy shall have the same as the column Fy.

(Refer to Figure C-I-9.3 from the 2002 AISC Seismic Provisions, "For Structural Steel Buildings")

Groove or Fillet Welded Doubler Plate — Detail 7
Scale: Not to Scale

Note:
This detail is intended to illustrate doubler plate connection to column. Doubler plate extend between the top and bottom of the continuity plates.

(Refer to commentary C9.3 from the 2002 AISC Seismic Provisions, "For Structural Steel Buildings")

Web Doubler Plate Detail — Detail 3
Scale: Not to Scale

CITY OF LOS ANGELES
DEPARTMENT OF PUBLIC WORKS
BUREAU OF ENGINEERING
ENGINEERING
CITY OF LOS ANGELES
TED ALLEN, PE
ARCHITECTURAL DIVISION
ENGINEER: NAST ENTERPRISES CORP. LIC. NO.: C-62199
DESIGNED BY: H.N.
DRAWN BY: H.N.
CHECKED BY: H.N.
APPROVED BY: MAHMOOD KARIMZADEH, AIA, DEPUTY CITY ENGINEER
ST Enterprises Corp.
554 S San Vicente Blvd., #202, Los Angeles, CA 90048
Tel: (310) 210 - 3238

NO.	REVISION DESCRIPTION	DATE	BY

BUILDING NO. -
INDEX NO. RP-300106

REGISTERED PROFESSIONAL ENGINEER HOWARD NASTARIN NO. C-62199 Exp. 09-30-19 CIVIL STATE OF CALIFORNIA

VERTICAL CONTROL:	
HORIZONTAL CONTROL:	
SHEET TITLE:	SMF QA Standard Plan Sht 3 of 3
PROJECT:	STUDIO CITY GYMNASIUM
ADDRESS:	12621 RYE STREET, STUDIO CITY, CA 91604

WORK ORDER NO. Project Number
PLAN FILE NO.
DRAWING NO. S26
SHEET 141 OF SHEETS 211

TTLB TEMPLATE REVISION DATE: 02/2013
SHEET ISSUE DATE: 26 APR 19
FILE PATH: BIM 360://Studio City Recreation Center/SCRC-Structural.rvt
REVISION DATES (DESIGN STAGE ONLY)
PLOTTED:4/30/2019 5:28:14 PM

GENERAL NOTES

1. VISIT THE JOB SITE AND VERIFY CONDITIONS, LOCATIONS AND DIMENSIONS BEFORE STARTING WORK.
2. COORDINATE ALL WORK WITH OTHER TRADES PRIOR TO ORDERING MATERIALS OR EQUIPMENT.
3. INSTALLATION SHALL COMPLY WITH REQUIREMENTS OF APPLICABLE CODES, LAW, ORDINANCES AND REGULATIONS OF AUTHORITIES HAVING JURISDICTION.
4. ARRANGE TO MAINTAIN CONTINUOUS AIR CONDITIONING SERVICES TO THE EXISTING SYSTEMS AT ALL TIMES, EXCEPT MINOR INTERRUPTIONS OF SHORT DURATION AS MAY BE REQUIRED FOR CONNECTION.
5. A COPY OF THE OPA MANUALS SHALL BE ON THE JOB SITE PRIOR TO STARTING HANGING AND BRACING OF THE SUSPENDED UTILITIES. ONE COPY OF THE MANUAL SHALL BE MADE AVAILABLE TO THE INSPECTOR OF RECORD (IOR) AT ALL TIMES.
6. PROVIDE INSULATION MATERIALS INCLUDING FACINGS HAVING A FLAME SPREAD RATING NOT TO EXCEED 25 AND A SMOKE DEVELOPED RATING NOT TO EXCEED 50 WHEN TESTED IN ACCORDANCE WITH CURRENT UBC STANDARDS.
7. CONTRACTOR VERIFICATION : BEFORE COMMENCEMENT OF WORK, THE CONTRACTOR SHALL VERIFY THE EXACT LOCATIONS, ELEVATIONS, AND CHARACTERISTICS OF ALL UTILITIES AND PIPING AND SHALL IMMEDIATELY NOTIFY THE ARCHITECT OF ANY DISCREPANCIES.
8. EXAMINATION OF SITE AND VERIFICATION OF CONDITIONS : CONTRACTOR SHALL EXAMINE THE SITE AND BECOME ACQUAINTED WITH THE EXISTING CONSTRUCTION AND THE CONDITIONS UNDER WHICH THE WORK IS TO BE CARRIED OUT. UPON SUBMITTING A BID; CONTRACTOR SHALL BE HELD TO HAVE MADE SUCH EXAMINATION, AND NO ALLOWANCE FOR EXTRAS WILL BE ALLOWED FOR ANY ERROR OR OVERSIGHT RESULTING FROM THE CONTRACTOR'S UNFAMILIARITY WITH THE SITE OR EXISTING CONDITIONS. CONTRACTOR SHALL OBTAIN ACCURATE FIELD DIMENSIONS OF ALL RELATED AREAS, SPACES, OPENINGS, LEVELS, AND ITEMS OF ADJACENT WORK AND, BEFORE COMMENCING WORK, REPORT TO THE ARCHITECT IN WRITING ALL DISCREPANCIES BETWEEN THE CONTRACT.
9. INTERFERENCE : ALL WORK SHALL BE INSTALLED SO AS TO AVOID STRUCTURAL FRAMING, ELECTRICAL AND MECHANICAL EQUIPMENT.
10. FULL SIZE : ALL VALVES, UNIONS, ETC. TO BE SAME SIZE AS LINE SIZE UNLESS OTHERWISE INDICATED ON DRAWINGS.
11. UNIONS : UNIONS SHALL BE PROVIDED AND INSTALLED AFTER EACH SCREW-TYPE VALVE AND PRIOR TO EQUIPMENT CONNECTIONS.
12. LATERAL SUPPORT : ALL EQUIPMENT SHALL BE LATERALLY SUPPORTED IN ALL DIRECTIONS TO RESIST A MIN. OF 50% OF THE EQUIPMENT OPERATING WEIGHT.
13. FIELD VERIFICATION : BEFORE FABRICATION OR INSTALLATION, THIS CONTRACTOR SHALL VERIFY EXACT LOCATIONS OF ALL MECHANICAL EQUIPMENT AND EQUIPMENT PROVIDED UNDER ANOTHER SECTION OF SPECIFICATIONS. EXACT ROUGH-IN LOCATIONS AND REQUIREMENTS SHALL BE COORDINATED IN FIELD.
14. SLAB ANCHORING : WHEN INSTALLING DRILLED-IN ANCHORS, POWER DRIVEN PINS AND/OR NEW OPENINGS IN EXISTING NON-PRESTRESSED REINFORCED CONCRETE, USE CARE AND CAUTION TO AVOID CUTTING OR DAMAGING THE EXISTING REINFORCING BARS. WHEN INSTALLING THEM INTO EXISTING PRE STRESSED CONCRETE (PRE-OR POST-TENSIONED), LOCATE THE PRE STRESSED TENDONS BY USING A NONDESTRUCTIVE METHOD PRIOR TO INSTALLATION. EXERCISE EXTREME CARE AND CAUTION TO AVOID CUTTING OR DAMAGING THE TENDONS DURING INSTALLATION. MAINTAIN A MINIMUM CLEARANCE OF ONE INCH (1") BETWEEN THE REINFORCEMENT AND THE DRILLED-IN ANCHOR AND/OR PIN, AND THREE INCHES (3") BETWEEN REINFORCEMENT AND OPENING.
15. SPECIFICATIONS : THESE DRAWINGS SHALL BE READ IN CONJUNCTION WITH, AND BE CONSIDERED TO BE A PART OF THE SPECIFICATIONS.
16. PATCHING : THE CONTRACTOR SHALL BE RESPONSIBLE FOR PATCHING AND REPAIRING ALL AREAS WHICH ARE EXCAVATED AND/OR DAMAGED BY HIS OPERATIONS. IN ADDITION, THE CONTRACTOR SHALL RESTORE TO THEIR ORIGINAL CONDITION ALL PLANTED AREAS DAMAGED BY HIS OPERATIONS.
17. RECONSTRUCT : CONTRACTOR SHALL REMOVE EXISTING AND REBUILD INLIKE WITH NEW OR APPROVED EXISTING MATERIAL. COORDINATE WITH NEW CONSTRUCTION.
18. CONNECTIONS AND EXISTING SERVICES : ALL CONNECTIONS TO EXISTING SERVICES SHALL BE MADE OR SUCH THAT INTERRUPTION TIME WILL BE AS SHORT AS POSSIBLE. THE CONTRACTOR SHALL GIVE THE OWNERS REPRESENTATIVE SUFFICIENT NOTICE OF SUCH INTERRUPTION AND THE ACTUAL SHUTDOWN TIME SHALL BE AT A TIME DESIGNATED BY THE OWNER'S REPRESENTATIVE. ALL PIPING REQUIRING SHUT DOWN AS PART OF CONSTRUCTION (NEW AND EXISTING) SHALL BE CLEANED AND TESTED PER CURRENT 2010 CPC 101.5.
19. EXISTING PIPING DAMAGED : ALL EXISTING PIPING DAMAGED DURING EXCAVATION OR DEMOLITION SHALL BE REPAIRED WITH MATERIALS TO MATCH EXISTING BY THE EXCAVATION.
20. SAW CUTTING/CORE DRILLING : ALL CUTTING EXISTING WALLS, PAVING, WALKS AND/OR FLOORS SHALL BE BY MACHINE SAW CUTTING. HOLES FOR PIPING IN CONCRETE MASONRY WALLS OR FLOORS SHALL BE DONE USING CORE DRILLING EQUIPMENT. ABOVE SHALL BE UNDER THE SUPERVISION OF THE STRUCTURAL ENGINEER.
21. INCOMPATIBLE MATERIAL CONNECTION : CONNECTION BETWEEN INCOMPATIBLE MATERIALS ABOVE GRADE AND INSIDE BUILDING SHALL BE MADE WITH 2 DIELECTRIC UNIONS SEPARATED BY A 12" SECTION OF STAINLESS STEEL PIPE.
22. SUBMITTALS AND SHOP DRAWING : THE CONTRACTOR SHALL SUBMIT SHOP DRAWINGS ON ALL WORK AND SUBMITTALS ON ALL EQUIPMENT AND ACCESSORIES FOR REVIEW PRIOR TO ORDERING, FABRICATION AND INSTALLATION.
23. PLATFORMS, CURBS AND FLASHINGS FOR MECHANICAL EQUIPMENT SHALL BE AS INDICATED ON THE STRUCTURAL AND ARCHITECTURAL DRAWINGS, UNLESS NOTED OTHERWISE.
24. BALANCE, TEST & ADJUST THE EXISTING DISTRIBUTION DUCTWORK, DIFFUSERS AND REGISTERS AS REQUIRED TO MEET DESIGN CFM INDICATED ON THE FLOOR PLANS. UPON COMPLETION OF BALANCING, DELIVER A CERTIFICATE OF THE TEST AND PERFORMANCE OF THE SYSTEM TO THE OWNER CERTIFYING THAT ALL TESTS AND ADJUSTMENTS HAVE BEEN COMPLETED AND THE SYSTEM HAS BEEN BALANCED.
25. A FINAL REPORT FOR THE TESTING AND ADJUSTING OF ALL NEW SYSTEMS SHALL BE COMPLETED PRIOR TO ISSUANCE OF PERMIT. THIS REPORT SHALL BE SIGNED BY THE INDIVIDUAL RESPONSIBLE FOR PERFORMING THESE SERVICES.
26. THE HVAC, REFRIGERATION EQUIPMENT SHALL NOT CONTAIN CFC OR HALONS.
27. DUCTS SHALL BE CONSTRUCTED IN ACCORDANCE WITH SMACNA-2006 OR UL 181 (LAMC 602.1)
28. ALL PLANS INDICATED IN THIS PROJECT FOLLOW 2016 CMC & 2017 LAMC.
29. THE SUPPORT AND BRACING OF SUSPENDED UTILITIES (PIPING, DUCTWORK) SHALL CONFORM TO OSHPD PRE-APPROVED STANDARDS BY M.W. SAUSSE OPM-0203-13. THE SUPPORT AND BRACING OF SUSPENDED UTILITIES SHALL NOT IMPOSE ANY TORSIONAL LOADS ON STRUCTURAL MEMBERS. SEE STRUCTURAL FOR ADDITIONAL INFORMATION AND REQUIREMENTS.

• EQUIPMENT TAGGING DESCRIPTOIN:

AHU 1 — AHU – AIR HANDLER UNIT
1 – UNIT I.D. NO.

FC 1 — FC – VRF INDOOR FAN COIL UNIT
1 – UNIT I.D. NO.

HRU-14 1 — HRU – VRF OUTDOOR HEAT RECOVERY UNIT
14 – UNIT CAPACITY (TONNAGE)
1 – UNIT I.D. NO.

HP-14 1 — HP – VRF OUTDOOR HEAT PUMP UNIT
14 – UNIT CAPACITY (TONNAGE)
1 – UNIT I.D. NO.

V 1 — V – VENTILATOR
1 – UNIT I.D. NO.

EF 1 — EF – EXHAUST FAN
1 – UNIT I.D. NO.

HVAC SHEET INDEX

NO.	SHEET NO.	SHEET DESCRIPTION
1	M001	LEGENDS, NOTES & SHEET INDEX
2	M002	TITLE-24
3	M003	TITLE-24
4	M004	TITLE-24
5	M005	SCHEDULES
6	M006	SCHEDULES
7	M100	HVAC FLOOR PLAN
8	M103	HVAC ROOF PLAN
9	M104	HVAC SECTION
10	M401	DETAILS
11	M402	DETAILS
12	M403	DETAILS
13	M404	DETAILS
14	M405	DETAILS
15	M501	CONTROLS
16	M502	CONTROLS FOR GYMNASIUM
17	M503	CONTROLS FOR COMMUNITY ROOM & OFFICE
18	M504	CONTROLS FOR COMM. RM & ELEC RM
19	M505	CONTROLS
20	M506	CONTROLS
21	M507	CONTROLS

SPECIAL BID INSTRUCTIONS

SPECIAL BID INSTRUCTIONS

THESE DRAWINGS ARE PREPARED BASED ON AVAILABLE RECORD DRAWINGS AND NON-INVASIVE, NON-INSTRUMENT ASSISTED, VISUAL, FIELD OBSERVATION ONLY. THE INTENT OF THESE DRAWINGS IS TO DEFINE THE SCOPE OF WORK AND CONVEY THE DESIGN CONCEPTS ONLY.

IT IS THE RESPONSIBILITY OF THE CONTRACTOR TO VERIFY THE EXISTING UTILITIES THROUGH AN INVASIVE, INSTRUMENT ASSISTED OR OTHER ACCEPTED AND RELIABLE SURVEYING METHODS AND PREPARE SHOP DRAWINGS THAT ARE IN COMPLIANCE WITH THE CONCEPT DOCUMENTS FOR SUBMITTAL TO THE ENGINEER OF RECORD.

REQUESTS FOR CHANGE ORDERS WILL NOT BE CONSIDERED FOR DEVIATION OF THE LOCATION OR SIZE OF THE EXISTING UTILITIES FROM THE CONCEPT DRAWINGS.

DEMOLITION NOTES

1. DEMOLITION OF EXISTING EQUIPMENT AND MISCELLANEOUS SITE ITEMS IN NEW CONSTRUCTION AREA AS INDICATED ON ARCHITECTURAL. DEMOLITION DRAWING SHALL BE EXAMINED FOR UTILITIES AND SHALL BE CAPPED OR PLUGGED OR REROUTED TO MAINTENANCE SERVICE AS REQUIRED TO AREA OF NEW WORK. PROVIDE AS-BUILT DRAWING OF ITEM ABOVE INDICATING LOCATION, ELEVATION, SIZE, DIRECTION OF FLOW AND SERVICE.

MECHANICAL ABBREVIATIONS

ABBREV.	DESCRIPTION
10'-0"x0'-6" LD.LG.	10 FT. LENGTH x 6 IN. WIDTH LINEAR DIFFUSER, LINEAR GRILLE.
ABV.	ABOVE
AFF	ABOVE FINISHED FLOOR
BEL.	BELOW
BHP	BRAKE HORSE POWER
CFM	CUBIC FEET PER MINUTE
CONT.	CONTINUED , CONTINUATION
DN.	DOWN
(E)	EXISTING
E.S.P	EXTERNAL STATIC PRESSURE
FPM	FEET PER MINUTE
FS	FLOOR SINK
HP	HORSE POWER
LVR.	LOUVER
N/A	NOT APPLICABLE
N/R	NOT REQUIRED
RPM	REVOLUTIONS PER MINUTE
TYP.	TYPICAL
U.O.N	UNLESS OTHERWISE NOTED
V-ø	VOLT-PHASE
W/	WITH
W/O	WITHOUT
%EFF	EFFICIENCY (%)

CONTROL LEGEND

1. ALL ITEMS INDICATED IN THIS LEGEND ARE NOT NECESSARILY USED ON THE DRAWINGS.
2. LINE VOLTAGE WIRING, CONDUIT & DEVICES TO BE PROVIDED UNDER DIVISION 16.
3. LOW VOLTAGE (LESS THAN 50 VOLTS) WIRING, CONDUIT & DEVICES TO BE PROVIDED UNDER DIVISION 15.

SYMBOL	DESCRIPTION
(E)	ITEM TO BE FURNISHED AND INSTALLED UNDER ELECTRICAL DIVISION.
MS	MAGNETIC STARTER (E)
NO	NORMALLY OPEN ELECTRICAL CONTACT (E)
NC	NORMALLY CLOSED ELECTRICAL CONTACT (E)
CR	ELECTRICAL COIL RELAY (E)
OVL	OVERLOAD PROTECTION (E)
PL	PILOT LIGHT (E)
	ON – OFF SWITCH (E)
	HAND – OFF – AUTOMATIC SWITCH (E)
DISC. S	DISCONNECT SWITCH (E)
	ELECTRIC SWITCHING DEVICE (E)
FS	FLOW SWITCH
TS	TEMPERATURE SWITCH
	FLOAT SWITCH
TD	TIME DELAY SWITCH
	SENSOR(TEMPERATURE, HUMIDITY ETC.)
P	PRESSURE SENSOR
SD.	SMOKE DETECTOR (SWITCH ACTIVATED BY) (E)
OVL	SINGLE PHASE MOTOR W/BUILT-IN OVERLOAD PROTECTION
EM	ON EMERGENCY POWER (E)
MCC MCC	MOTOR CONTROL CENTER (E)
CP CP	CONTROL PANEL
	LINE VOLTAGE (E)
	LOW VOLTAGE
	SLASHES INDICATE NO. OF WIRES
A	ACTUATOR FOR VALVE OR DAMPER
A	CONTROL AIR
CB	CIRCUIT BREAKER (E)

CONTROL ABBREVIATIONS

ABBREV.	DESCRIPTION
AO, AI	ANALOG OUTPUT, ANALOG INPUT
DO, DI	DIGITAL OUTPUT, DIGITAL INPUT
FMS	FACILITY MANAGEMENT SYSTEM
NC.C.NO.	NORMALLY CLOSED. COMMON. NORMALLY OPEN
PC	PROGRAMMABLE CONTROLLER
U.P.S	UNINTERRUPTED POWER SUPPLY (E)
U.O.N	UNLESS OTHERWISE NOTED

MECHANICAL LEGEND

ALL ITEMS INDICATED IN THIS LEGEND ARE NOT NECESSARILY USED ON THE DRAWINGS.

SYMBOL	DESCRIPTION
	MATCH LINE
	EQUIPMENT DESIGNATION
	DETAIL REFERENCE
	NOTE REFERENCE
P.O.C	POINT OF CONNECTION
P.O.R	POINT OF REMOVAL
OA. SA. RA. EXH.	OUTSIDE AIR. SUPPLY. RETURN. EXHAUST
	SUPPLY AIR DUCT DOWN
	RETURN OR OUTSIDE AIR DUCT DOWN
	EXHAUST AIR DUCT DOWN
	SUPPLY AIR DUCT UP
	RETURN OR OUTSIDE AIR DUCT UP
	EXHAUST AIR DUCT UP
	LINED DUCT
	TURNING VANES
	TRANSITION
	FLEXIBLE DUCT
	FLEXIBLE DUCT CONNECTION
BD	BACKDRAFT DAMPER
MVD	MANUAL VOLUME DAMPER
ZD	ZONE CONTROL DAMPER (VVT SYSTEM)
FD	FIRE DAMPER
CSFD	COMBINATION SMOKE & FIRE DAMPER
SD	SMOKE DETECTOR
2.5 ⌀	LOUVER (EX; 2.5 ⌀)
	UNDERCUT DOOR 3/4" ABOVE FINISHED FLOOR
AD. AP.	ACCESS DOOR. ACCESS PANEL.
12x12 CD. CR.CG.	12x12 CEILING DIFFUSER. REGISTER. GRILLE. . ARROWS INDICATE THROW PATTERN.
12x12 TR. TG.BR.BG.	12x12 TOP REGISTER. GRILLE. BOTTOM REGISTER. GRILLE.
CHS	CHILLED WATER SUPPLY
CHR	CHILLED WATER RETURN
BS	BRINE SUPPLY
BR	BRINE RETURN
CWS	CONDENSER WATER SUPPLY
CWR	CONDENSER WATER RETURN
MTWS	MEDIUM TEMP. WATER SUPPLY FOR SPACE HEATING
MTWR	MEDIUM TEMP. WATER RETURN FOR SPACE HEATING
D	CONDENSATE DRAIN (INDIRECT)
	UNION. FLANGE
	SHUT-OFF VALVE (GATE VALVE)
	BALANCING VALVE (GLOBE VALVE)
	FLOW LIMITING VALVE
	COCK
	STRAINER
	CHECK VALVE
	PRESSURE GAUGE
	BUTTERFLY VALVE
	GAUGE COCK
	THERMOMETER
MAV	MANUAL AIR VENT
PRV	PRESSURE REDUCING VALVE
	RELIEF VALVE
	3 WAY CONTROL VALVE
	2 WAY CONTROL VALVE
	PIPE ANCHOR
	PIPE GUIDE
	FLEXIBLE PIPE CONNECTION
T H S TS T.H.S.	ZONE TEMPERATURE SENSOR, HUMIDITY SENSOR, SWITCH, TEMPERATURE SENSOR
	RAIN SENSOR
	REFRIGERANT SENSOR
D	DUCT DROP IN DIRECTION OF AIR FLOW
R	DUCT RISE IN DIRECTION OF AIR FLOW
TM	MANUAL BYPASS TIMER
	EXISTING HVAC DUCTWORK/EQUIPTMENT TO REMAIN
	EXISTING HVAC DUCTWORK/EQUIPTMENT TO BE REMOVED
MB	MIXING BOX

THE SEISMIC ANCHORAGE OF MECHANICAL AND ELECTRICAL EQUIPMENT SHALL CONFORM TO ASCE 7 SECTION 13.3.1 AND TABLE 13.6.1. ANCHORAGE DETAILS FOR ROOF/FLOOR MOUNTED EQUIPMENT SHALL BE SHOWN ON PLANS. WHERE ANCHORAGE DETAILS ARE NOT SHOWN ON THE DRAWINGS, THE FIELD INSTALLATION SHALL BE SUBJECT TO THE APPROVAL OF THE STRUCTURAL ENGINEER AND THE FIELD ENGINEER OF THE CITY OF LOS ANGELES.

BUREAU OF ENGINEERING — OFFICIAL RECORD

BUREAU OF ENGINEERING
ENGINEERING — CITY OF LOS ANGELES

NO.	REVISION DESCRIPTION	DATE	BY
	INDEX		

BUILDING - RP-300106

REGISTERED PROFESSIONAL ENGINEER — JAMES H. SHWE — No. 26903 — Renewal: 9/30/20 — MECHANICAL — STATE OF CALIFORNIA

DEPARTMENT OF PUBLIC WORKS
CITY OF LOS ANGELES

CITY	DATE	
	26.APR.19	
	26.APR.19	
	26.APR.19	
	26.APR.19	
	26.APR.19	

TED ALLEN, PE — ARCHITECTURAL — LIC. NO.: M 26903
ARCHITECT/ENGINEER : JAMES H SHWE
DESIGNED BY: JS
DRAWN BY: S.W.L
CHECKED BY: J.S/N.W
APPROVED BY: MAHMOOD KARIMZADEH, AIA, DEPUTY CITY ENGINEER

VERTICAL CONTROL:
HORIZONTAL:
SHEET: LEGEND, NOTES,& SHEET INDEX
PROJECT: STUDIO CITY GYMNASIUM
ADDRESS: 12621 RYE STREET, STUDIO CITY, CA 91604

WORK ORDER: E170267B
PLAN FILE
DRAWING: M001
SHEET 142 OF SHEET 211

Project Status
PROJECT ISSUE DATE: Project Issue Date

THE CITY OF LOS ANGELES OR ITS OFFICERS OR AGENTS SHALL NOT BE RESPONSIBLE FOR THE ACCURACY OR COMPLETENESS OF ELECTRONIC COPIES OF THIS PLAN

TTLB TEMPLATE REVISION DATE:
SHEET ISSUE DATE:
FILE PATH:
REVISION DATES (DESIGN STAGE)

16007/STUDIO CITY-REC CENTER/07-29-2019

Project Name:	Studio City Recreation Center	NRCC-PRF-01-E	Page 7 of 25
Project Address:	12621 Rye St Studio City 91604	Calculation Date/Time:	09:55, Thu, Jun 13, 2019
Compliance Scope:	NewComplete	Input File Name:	Studio City Recreation Center (Gym)_NR T24 Compliance Report_06-13-2019 (With NV Fan).cibd16x

H. CERTIFICATE OF INSTALLATION, CERTIFICATE OF ACCEPTANCE & CERTIFICATE OF VERIFICATION SUMMARY (NRCI/NRCA/NRCV) –
Documentation Author to indicate which Certificates must be submitted for the features to be recognized for compliance
(Retain copies and verify forms are completed and signed to post in field for Field Inspector to verify).
See Tables G. and H. in MCH and LTI Details Sections for Acceptance Tests and forms by equipment.

Confirmed

Building Component	Compliance Forms *(required for submittal)*	Pass	Fail
Covered Process	☐ NRCI-PRC-01-E Covered Processes	☐	☐
	☐ NRCA-PRC-01-F- Compressed Air Systems	☐	☐
	☐ NRCA-PRC-02-F- Kitchen Exhaust	☐	☐
	☐ NRCA-PRC-03-F- Garage Exhaust	☐	☐
	☐ NRCA-PRC-04-F- Refrigerated Warehouse- Evaporator Fan Motor Controls	☐	☐
	☐ NRCA-PRC-05-F- Refrigerated Warehouse- Evaporative Condenser Controls	☐	☐
	☐ NRCA-PRC-06-F- Refrigerated Warehouse- Air Cooled Condenser Controls	☐	☐
	☐ NRCA-PRC-07F- Refrigerated Warehouse- Variable Speed Compressor	☐	☐
	☐ NRCA-PRC-08-F- Electrical Resistance Underslab Heating System	☐	☐

I. ENVELOPE GENERAL INFORMATION (See NRCC-PRF-ENV-DETAILS for more information)

						Confirmed	
1.	Total Conditioned Floor Area	10,259 ft²	5.	Number of Floors Above Grade	1	Pass	Fail
2.	Total Unconditioned Floor Area	1,468 ft²	6.	Number of Floors Below Grade	0		
3.	Addition Conditioned Floor Area	0 ft²					
4.	Addition Unconditioned Floor Area	0 ft²					

7. Opaque Surfaces & Orientation	8. Total Gross Surface Area	9. Total Fenestration Area	10. Window to Wall Ratio	Pass	Fail
North Wall	2,638 ft²	417 ft²	15.8%	☐	☐
East Wall	5,047 ft²	1,311 ft²	26.0%	☐	☐
South Wall	8,420 ft²	2,424 ft²	28.8%	☐	☐
West Wall	2,886 ft²	12 ft²	00.4%	☐	☐
Total	**18,990 ft²**	**4,163 ft²**	**21.9%**	☐	☐
Roof	10,259 ft²	34 ft²	00.3%	☐	☐

Project Name:	Studio City Recreation Center	NRCC-PRF-01-E	Page 4 of 25
Project Address:	12621 Rye St Studio City 91604	Calculation Date/Time:	09:55, Thu, Jun 13, 2019
Compliance Scope:	NewComplete	Input File Name:	Studio City Recreation Center (Gym)_NR T24 Compliance Report_06-13-2019 (With NV Fan).cibd16x

G. COMPLIANCE PATH & CERTIFICATE OF COMPLIANCE SUMMARY

The following building components are only eligible for prescriptive compliance. Indicate which are relevant to the project.

Yes	NA	Prescriptive Requirement	Compliance Forms
☒	☐	Lighting (Indoor Unconditioned) §140.6	NRCC-LTI-01 / 02 / 03 / 04 / 05-E
☐	☒	Lighting (Outdoor) §140.7	NRCC-LTO-01 / 02 / 03-E
☐	☒	Lighting (Sign) §140.8	NRCC-LTS-01-E
☐	☒	Solar Thermal Water Heating: §140.5	NRCC-STH-01-E

The following building components may have mandatory requirements per Part 6. Indicate which are relevant to the project.

Yes	NA	Mandatory Requirement	Compliance Forms
☐	☒	Commissioning: §120.8	
☐	☒	Simple Systems Complex Systems	NRCC-CXR-01 / 02 / 03 / 05-E NRCC-CXR-01 / 02 / 04 / 05-E
☐	☒	Electrical: §130.5	NRCC-ELC-01-E
☐	☒	Solar Ready: §110.10	NRCC-SRA-01 / 02-E
☐ ☐ ☐ ☐ ☐ ☐	☒ ☒ ☒ ☒ ☒ ☒	Covered Process: §120.6 Parking Garage Commercial Refrigeration Warehouse Refrigeration Compressed Air Process Boilers	NRCC-PRC-01-E NRCC-PRC-02-E NRCC-PRC-05-E NRCC-PRC-06/07/08-E NRCC-PRC-10-E NRCC-PRC-11-E

Project Name:	Studio City Recreation Center	NRCC-PRF-01-E	Page 1 of 25
Project Address:	12621 Rye St Studio City 91604	Calculation Date/Time:	09:55, Thu, Jun 13, 2019
Compliance Scope:	NewComplete	Input File Name:	Studio City Recreation Center (Gym)_NR T24 Compliance Report_06-13-2019 (With NV Fan).cibd16x

A. PROJECT GENERAL INFORMATION

1.	Project Location (city)	Studio City	8.	Standards Version	Compliance2016
2.	CA Zip Code	91604	9.	Compliance Software (version)	EnergyPro 7.2
3.	Climate Zone	9	10.	Weather File	BURBANK-GLENDALE_722880_CZ2010.epw
4.	Total Conditioned Floor Area in Scope	10,259 ft²	11.	Building Orientation (deg)	(N) 0 deg
5.	Total Unconditioned Floor Area	1,468 ft²	12.	Permitted Scope of Work	NewComplete
6.	Total # of Stories (Habitable Above Grade)	1	13	Building Type(s)	Nonresidential
7.	Total # of dwelling units	0	14	Gas Type	Propane

B. COMPLIANCE RESULTS FOR PERFORMANCE COMPONENTS (Annual TDV Energy Use, kBtu/ft ²-yr) **§ 140.1**

BUILDING COMPLIES

1. Energy Component	2. Standard Design (TDV)	3. Proposed Design (TDV)	4. Compliance Margin (TDV)	5. Percent Better than Standard
Space Heating	17.30	2.44	14.86	85.9%
Space Cooling	315.25	203.00	112.25	35.6%
Indoor Fans	110.14	72.09	38.05	34.5%
Heat Rejection	--	--	--	--
Pumps & Misc.	3.28	--	3.28	--
Domestic Hot Water	46.33	17.65	28.68	61.9%
Indoor Lighting	69.52	41.63	27.89	40.1%
COMPLIANCE TOTAL	**561.82**	**336.81**	**225.01**	**40.1%**
Receptacle	59.88	59.88	0.0	0.0%
Process	103.53	103.53	0.0	0.0%
Other Ltg	--	--	--	--
Process Motors	0.95	0.95	0.0	0.0%
TOTAL	**726.18**	**501.17**	**225.0**	**31.0%**

Project Name:	Studio City Recreation Center	NRCC-PRF-01-E	Page 8 of 25
Project Address:	12621 Rye St Studio City 91604	Calculation Date/Time:	09:55, Thu, Jun 13, 2019
Compliance Scope:	NewComplete	Input File Name:	Studio City Recreation Center (Gym)_NR T24 Compliance Report_06-13-2019 (With NV Fan).cibd16x

J. FENESTRATION ASSEMBLY SUMMARY **§ 110.6** **Confirmed**

1. Fenestration Assembly Name / Tag or I.D.	2. Fenestration Type / Product Type / Frame Type	3. Certification Method[1]	4. Assembly Method	5. Area ft²	6. Overall U-factor	7. Overall SHGC	8. Overall VT	9. Status[2]	Pass	Fail
Curtain Wall-	VerticalFenestration CurtainWall N/A	NFRC Rated	SiteBuilt	2524	0.42	0.22	0.04	N	☐	☐
Operable Window	VerticalFenestration CurtainWall N/A	NFRC Rated	SiteBuilt	1140	0.42	0.22	0.04	N	☐	☐
Double Metal Clear	VerticalFenestration FixedWindow MetalFraming	Default Performance	SiteBuilt	499	0.71	0.73	0.77	N	☐	☐
Skylight Gym_BuroHappold	Skylight FixedWindow N/A	NFRC Rated	Manufactured	31	0.51	0.19	0.50	N	☐	☐
Skylight Community Rooms_BuroHappold	Skylight FixedWindow N/A	NFRC Rated	Manufactured	3	1.26	0.22	0.50	N	☐	☐

[1] *Newly installed fenestration shall have a certified NFRC Label Certificate or use the CEC default tables found in Table 110.6-A and Table 110.6-B. Center of Glass (COG) values are for the glass-only, determined by the manufacturer, and are shown for ease of verification. Site-built fenestration values are calculated per Nonresidential Appendix NA6 and are used in the analysis.*
[2] *Status: N - New, A – Altered, E – Existing*

Taking compliance credit for fenestration shading devices? (If "Yes", see NRCC-PRF-ENV-DETAILS for more information) No

K. OPAQUE SURFACE ASSEMBLY SUMMARY **§ 120.7/ § 140.3** **Confirmed**

1. Surface Name	2. Surface Type	3. Area (ft²)	4. Framing Type	5. Cavity R-Value	6. Continuous R-Value	7. U-Factor / F-Factor / C-Factor	8. Status[1]	Pass	Fail
Metal Wall with Rigid Ins7	ExteriorWall	19941	Metal	19	7	U-Factor: 0.080	N	☐	☐
Slab On Grade_BuroHappold16	UndergroundFloor	11727	NA	0	29	F-Factor: 0.730	N	☐	☐
Metal Roof with Rigid and18	Roof	11727	Metal	11	31	U-Factor: 0.026	N	☐	☐
R-0 Wall Metal Stud64	InteriorWall	340	Metal	0	NA	U-Factor: 0.371	N	☐	☐

[1] *Status: N - New, A – Altered, E – Existing*

Project Name:	Studio City Recreation Center	NRCC-PRF-01-E	Page 5 of 25
Project Address:	12621 Rye St Studio City 91604	Calculation Date/Time:	09:55, Thu, Jun 13, 2019
Compliance Scope:	NewComplete	Input File Name:	Studio City Recreation Center (Gym)_NR T24 Compliance Report_06-13-2019 (With NV Fan).cibd16x

H. CERTIFICATE OF INSTALLATION, CERTIFICATE OF ACCEPTANCE & CERTIFICATE OF VERIFICATION SUMMARY (NRCI/NRCA/NRCV) –
Documentation Author to indicate which Certificates must be submitted for the features to be recognized for compliance
(Retain copies and verify forms are completed and signed to post in field for Field Inspector to verify).
See Tables G. and H. in MCH and LTI Details Sections for Acceptance Tests and forms by equipment.

Confirmed

Building Component	Compliance Forms *(required for submittal)*	Pass	Fail
Envelope	☒ NRCI-ENV-01-E - For all buildings	☐	☐
	☒ NRCA-ENV-02-F- NFRC label verification for fenestration	☐	☐
Mechanical	☒ NRCI-MCH-01-E - For all buildings with Mechanical Systems	☐	☐
	☒ NRCA-MCH-02-A- Outdoor Air	☐	☐
	☒ NRCA-MCH-03-A – Constant Volume Single Zone HVAC	☐	☐
	☐ NRCA-MCH-04-H- Air Distribution Duct Leakage	☐	☐
	☒ NRCA-MCH-05-A- Air Economizer Controls	☐	☐
	☒ NRCA-MCH-06-A- Demand Control Ventilation	☐	☐
	☒ NRCA-MCH-07-A – Supply Fan Variable Flow Controls	☐	☐
	☐ NRCA-MCH-08-A- Valve Leakage Test	☐	☐
	☐ NRCA-MCH-09-A – Supply Water Temp Reset Controls	☐	☐
	☐ NRCA-MCH-10-A- Hydronic System Variable Flow Controls	☐	☐
	☒ NRCA-MCH-11-A – Auto Demand Shed Controls	☐	☐
	☒ NRCA-MCH-12-A- Packaged Direct Expansion Units	☐	☐
	☐ NRCA-MCH-13-A- Air Handling Units and Zone Terminal Units	☐	☐
	☐ NRCA-MCH-14-A- Distributed Energy Storage	☐	☐
	☐ NRCA-MCH-15-A – Thermal Energy Storage	☐	☐
	☒ NRCA-MCH-16-A- Supply Air Temp Reset Controls	☐	☐
	☐ NRCA-MCH-17-A – Condensate Water Temp Reset Controls	☐	☐
	☐ NRCA-MCH-18-A- Energy Management Controls Systems	☐	☐
	☐ NRCV-MCH-04-H- Duct Leakage Test	☐	☐

Project Name:	Studio City Recreation Center	NRCC-PRF-01-E	Page 2 of 25
Project Address:	12621 Rye St Studio City 91604	Calculation Date/Time:	09:55, Thu, Jun 13, 2019
Compliance Scope:	NewComplete	Input File Name:	Studio City Recreation Center (Gym)_NR T24 Compliance Report_06-13-2019 (With NV Fan).cibd16x

C. PRIORITY PLAN CHECK/ INSPECTION ITEMS (in order of highest to lowest TDV energy savings)

1st	Space Cooling: Check envelope and mechanical
2nd	Indoor Fans: Check envelope and mechanical
3rd	Domestic Hot Water: Check mechanical
4th	Indoor Lighting: Check lighting
5th	Space Heating: Check envelope and mechanical
6th	Pumps & Misc.: Check mechanical
7th	Heat Rejection: Check envelope and mechanical

Compliance Margin By Energy Component (from Table B column 4)

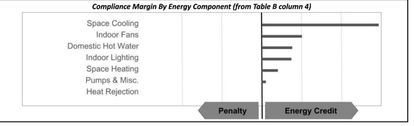

D. EXCEPTIONAL CONDITIONS

The proposed building claims credit for non-mandatory lighting control credits via Power Adjustment Factors (PAFs) as outlined in Standards Table 140.6-A. Review NRCC-PRF-LTI DETAILS Table A to ensure that credit is not claimed for mandatory controls.

This project uses the Simplified Geometry Performance Modeling Approach which is not capable of modeling daylighting controls and assumes the prescriptive Secondary Daylit Control requirements are met. PRESCRIPTIVE COMPLIANCE documentation (form NRCC-LTI-02-E) for the requirements of section 140.6(d) Automatic Daylighting Controls in Secondary Daylit Zones is required.

This project includes Domestic Hot Water in the analysis. Please verify that Domestic Hot Water is included in the design for the permitted scope of work.

E. HERS VERIFICATION

This Section Does Not Apply

F. ADDITIONAL REMARKS

None Provided

BUREAU OF ENGINEERING
OFFICIAL RECORD

Project Name:	Studio City Recreation Center	NRCC-PRF-01-E	Page 6 of 25
Project Address:	12621 Rye St Studio City 91604	Calculation Date/Time:	09:55, Thu, Jun 13, 2019
Compliance Scope:	NewComplete	Input File Name:	Studio City Recreation Center (Gym)_NR T24 Compliance Report_06-13-2019 (With NV Fan).cibd16x

H. CERTIFICATE OF INSTALLATION, CERTIFICATE OF ACCEPTANCE & CERTIFICATE OF VERIFICATION SUMMARY (NRCI/NRCA/NRCV) –
Documentation Author to indicate which Certificates must be submitted for the features to be recognized for compliance
(Retain copies and verify forms are completed and signed to post in field for Field Inspector to verify).
See Tables G. and H. in MCH and LTI Details Sections for Acceptance Tests and forms by equipment.

Confirmed

Building Component	Compliance Forms *(required for submittal)*	Pass	Fail
Plumbing	☒ NRCI-PLB-01-E - For all buildings with Plumbing Systems	☐	☐
	☐ NRCI-PLB-02-E - required on central systems in high-rise residential, hotel/motel application.	☐	☐
	☐ NRCI-PLB-03-E - Single dwelling unit systems in high-rise residential, hotel/motel application.	☐	☐
	☐ NRCI-PLB-21-E - HERS verified central systems in high-rise residential, hotel/motel application.	☐	☐
	☐ NRCI-PLB-22-E - HERS verified single dwelling unit systems in high-rise residential, hotel/motel application.	☐	☐
	☐ NRCV-PLB-21-H- HERS verified central systems in high-rise residential, hotel/motel application.	☐	☐
	☐ NRCV-PLB-22-H - HERS verified single dwelling unit systems in high-rise residential, hotel/motel application.	☐	☐
	☐ NRCI-STH-01-E - Any solar water heating	☐	☐
Indoor Lighting	☒ NRCI-LTI-01-E - For all buildings	☐	☐
	☐ NRCI-LTI-02-E - Lighting control system, or for an Energy Management Control System (EMCS)	☐	☐
	☐ NRCI-LTI-03-E - Line-voltage track lighting integral current limiter, or for a supplementary overcurrent protection panel used to energize only line-voltage track lighting	☐	☐
	☐ NRCI-LTI-04-E - Two interlocked systems serving an auditorium, a convention center, a conference room, or a theater	☐	☐
	☒ NRCI-LTI-05-E - Lighting Control Credit Power Adjustment Factor (PAF)	☐	☐
	☐ NRCI-LTI-06-E - Additional wattage installed in a video conferencing studio	☐	☐
	☒ NRCA-LTI-02-A - Occupancy sensors and automatic time switch controls.	☐	☐
	☒ NRCA-LTI-03-A - Automatic daylighting controls	☐	☐
	☒ NRCA-LTI-04-A - Demand responsive lighting controls	☐	☐
Outdoor Lighting	☐ NRCI-LTO-01-E – Outdoor Lighting	☐	☐
	☐ NRCI-LTO-02-E- EMCS Lighting Control System	☐	☐
	☐ NRCA-LTO-02-A - Outdoor Lighting Control	☐	☐
Sign Lighting	☐ NRCI-LTS-01-E – Sign Lighting	☐	☐
Electrical	☐ NRCI-ELC-01-E - Electrical Power Distribution	☐	☐
Photovoltaic	☐ NRCI-SPV-01-E Photovoltaic Systems	☐	☐

Project Name:	Studio City Recreation Center	NRCC-PRF-01-E	Page 3 of 25
Project Address:	12621 Rye St Studio City 91604	Calculation Date/Time:	09:55, Thu, Jun 13, 2019
Compliance Scope:	NewComplete	Input File Name:	Studio City Recreation Center (Gym)_NR T24 Compliance Report_06-13-2019 (With NV Fan).cibd16x

G. COMPLIANCE PATH & CERTIFICATE OF COMPLIANCE SUMMARY

Identify which building components use the performance or prescriptive path for compliance. "NA"= not in project
For components that utilize the performance path, indicate the sheet number that includes mandatory notes on plans.

Building Component		Compliance Path	Compliance Forms *(required for submittal)*	Location of Mandatory Notes on Plans
Envelope	☒	Performance	NRCC-PRF-ENV-DETAILS (section of the NRCC-PRF-01-E)	
	☐	Prescriptive	NRCC-ENV-01 / 02 / 03 / 04 / 05 / 06-E	
	☐	NA		
Mechanical	☒	Performance	NRCC-PRF-MCH-DETAILS (section of the NRCC-PRF-01-E)	
	☐	Prescriptive	NRCC-MCH-01 / 02 / 03 / 04 / 05 / 06 / 07-E	
	☐	NA		
Domestic Hot Water	☒	Performance	NRCC-PRF-PLB-DETAILS (section of the NRCC-PRF-01-E)	
	☐	Prescriptive	NRCC-PLB-01-E	
	☐	NA		
Lighting (Indoor Conditioned)	☒	Performance	NRCC-PRF-LTI-DETAILS (section of the NRCC-PRF-01-E)	
	☐	Prescriptive	NRCC-LTI-01 / 02 / 03 / 04 / 05-E	
	☐	NA		
Covered Process: Commercial Kitchens	☐	Performance	S2 (section of the NRCC-PRF-01-E)	
	☐	Prescriptive	NRCC-PRC-01/ 03-E	
	☒	NA		
Covered Process: Computer Rooms	☐	Performance	S3 (section of the NRCC-PRF-01-E)	
	☐	Prescriptive	NRCC-PRC-01/ 04-E	
	☒	NA		
Covered Process: Laboratory Exhaust	☐	Performance	S4 (section of the NRCC-PRF-01-E)	
	☐	Prescriptive	NRCC-PRC-01/ 09-E	
	☒	NA		

THE CITY OF LOS ANGELES OR ITS OFFICERS OR AGENTS SHALL NOT BE RESPONSIBLE FOR THE ACCURACY OR COMPLETENESS OF ELECTRONIC COPIES OF THIS PLAN

TTLB_TEMPLATE REVISION DATE:
SHEET ISSUE DATE:
FILE PATH:
REVISION DATES (DESIGN STAGE)

BUREAU OF ENGINEERING
ENGINEERING
CITY OF LOS ANGELES

NO.	REVISION DESCRIPTION	DATE	BY

BUILDING -
INDEX **RP-300106**

REGISTERED PROFESSIONAL ENGINEER
JAMES H. SHWE
No. 26903
Renewal: 9/30/20
MECHANICAL
STATE OF CALIFORNIA

DEPARTMENT OF PUBLIC WORKS
CITY OF LOS ANGELES

TED ALLEN, PE

		DATE
ARCHITECTURAL		
ARCHITECT/ENGINEER	JAMES H SHWE	LIC. NO.: M 26903
DESIGNED BY:	J.S	
DRAWN BY:	S.W.L	
CHECKED BY:	J.SIN.W	
APPROVED BY:	MAHMOOD KARIMZADEH, AIA, DEPUTY CITY ENGINEER	26.APR.19
CITY		26.APR.19

Project Status
PROJECT ISSUE DATE: Project Issue Date
CITY OF LOS ANGELES

VERTICAL CONTROL:
HORIZONTAL:

SHEET TITLE–24

PROJECT STUDIO CITY GYMNASIUM

ADDRESS 12621 RYE STREET, STUDIO CITY, CA 91604

WORK ORDER E170267B

PLAN FILE

DRAWING **M002**

SHEET 143 OF SHEET 211

T:\6007\STUDIO CITY-REC CENTER\07-29-2019

Project Name:	Studio City Recreation Center	NRCC-PRF-01-E	Page 16 of 25
Project Address:	12621 Rye St Studio City 91604	Calculation Date/Time:	09:55, Thu, Jun 13, 2019
Compliance Scope:	NewComplete	Input File Name:	Studio City Recreation Center (Gym)_NR T24 Compliance Report_06-13-2019 (With NV Fan).cibd16x

T. UNMET LOAD HOURS

Thermal Zone Name	Cooling Unmet Load Hour Limit for Thermal Zone	Proposed Cooling Unmet Load Hours	Heating Unmet Load Hour Limit for Thermal Zone	Proposed Heating Unmet Load Hours
1-Lobby 100	150	1151	150	73.5
2-Office 101	150	700	150	11.75
3-Gymnasium 104	150	172.75	150	58.25
12-Kitchen 201	150	1234	150	0

U. ENERGY USE SUMMARY

Energy Component	Standard Design Site (MWh)	Proposed Design Site (MWh)	Margin (MWh)	Standard Design Site (MBtu)	Proposed Design Site (MBtu)	Margin (MBtu)
Space Heating	0.0	1.5	--	67.1	--	--
Space Cooling	78.9	50.3	28.6	--	--	--
Indoor Fans	39.0	28.4	10.6	--	--	--
Heat Rejection	--	--	--	--	--	--
Pumps & Misc.	1.7	--	--	--	--	--
Domestic Hot Water	--	7.9	--	171.4	--	--
Indoor Lighting	29.4	17.7	11.7	--	--	--
COMPLIANCE TOTAL	**149.0**	**105.8**	**43.2**	**238.5**	**0.0**	**--**
Receptacle	25.2	25.2	0.0	--	--	--
Process	51.0	51.0	0.0	--	--	--
Other Ltg	--	--	--	--	--	--
Process Motors	0.4	0.4	0.0	--	--	--
TOTAL	**225.6**	**182.4**	**43.2**	**238.5**	**0.0**	**--**

Project Name:	Studio City Recreation Center	NRCC-PRF-01-E	Page 13 of 25
Project Address:	12621 Rye St Studio City 91604	Calculation Date/Time:	09:55, Thu, Jun 13, 2019
Compliance Scope:	NewComplete	Input File Name:	Studio City Recreation Center (Gym)_NR T24 Compliance Report_06-13-2019 (With NV Fan).cibd16x

O. EQUIPMENT CONTROLS § 120.2 — Confirmed

1. Equip Name	2. Equip Type	3. Controls	Pass	Fail
		No Heat Recovery		
Restrooms123	Exhaust	NA	☐	☐
Studio City Recreation Ce1 - SHW	Service Hot Water, Primary Only	Fixed Temperature Control, No DDC No Heat Recovery	☐	☐

P. SYSTEM DISTRIBUTION SUMMARY § 120.4/ § 140.4(l)

		Dry System Distribution					Confirmed	
1. Equip Name	2. Equip Type	3. Duct Leakage and Sealing Required per 140.4(l)	4. Duct Leakage will be verified per NA1 and NA2	5. Ducts: Insulation R-Value	5. Ducts: Location	6. Status[1]	Pass	Fail
FC-3/1 (Lobby 100)	SZHP	No	No	8	Unconditioned	N	☐	☐
FC-1/1-2 (Office 101)	SZHP	No	No	8	Unconditioned	N	☐	☐
AHU1 & 2 W/ VRF HP (Gymna	PVAV	No	No	8	Unconditioned	N	☐	☐
FC-2/1 (Comm. Room 107)	SZAC	No	No	8	Unconditioned	N	☐	☐
FC-2/2 (Elec. Room 109)	SZAC	No	No	8	Unconditioned	N	☐	☐
FC-2/1-6 (Community Room	SZHP	No	No	8	Unconditioned	N	☐	☐
FC-2/3 (Kitchen 201)	SZHP	No	No	8	Unconditioned	N	☐	☐

[1] *Status: N - New, E – Existing*

Does the Project Include Zonal Systems? (If "Yes", see NRCC-PRF-MCH-DETAILS for system information)	No
Does the Project Include a Solar Hot Water System? (If "Yes", see NRCC-PRF-MCH-DETAILS for system information)	No
Multifamily or Hotel/ Motel Occupancy? (If "Yes", see NRCC-PRF-MCH-DETAILS for DHW system information)	No

Project Name:	Studio City Recreation Center	NRCC-PRF-01-E	Page 10 of 25
Project Address:	12621 Rye St Studio City 91604	Calculation Date/Time:	09:55, Thu, Jun 13, 2019
Compliance Scope:	NewComplete	Input File Name:	Studio City Recreation Center (Gym)_NR T24 Compliance Report_06-13-2019 (With NV Fan).cibd16x

M. HVAC SYSTEM SUMMARY (see NRCC-PRF-MCH-DETAILS for more information) § 110.1 / § 110.2

Dry System Equipment [1] (Fan & Economizer info included below in Table N) — Confirmed

1. Equip Name	2. Equip Type	3. System Type (Simple [2] or Complex [3])	4. Qty	5. Total Heating Output (kBtu/h)	6. Supp Heat Source (Y/N)	7. Supp Heat Output (kBtu/h)	8. Total Cooling Output (kBtu/h)	9. Efficiency: Cooling	9. Efficiency: Heating	10. Acceptance Testing Required? (Y/N) [4]	11. Status[5]	Pass	Fail
Restrooms123	Exhaust ()	Simple	1	0	No	0	0	NA	NA	No	N	☐	☐

[1] *Dry System Equipment includes furnaces, air handling units, heat pumps, etc.*
[2] *Simple Systems must complete NRCC-CXR-03-E commissioning design review form*
[3] *Complex Systems must complete NRCC-CXR-04-E commissioning design review form*
[4] *A summary of which acceptance tests are applicable is provided in NRCC-PRF-MCH-DETAILS*
[5] *Status: N – New, A – Altered, E – Existing*

Wet System Equipment [1] — Pumps — Confirmed

12. Equip Name	13. Equip Type	14. Qty	15. Vol (gal)	16. Rated Capacity (kBtu/h)	17. Efficiency	18. Standby Loss	19. Tank Ext. R Value	20. Qty	21. GPM	22. HP	23. VSD (Y/N)	24. Status[2]	Pass	Fail
Rheem HPLD802	Heat-Pump Packaged	1	80.00	1.2 (kW)	UEF: 3.70	NA	NA	NA	NA	NA	NA	N	☐	☐

[1] *Wet System Equipment includes boilers, chillers, cooling towers, water heaters, etc.*
[2] *Status: N – New, A – Altered, E – Existing*

Discrepancy between modeled and designed equipment sizing? (if "Yes", see Table F. "Additional Remarks" for an explanation)	No

BUREAU OF ENGINEERING — OFFICIAL RECORD

Project Name:	Studio City Recreation Center	NRCC-PRF-01-E	Page 17 of 25
Project Address:	12621 Rye St Studio City 91604	Calculation Date/Time:	09:55, Thu, Jun 13, 2019
Compliance Scope:	NewComplete	Input File Name:	Studio City Recreation Center (Gym)_NR T24 Compliance Report_06-13-2019 (With NV Fan).cibd16x

DOCUMENTATION AUTHOR'S DECLARATION STATEMENT § 10-103

I certify that this Certificate of Compliance documentation is accurate and complete.

Documentation Author Name:		Signature:	James H Shwe
Company: Maroko & Shwe, Inc.			
Address: 1106 B. West Magnolia Blvd		Signature Date:	06/13/2019
City/State/Zip: Burbank CA 91506		CEA Identification (If applicable):	
Phone: (818) 840 0280			

RESPONSIBLE PERSON'S DECLARATION STATEMENT

I certify the following under penalty of perjury, under the laws of the State of California:

1. I hereby affirm that I am eligible under the provisions of Division 3 of the Business and Professions Code to sign this document as the person responsible for its preparation; and that I am licensed in the State of California as a civil engineer, mechanical engineer, electrical engineer, or I am a licensed architect.
2. I affirm that I am eligible under the provisions of Division 3 of the Business and Professions Code by section 5537.2 or 6737.3 to sign this document as the person responsible for its preparation; and that I am a licensed contractor performing this work.
3. I affirm that I am eligible under Division 3 of the Business and Professions Code to sign this document because it pertains to a structure or type of work described as exempt pursuant to Business and Professions Code Sections 5537, 5538 and 6737.1.

Responsible Envelope Designer Name: Department of Public Works		**Signature:**	
Company: City of Los Angeles			
Address:		Date Signed:	
City/State/Zip: Los Angeles California		Declaration Statement Type:	
Phone:		Title:	License #:
Responsible Lighting Designer Name: Silver Roth & Associates		**Signature:**	Felix Roth
Company:			
Address: 511 S Fairfax Ave, Los Angeles		Date Signed:	06/13/2019
City/State/Zip: CA 90036		Declaration Statement Type:	
Phone: (323) 933-3700		Title: ELECTRICAL ENGINEER	License #: E 012941
Responsible Mechanical Designer Name: James H. Shwe		**Signature:**	James H Shwe
Company: Maroko & Shwe, Inc.			
Address: 1106 B. West Magnolia Blvd		Date Signed:	06/13/2019
City/State/Zip: Burbank CA 91506		Declaration Statement Type:	
Phone: (818) 840-0280		Title: MEOR	License #: M 26903

Project Name:	Studio City Recreation Center	NRCC-PRF-01-E	Page 14 of 25
Project Address:	12621 Rye St Studio City 91604	Calculation Date/Time:	09:55, Thu, Jun 13, 2019
Compliance Scope:	NewComplete	Input File Name:	Studio City Recreation Center (Gym)_NR T24 Compliance Report_06-13-2019 (With NV Fan).cibd16x

Q. INDOOR CONDITIONED LIGHTING GENERAL INFO (see NRCC-PRF-LTI-DETAILS for more info)[3] § 140.6

1. Occupancy Type [1]	2. Conditioned Floor Area [2] (ft²)	3. Installed Lighting Power (Watts)	4. Lighting Control Credits (Watts)	5. Additional (Custom) Allowance: Area Category Footnotes (Watts)	5. Additional (Custom) Allowance: Tailored Method (Watts)	Confirmed: Pass	Confirmed: Fail
Lobby, Main Entry	332	616	62	0	0	☐	☐
Office (Greater than 250 square feet in floor area)	421	400	40	0	0	☐	☐
Gymnasium/Sports Arena	7,609	3,492	349	0	0	☐	☐
Electrical, Mechanical, Telephone Rooms	262	46	0	0	0	☐	☐
Convention, Conference, Multipurpose and Meeting Center Areas	1,438	960	72	0	0	☐	☐
Kitchen, Commercial Food Preparation	197	236	0	0	0	☐	☐
Building Totals:	**10,259**	**5,750**	**523**	**0**	**0**		

[1] *See Table 140.6-C*
[2] *See NRCC-LTI-01-E for unconditioned spaces*
[3] *Lighting information for existing spaces modeled is not included in the table*

R. INDOOR CONDITIONED LIGHTING SCHEDULE (Adapted from NRCC-LTI-01-E)[1] § 130.0

Luminaire Schedule (includes all permanent installed lighting in conditioned space, and portable lighting over 0.3 w/ft² in offices) — Installed Watts (Conditioned) — Confirmed

Name or Item Tag	Complete Luminaire Description (i.e., 3-lamp fluorescent troffer, F32T8, one dimmable electronic ballast)	Watts per luminaire	How Wattage is Determined: CEC Default from NA8	How Wattage is Determined: According to §130.0(c)	Total Number Luminaires	Installed Watts	Pass	Fail
L-1	B- LED PANDANT -154W	154	Yes	No	4	616	☐	☐
L-2	C1- LED 8' LINEAR -80W	80	Yes	No	2	160	☐	☐
L-3	C2 - LED 6' LINEAR -60 W	60	Yes	No	4	240	☐	☐
L-4	A-LED PANDANT -194W	194	Yes	No	18	3,492	☐	☐

Project Name:	Studio City Recreation Center	NRCC-PRF-01-E	Page 11 of 25
Project Address:	12621 Rye St Studio City 91604	Calculation Date/Time:	09:55, Thu, Jun 13, 2019
Compliance Scope:	NewComplete	Input File Name:	Studio City Recreation Center (Gym)_NR T24 Compliance Report_06-13-2019 (With NV Fan).cibd16x

N. ECONOMIZER & FAN SYSTEMS SUMMARY[1] § 140.4 — Confirmed

1. Equip Name	2. Outside Air: CFM	3. Supply Fan: CFM	HP	BHP	TSP (inch WC)	Control	4. Return Fan: CFM	HP	BHP	TSP (inch WC)	Control	5. Economizer Type (if present)	Pass	Fail
FC-3/1 (Lobby 100)	332	1000	0.208	0.208	0.66	ConstantVolume	NA	NA	NA	NA	NA	NoEconomizer	☐	☐
FC-1/1-2 (Office 101)	32	350	0.017	0.017	0.15	ConstantVolume	NA	NA	NA	NA	NA	DifferentialDryBulb	☐	☐
AHU1 & 2 W/ VRF HP (Gymna	3805	7000	7.020	7.020	3.82	VariableSpeedDrive	NA	NA	NA	NA	NA	DifferentialEnthalpy	☐	☐
FC-2/1 (Comm. Room 107)	18	705	0.048	0.048	0.21	ConstantVolume	NA	NA	NA	NA	NA	DifferentialDryBulb	☐	☐
FC-2/2 (Elec. Room 109)	21	705	0.048	0.048	0.21	ConstantVolume	NA	NA	NA	NA	NA	DifferentialDryBulb	☐	☐
FC-2/1-6 (Community Room	240	530	0.043	0.043	0.25	ConstantVolume	NA	NA	NA	NA	NA	DifferentialDryBulb	☐	☐
FC-2/3 (Kitchen 201)	30	490	0.043	0.043	0.28	ConstantVolume	NA	NA	NA	NA	NA	DifferentialDryBulb	☐	☐

[1] *Mechanical ventilation calculations and exhaust fans are included in the NRCC-PRF-MCH-DETAILS section*

O. EQUIPMENT CONTROLS § 120.2 — Confirmed

1. Equip Name	2. Equip Type	3. Controls	Pass	Fail
FC-3/1 (Lobby 100)	SZHP	No DCV Controls No Economizer No Supply Air Temp. Control No Optimum Start No Evaporative Cooler No Heat Recovery	☐	☐

Project Name:	Studio City Recreation Center	NRCC-PRF-01-E	Page 18 of 25
Project Address:	12621 Rye St Studio City 91604	Calculation Date/Time:	09:55, Thu, Jun 13, 2019
Compliance Scope:	NewComplete	Input File Name:	Studio City Recreation Center (Gym)_NR T24 Compliance Report_06-13-2019 (With NV Fan).cibd16x

NRCC-PRF-ENV-DETAILS -SECTION START-

A. OPAQUE SURFACE ASSEMBLY DETAILS — Confirmed

1. Surface Name	2. Surface Type	3. Description of Assembly Layers	4. Notes	Pass	Fail
Metal Wall with Rigid Ins7	ExteriorWall	Stucco - 7/8 in. Vapor permeable felt - 1/8 in. Compliance Insulation R7.10 Metal framed wall, 16in. OC, S.Sin., R-19 Gypsum Board - 1/2 in.		☐	☐
Slab On Grade_BuroHappold16	UndergroundFloor	Slab Type = UnheatedSlabOnGrade Insulation Orientation = None Insulation R-Value = R0		☐	☐
Metal Roof with Rigid and18	Roof	Single Ply Roofing - 1/4 in. Cellular polyisocyanurate (unfaced) - 1 in. R5.9 Compliance Insulation R24.80 Metal framed roof, 16in. OC, S.Sin., R-11 Gypsum Board - 1/2 in.		☐	☐
R-0 Wall Metal Stud64	InteriorWall	Stucco - 7/8 in. Vapor permeable felt - 1/8 in. Metal framed wall, 16in. OC, 3.5in., R-0 Gypsum Board - 1/2 in.		☐	☐

B. OVERHANG DETAILS (Adapted from NRCC-ENV-02-E)

This Section Does Not Apply

C. OPAQUE DOOR SUMMARY — Confirmed

1. Opaque Door Assembly Name / Tag or I.D.	2. Door Type	3. Certification Method	4. Operation	5. Area	6. Overall U-factor	7. Status[1]	Pass	Fail
Metal Door49	MetalUninsulatedDoubleLayerDoor	DefaultPerformance	Swinging	147	0.700	N	☐	☐
Wood Door73	WoodGreaterThanOrEqualTo1.75inThickDoor	DefaultPerformance	Swinging	210	0.500	N	☐	☐

[1] *Status: N - New, A – Altered, E – Existing*

Project Name:	Studio City Recreation Center	NRCC-PRF-01-E	Page 15 of 25
Project Address:	12621 Rye St Studio City 91604	Calculation Date/Time:	09:55, Thu, Jun 13, 2019
Compliance Scope:	NewComplete	Input File Name:	Studio City Recreation Center (Gym)_NR T24 Compliance Report_06-13-2019 (With NV Fan).cibd16x

R. INDOOR CONDITIONED LIGHTING SCHEDULE (Adapted from NRCC-LTI-01-E)[1] § 130.0

Luminaire Schedule (includes all permanent installed lighting in conditioned space, and portable lighting over 0.3 w/ft² in offices) — Installed Watts (Conditioned) — Confirmed

Name or Item Tag	Complete Luminaire Description (i.e., 3-lamp fluorescent troffer, F32T8, one dimmable electronic ballast)	Watts per luminaire	How Wattage is Determined: CEC Default from NA8	How Wattage is Determined: According to §130.0(c)	Total Number Luminaires	Installed Watts	Pass	Fail
L-5	E- LED STRIP LIGHT 23W	23	Yes	No	1	23	☐	☐
L-6	E- LED STRIP LIGHT 23W	23	Yes	No	1	23	☐	☐
L-7	C1- LED 8' LINEAR -80W	80	Yes	No	9	720	☐	☐
L-8	C1E- LED EM 8' LINEAR - 80W	80	Yes	No	3	240	☐	☐

[1] *If lighting power densities were used in the compliance model Building Departments will need to check prescriptive forms for Luminaire Schedule details.*

S1. COVERED PROCESS SUMMARY – ENCLOSED PARKING GARAGES § 140.9

This Section Does Not Apply

S2. COVERED PROCESS SUMMARY – COMMERCIAL KITCHENS § 140.9

Space Name	Exhaust Hood Style	Exhaust Hood Duty	Exhaust Length (ft)	Exhaust Flow Rate (cfm)	Confirmed: Pass	Confirmed: Fail
S-12-Kitchen 201		Light			☐	☐
		Light			☐	☐
		Light			☐	☐
		Light			☐	☐
		Light			☐	☐

S3. COVERED PROCESS SUMMARY – COMPUTER ROOMS § 140.9

This Section Does Not Apply

S4. COVERED PROCESS SUMMARY – LABORATORY EXHAUSTS § 140.9

This Section Does Not Apply

Project Name:	Studio City Recreation Center	NRCC-PRF-01-E	Page 12 of 25
Project Address:	12621 Rye St Studio City 91604	Calculation Date/Time:	09:55, Thu, Jun 13, 2019
Compliance Scope:	NewComplete	Input File Name:	Studio City Recreation Center (Gym)_NR T24 Compliance Report_06-13-2019 (With NV Fan).cibd16x

O. EQUIPMENT CONTROLS § 120.2 — Confirmed

1. Equip Name	2. Equip Type	3. Controls	Pass	Fail
FC-1/1-2 (Office 101)	SZHP	No DCV Controls Differential Drybulb Economizer No Supply Air Temp. Control No Optimum Start No Evaporative Cooler No Heat Recovery	☐	☐
AHU1 & 2 W/ VRF HP (Gymna	PVAV	1 Zones With CO2Sensor Vent. Control, DDC Controls Differential Enthalpy Economizer Warmest Zone Supply Air Temp. Reset Optimum Start No Evaporative Cooler No Heat Recovery	☐	☐
FC-2/1 (Comm. Room 107)	SZAC	No DCV Controls Differential Drybulb Economizer No Supply Air Temp. Control No Optimum Start No Evaporative Cooler No Heat Recovery	☐	☐
Future Battery Storage 1085	Exhaust	NA	☐	☐
FC-2/2 (Elec. Room 109)	SZAC	No DCV Controls Differential Drybulb Economizer No Supply Air Temp. Control No Optimum Start No Evaporative Cooler No Heat Recovery	☐	☐
FC-2/1-6 (Community Room	SZHP	1 Zones With CO2Sensor Vent. Control Differential Drybulb Economizer No Supply Air Temp. Control No Optimum Start No Evaporative Cooler No Heat Recovery	☐	☐
FC-2/3 (Kitchen 201)	SZHP	No DCV Controls Differential Drybulb Economizer No Supply Air Temp. Control No Optimum Start No Evaporative Cooler	☐	☐

THE CITY OF LOS ANGELES OR ITS OFFICERS OR AGENTS SHALL NOT BE RESPONSIBLE FOR THE ACCURACY OR COMPLETENESS OF ELECTRONIC COPIES OF THIS PLAN

SHEET:

FILE PATH:

TTLB TEMPLATE REVISION DATE:

SHEET ISSUE DATE:

REVISION DATES (DESIGN STAGE)

BUREAU OF ENGINEERING

ENGINEERING — CITY OF LOS ANGELES

NO.	REVISION DESCRIPTION	DATE	BY

BUILDING - RP-300106

INDEX

REGISTERED PROFESSIONAL ENGINEER — James H. Shwe — No. 26903 — Renewal: 9/30/20 — MECHANICAL — STATE OF CALIFORNIA

PUBLIC WORKS

DEPARTMENT OF PUBLIC WORKS

TED ALLEN, PE

ARCHITECTURAL

ARCHITECT/ENGINEER - JAMES H SHWE — LIC. NO.- M 26903

CITY	DESIGNED BY:	J.S
DATE 26.APR.19	DRAWN BY:	S.W.L
26.APR.19	CHECKED BY:	J.S/N.W
26.APR.19	APPROVED BY:	MAHMOOD KARIMZADEH, AIA, DEPUTY CITY ENGINEER
26.APR.19		

Project Status

PROJECT ISSUE DATE: Project Issue Date

CITY OF LOS ANGELES

VERTICAL CONTROL:

HORIZONTAL

SHEET: TITLE-24

PROJECT: STUDIO CITY GYMNASIUM

ADDRESS: 12621 RYE STREET, STUDIO CITY, CA 91604

WORK ORDER E170267B

PLAN FILE

DRAWING M003

SHEET 144 OF SHEET 211

16007:\STUDIO CITY-REC CENTER\07-29-2019

Project Name:	Studio City Recreation Center	NRCC-PRF-01-E	Page 25 of 25
Project Address:	12621 Rye St Studio City 91604	Calculation Date/Time:	09:55, Thu, Jun 13, 2019
Compliance Scope:	NewComplete	Input File Name:	Studio City Recreation Center (Gym)_NR T24 Compliance Report_06-13-2019 (With NV Fan).cibd16x

6. Floor Display and Task Lighting

This Section Does Not Apply

7. Combined Ornamental and Special Effects Lighting

This Section Does Not Apply

8. Very Valuable Merchandise

This Section Does Not Apply

H. INDOOR & OUTDOOR LIGHTING ACCEPTANCE TESTS & FORMS (Adapted from NRCC-LTI-01-E and NRCC-LTO-01-E) **§ 130.4**

Declaration of Required Acceptance Certificates (NRCA) –Acceptance Certificates that must be verified in the field. (Retain copies and verify forms are completed and signed to post in field for Field Inspector to verify).

Test Description		Indoor			Outdoor	Confirmed	
		NRCA-LTI-02-A	NRCA-LTI-03-A	NRCA-LTI-04-A	NRCA-LTO-02-A	Pass	Fail
Equipment Requiring Testing or Verification	# of units	Occ Sensors / Auto Time Switch	Auto Daylight	Demand Responsive	Outdoor Controls		
Occupant Sensors	0	☒	☐	☐	☐	☐	☐
Automatic Time Switch	0	☒	☐	☐	☐	☐	☐
Automatic Daylighting	0	☐	☒	☐	☐	☐	☐
Demand Responsive	1	☐	☐	☒	☐	☐	☐
Outdoor Controls	0	☐	☐	☐	☐	☐	☐

Project Name:	Studio City Recreation Center	NRCC-PRF-01-E	Page 22 of 25
Project Address:	12621 Rye St Studio City 91604	Calculation Date/Time:	09:55, Thu, Jun 13, 2019
Compliance Scope:	NewComplete	Input File Name:	Studio City Recreation Center (Gym)_NR T24 Compliance Report_06-13-2019 (With NV Fan).cibd16x

G. MECHANICAL HVAC ACCEPTANCE TESTS & FORMS *(Adapted from 2016-NRCC-MCH-01-E)* **§ RA4**

Declaration of Required Acceptance Certificates (NRCA) – Acceptance Certificates that may be submitted. (Retain copies and verify forms are completed and signed to post in field for Field Inspector to verify).

Test Description		MCH-02A	MCH-03A	MCH-04A	MCH-05A	MCH-06A	MCH-07A	MCH-08A	MCH-09A	MCH-10A	MCH-11A	MCH-12A	MCH-13A	MCH-14A	MCH-15A	MCH-16A	MCH-17A	MCH-18A	Confirmed	
Equipment Requiring Testing or Verification	# of units	Outdoor Air	Single Zone Unitiary	Air Dist. Ducts	Economizer Controls	DCV	Supply Fan VAV	Valve leakage	Supply Water Temp. Reset	Hyd. Variable Flow Control	Auto Demand Shed Control	FDD for DX Units	Auto FDD for Air & Zone	Dist. Energy Storage DX AC	TES Systems	Supply Air Temp. Reset	Condenser Water Reset Controls	ECMS	Pass	Fail
FC-1/1-2 (Office 101)	2	X	X	--	X	--	X	--	--	--	--	--	--	--	--	--	--	--	☐	☐
AHU1 & 2 W/ VRF HP (Gymna	2	X	--	--	X	X	X	--	--	--	X	X	--	--	--	X	--	--	☐	☐
FC-2/1 (Comm. Room 107)	1	X	X	--	X	--	X	--	--	--	--	--	--	--	--	--	--	--	☐	☐
Future Battery Storage 1085	1	--	--	--	--	--	--	--	--	--	--	--	--	--	--	--	--	--	☐	☐
FC-2/2 (Elec. Room 109)	1	X	X	--	X	--	X	--	--	--	--	--	--	--	--	--	--	--	☐	☐
FC-2/1-6 (Community Room	6	X	X	--	X	X	X	--	--	--	--	--	--	--	--	--	--	--	☐	☐
FC-2/3 (Kitchen 201)	1	X	X	--	X	--	X	--	--	--	--	--	--	--	--	--	--	--	☐	☐
Restrooms123	1	--	--	--	--	--	--	--	--	--	--	--	--	--	--	--	--	--	☐	☐

Project Name:	Studio City Recreation Center	NRCC-PRF-01-E	Page 19 of 25
Project Address:	12621 Rye St Studio City 91604	Calculation Date/Time:	09:55, Thu, Jun 13, 2019
Compliance Scope:	NewComplete	Input File Name:	Studio City Recreation Center (Gym)_NR T24 Compliance Report_06-13-2019 (With NV Fan).cibd16x

NRCC-PRF-MCH-DETAILS -SECTION START-

A. MECHANICAL VENTILATION AND REHEAT *(Adapted from 2016-NRCC-MCH-03-E)* **Confirmed**

CONDITIONED ZONE NAME	1. DESIGN AIR FLOWS						2. VENTILATION (§ 120.1)										Confirmed	
	HEATING/COOLING SYSTEM ID	DESIGN PRIMARY AIR FLOW (CFM)	DESIGN PRIMARY AIR FLOW FRACTION	MINIMUM PRIMARY AIR FLOW FRACTION	MAXIMUM HEATING AIR FLOW (CFM)	MAXIMUM HEATING AIR FLOW FRACTION	DDC CONTROL (Y/N)	VENT SYSTEM ID	CONDITIONED AREA (ft2)	MIN. VENT RATE PER AREA (CFM/ft2)	DESIGN NUM. OF PEOPLE	MIN. VENT PER PERSON (CFM/person)	REQ'D VENT AIR FLOW (CFM)	DESIGN VENT AIR FLOW (CFM)	TRANSFER AIRFLOW (CFM)	DCV (Y/N)	Operate ToExceedAnnual § 140.4(e)1(TVN)	Pass	Fail
1-Lobby 100	FC-3/1 (Lobby 100)	1,000	NA	NA	NA	NA	N	FC-3/1 (Lobby 100)	332	NA	22.13	15.00	332	332	NA	N	NA	☐	☐
2-Office 101	FC-1/1-2 (Office 101)	350	NA	NA	NA	NA	N	FC-1/1-2 (Office 101)	421	NA	4.21	15.00	63	63	NA	N	NA	☐	☐
3-Gymnasium 104	AHU1 & 2 W/ VRF HP (Gymna	5,710	1,142	0.20	NA	NA	Y	AHU1 & 2 W/ VRF HP (Gymna	7,609	NA	507.29	15.00	7,609	7,609	NA	Y	NA	☐	☐
8-Comm. Room 107	FC-2/1 (Comm. Room 107)	705	NA	NA	NA	NA	N	FC-2/1 (Comm. Room 107)	120	NA	0.36	50.00	18	18	NA	N	NA	☐	☐
10-Elec. Room 109	FC-2/2 (Elec. Room 109)	705	NA	NA	NA	NA	N	FC-2/2 (Elec. Room 109)	142	NA	0.43	50.00	21	21	NA	N	NA	☐	☐
11-Community Room 200	FC-2/1-6 (Community Room	530	NA	NA	NA	NA	N	FC-2/1-6 (Community Room	1,438	NA	95.87	15.00	1,438	1,438	NA	Y	NA	☐	☐
12-Kitchen 201	FC-2/3 (Kitchen 201)	490	NA	NA	NA	NA	N	FC-2/3 (Kitchen 201)	197	NA	0.98	30.00	30	30	NA	N	NA	☐	☐
								TOTAL	10,259		631.27		9,511	9,511	NA			☐	☐

ENVELOPE MANDATORY MEASURES: NONRESIDENTIAL **ENV-MM**

Project Name	Date
Studio City Recreation Center _ With NV Fan	*6/13/2019*

DESCRIPTION

Building Envelope Measures:

§110.8(a):	Installed insulating material shall have been certified by the manufacturer to comply with the California Quality Standards for insulating material, Title 20 Chapter 4, Article 3.
§110.8(c):	All Insulating Materials shall be installed in compliance with the flame spread rating and smoke density requirements of Sections 2602 and 707 of Title 24, Part 2.
§110.8(g):	Heated slab floors shall be insulated according to the requirements in Table 110.8-A.
§110.7(a):	All Exterior Joints and openings in the building that are observable sources of air leakage shall be caulked, gasketed, weatherstripped or otherwise sealed.
§110.6(a):	Manufactured fenestration products and exterior doors shall have air infiltration rates not exceeding 0.3 cfm/ft.² of window area, 0.3 cfm/ft.² of door area for residential doors, 0.3 cfm/ft.² of door area for nonresidential single doors (swinging and sliding), and 1.0 cfm/ft.² for nonresidential double doors (swinging).
§110.6(a):	Fenestration U-factor shall be rated in accordance with NFRC 100, or the applicable default U-factor.
§110.6(a) :	Fenestration SHGC shall be rated in accordance with NFRC 200, or NFRC 100 for site-built fenestration, or the applicable default SHGC.
§110.6(b):	Site Constructed Doors, Windows and Skylights shall be caulked between the unit and the building, and shall be weatherstripped (except for unframed glass doors and fire doors).
§120.7(a):	The opaque portions of the roof/ceiling that separates conditioned spaces from unconditioned spaces or ambient air shall meet the applicable U-Factor requirements as follows: **Metal Building-** The weighted average U-factor of the roof assembly shall not exceed 0.098. **Wood Framed and Others-** The weighted average U-factor of the roof assembly shall not exceed 0.075.
§120.7(b):	The opaque portions of walls that separate conditioned spaces from unconditioned spaces or ambient air shall meet the applicable U-factor as follows: **Metal Building-** The weighted average U-factor of the wall assembly shall not exceed 0.113. **Metal Framed-** The weighted average U-factor of the wall assembly shall not exceed 0.151. **Light Mass Walls-** A 6 inch or greater Hollow Core Concrete Masonry Unit shall have a U-factor not to exceed 0.440. **Heavy Mass Walls-** An 8 inch or greater Hollow Core Concrete Masonry Unit shall have a U-factor not to exceed 0.690. **Wood Framed and Others-** The weighted average U-factor of the wall assembly shall not exceed 0.110. **Spandrel Panels and Opaque Curtain Wall-** The weighted average U-factor of the spandrel panels and opaque curtain wall assembly shall not exceed 0.280. **Demising Walls-**. The opaque portions of framed demising walls shall meet the requirements of Item A or B below: A. Wood framed walls shall be insulated to meet a U-factor not greater than 0.099. B. Metal Framed walls shall be insulated to meet a U-factor not greater than 0.151.
§120.7(c):	The opaque portions of floors and soffits that separate conditioned spaces from unconditioned spaces or ambient air shall meet the applicable U-Factor requirements as follows: **Raised Mass Floors-** Shall have a minimum of 3 inches of lightweight concrete over a metal deck or the weighted average U-factor of the floor assembly shall not exceed 0.269. **Other Floors-**The weighted average U-factor of the floor assembly shall not exceed 0.071.

Project Name:	Studio City Recreation Center	NRCC-PRF-01-E	Page 23 of 25
Project Address:	12621 Rye St Studio City 91604	Calculation Date/Time:	09:55, Thu, Jun 13, 2019
Compliance Scope:	NewComplete	Input File Name:	Studio City Recreation Center (Gym)_NR T24 Compliance Report_06-13-2019 (With NV Fan).cibd16x

H. EVAPORATIVE COOLER SUMMARY

This Section Does Not Apply

NRCC-PRF-LTI-DETAILS -SECTION START-

A. INDOOR CONDITIONED LIGHTING CONTROL CREDITS (Adapted from NRCC-LTI-02-E) **§ 140.6**

Lighting Control Credits Schedule (includes all lighting controls installed in conditioned space for compliance credit per §140.6(a)2 and Table 140.6-A)

Location in Building	Occupancy Type (must meet requirements of Table 140.6-A)	Type/Description of Lighting Control (i.e., partial on occupancy sensor, manual dimming, etc.)	# of Units	Control Credit Calculation: Watts of Controlled Lighting	Control Credit Calculation: Power Adjustment Factor	Control Credit Calculation: Control Credit Watts	If Acceptance Test Required	Confirmed: Pass	Confirmed: Fail
S-1-Lobby 100	Lobby, Main Entry	DaylightDimmingPlusOff	1		0.10	62	X	☐	☐
S-2-Office 101	Office (Greater than 250 square feet in floor area)	DaylightDimmingPlusOff	1		0.10	16	X	☐	☐
S-2-Office 101	Office (Greater than 250 square feet in floor area)	DaylightDimmingPlusOff	1		0.10	24	X	☐	☐
S-3-Gymnasium 104	Gymnasium/Sports Arena	DaylightDimmingPlusOff	1		0.10	349	X	☐	☐
S-8-Comm. Room 107	Electrical, Mechanical, Telephone Rooms	- none specified -	1		0.00	0		☐	☐
S-10-Elec. Room 109	Electrical, Mechanical, Telephone Rooms	- none specified -	1		0.00	0		☐	☐
S-11-Community Room 200	Convention, Conference, Multipurpose and Meeting Center Areas	DaylightDimmingPlusOff	1		0.10	72	X	☐	☐
S-11-Community Room 200	Convention, Conference, Multipurpose and Meeting Center Areas	- none specified -	1		0.00	0		☐	☐

B. INDOOR CONDITIONED LIGHTING MANDATORY LIGHTING CONTROLS (Adapted from NRCC-LTI-02-E) **§ 130.1**

This Section Does Not Apply

§130.1(a) = Manual area controls; §130.0(b) = Multi Level; §130.1(c) = Auto Shut-Off; §130.1(d) = Mandatory Daylight; §130.1(e) = Demand Responsive

C. TAILORED METHOD CONDITIONED LIGHTING POWER ALLOWANCE SUMMARY AND CHECKLIST (Adapted from NRCC-LTI-04-E) **§ 140.6**

General lighting power (see Table D)	0

Project Name:	Studio City Recreation Center	NRCC-PRF-01-E	Page 20 of 25
Project Address:	12621 Rye St Studio City 91604	Calculation Date/Time:	09:55, Thu, Jun 13, 2019
Compliance Scope:	NewComplete	Input File Name:	Studio City Recreation Center (Gym)_NR T24 Compliance Report_06-13-2019 (With NV Fan).cibd16x

B. ZONAL SYSTEM AND TERMINAL UNIT SUMMARY **§ 140.4** **Confirmed**

1. System ID	2. System Type	3. Qty	4. Rated Capacity (kBtuh): Heating	4. Rated Capacity (kBtuh): Cooling	5. Economizer	6. Zone Name	7. Airflow (cfm): Design	7. Airflow (cfm): Min.	7. Airflow (cfm): Min. Ratio	8. Fan: BHP	8. Fan: Cycles	8. Fan: ECM Motor	Pass	Fail
1-Lobby 100-Trm	Uncontrolled	1	NA	NA	NA	1-Lobby 100	1000	NA	NA	NA	NA	☐	☐	☐
2-Office 101-Trm	Uncontrolled	1	NA	NA	NA	2-Office 101	350	NA	NA	NA	NA	☐	☐	☐
3-Gymnasium 104-Trm	VAVNoReheatBox	2	NA	NA	NA	3-Gymnasium 104	5710	1142	0.20	NA	NA	☐	☐	☐
8-Comm. Room 107-Trm	Uncontrolled	1	NA	NA	NA	8-Comm. Room 107	705	NA	NA	NA	NA	☐	☐	☐
10-Elec. Room 109-Trm	Uncontrolled	1	NA	NA	NA	10-Elec. Room 109	705	NA	NA	NA	NA	☐	☐	☐
11-Community Room 200-Trm	Uncontrolled	6	NA	NA	NA	11-Community Room 200	530	NA	NA	NA	NA	☐	☐	☐
12-Kitchen 201-Trm	Uncontrolled	1	NA	NA	NA	12-Kitchen 201	490	NA	NA	NA	NA	☐	☐	☐

C. EXHAUST FAN SUMMARY **Confirmed**

1. System ID	2. Zone Name	3. Qty	4. CFM	5. Motor BHP	6. Total Static Pressure (in H20)	Pass	Fail
Future Battery Storage 1085	9-Future Battery Storage 10	1	150	0.030	0.76	☐	☐
Restrooms123	14-Restrooms	1	650	0.054	0.32	☐	☐
3-Gymnasium 104 PropExhFan	3-Gymnasium 104	2	6400	NA	0.521392	☐	☐
9-Future Battery Storage 10 PropExhFan	9-Future Battery Storage 10	1	150	NA	0.801541	☐	☐
11-Community Room 200 PropExhFan	11-Community Room 200	6	1950	NA	0.335665	☐	☐
14-Restrooms PropExhFan	14-Restrooms	1	650	NA	0.335665	☐	☐

Project Name:	Studio City Recreation Center	NRCC-PRF-01-E	Page 24 of 25
Project Address:	12621 Rye St Studio City 91604	Calculation Date/Time:	09:55, Thu, Jun 13, 2019
Compliance Scope:	NewComplete	Input File Name:	Studio City Recreation Center (Gym)_NR T24 Compliance Report_06-13-2019 (With NV Fan).cibd16x

C. TAILORED METHOD CONDITIONED LIGHTING POWER ALLOWANCE SUMMARY AND CHECKLIST (Adapted from NRCC-LTI-04-E) **§ 140.6**

General lighting power from special function areas (see Table E)	NA
Additional "use it or lose it" (See Table G)	0
Total watts	0

D. GENERAL LIGHTING POWER (Adapted from NRCC-LTI-04-E) **§ 140.6-D**

This Section Does Not Apply

E. GENERAL LIGHTING FROM SPECIAL FUNCTION AREAS (Adapted from NRCC-LTI-04-E) **§ 140.6(c) 3H**

Room Number	Primary Function Area	Illuminance Value (LUX)	Room Cavity Ratio (Table G)	Allowed LPD	Floor Area (ft²)	Allowed Watts	Confirmed: Pass	Confirmed: Fail
NA	NA	NA	NA	NA	NA	NA	☐	☐

Note: Tailored Method for Special Function Areas is not currently implemented

F. ROOM CAVITY RATIO (Adapted from NRCC-LTI-04-E)

Rectangular Spaces

Room Number	Task/Activity Description	Room Length (ft)	Room Width (ft)	Room Cavity Height (ft)	RCR	Confirmed: Pass	Confirmed: Fail
NA	NA	NA	NA	NA	NA	☐	☐

Non-Rectangular Spaces

This Section Does Not Apply

Note: All applicable spaces are listed under the Non-Rectangular Spaces table

G. ADDITIONAL "USE IT OR LOSE IT" (Adapted from NRCC-LTI-04-E)

1. Wall Display	2. Combined Floor Display and Task Lighting	3. Combined Ornamental and Special Effects Lighting	4. Very Valuable Merchandise	Allowed Watts	Confirmed: Pass	Confirmed: Fail
0	0	0	0	**0**	☐	☐

5. Wall Display

This Section Does Not Apply

Project Name:	Studio City Recreation Center	NRCC-PRF-01-E	Page 21 of 25
Project Address:	12621 Rye St Studio City 91604	Calculation Date/Time:	09:55, Thu, Jun 13, 2019
Compliance Scope:	NewComplete	Input File Name:	Studio City Recreation Center (Gym)_NR T24 Compliance Report_06-13-2019 (With NV Fan).cibd16x

D. DHW EQUIPMENT SUMMARY – *(Adapted from NRCC-PLB-01)* **§ 110.3** **Confirmed**

1. DHW Name	2. Heater Element Type	3. Tank Type	4. Qty	5. Tank Vol (gal)	6. Rated Input (kBtu/h)	7. Efficiency	8. Tank Insulation R-value (Int/Ext)	9. Standby Loss Fraction	10. Heat Pump Type	11. Tank Location or Ambient Condition	Pass	Fail
Rheem HPLD802	Electricity	NA	1	80.00	1.2 (kW)	UEF: 3.70	NA	NA	Heat-Pump Packaged	Outdoor	☐	☐

E. MULTI-FAMILY CENTRAL DHW SYSTEM DETAILS

This Section Does Not Apply

F. SOLAR HOT WATER HEATING SUMMARY (Adapted from NRCC-STH-01)

This Section Does Not Apply

G. MECHANICAL HVAC ACCEPTANCE TESTS & FORMS *(Adapted from 2016-NRCC-MCH-01-E)* **§ RA4**

Declaration of Required Acceptance Certificates (NRCA) – Acceptance Certificates that may be submitted. (Retain copies and verify forms are completed and signed to post in field for Field Inspector to verify).

Test Description		MCH-02A	MCH-03A	MCH-04A	MCH-05A	MCH-06A	MCH-07A	MCH-08A	MCH-09A	MCH-10A	MCH-11A	MCH-12A	MCH-13A	MCH-14A	MCH-15A	MCH-16A	MCH-17A	MCH-18A	Confirmed	
Equipment Requiring Testing or Verification	# of units	Outdoor Air	Single Zone Unitiary	Air Dist. Ducts	Economizer Controls	DCV	Supply Fan VAV	Valve leakage	Supply Water Temp. Reset	Hyd. Variable Flow Control	Auto Demand Shed Control	FDD for DX Units	Auto FDD for Air & Zone	Dist. Energy Storage DX AC	TES Systems	Supply Air Temp. Reset	Condenser Water Reset Controls	ECMS	Pass	Fail
Studio City Recreation Ce1 - SHW	1	--	--	--	--	--	--	--	--	--	--	--	--	--	--	--	--	--	☐	☐
FC-3/1 (Lobby 100)	1	X	X	--	--	X	X	--	--	--	--	--	--	--	--	--	--	--	☐	☐

BUREAU OF ENGINEERING OFFICIAL RECORD

TTLB TEMPLATE REVISION DATE:
SHEET ISSUE DATE:
REVISION DATES (DESIGN STAGE)
FILE PATH:

THE CITY OF LOS ANGELES OR ITS OFFICERS OR AGENTS SHALL NOT BE RESPONSIBLE FOR THE ACCURACY OR COMPLETENESS OF ELECTRONIC COPIES OF THIS PLAN SHEET.

DEPARTMENT OF PUBLIC WORKS
BUREAU OF ENGINEERING
CITY OF LOS ANGELES

NO.	REVISION DESCRIPTION	DATE	BY

INDEX | BUILDING – | RP-300106

REGISTERED PROFESSIONAL ENGINEER JAMES H. SHWE No. 26903 Renewal: 9/30/20 MECHANICAL STATE OF CALIFORNIA

CITY	DATE	BY
	26.APR.19	
	26.APR.19	
	26.APR.19	
	26.APR.19	
	26.APR.19	

TED ALLEN, PE
ARCHITECTURAL
ARCHITECT/ENGINEER : JAMES H SHWE LIC. NO. - M 26903
DESIGNED BY: J.S
DRAWN BY: S.W.L
CHECKED BY: J.SIN.W
APPROVED BY: MAHMOOD KARIMZADEH, AIA, DEPUTY CITY ENGINEER

Project Status
PROJECT ISSUE DATE: Project Issue Date
CITY OF LOS ANGELES

VERTICAL CONTROL:
HORIZONTAL:
SHEET: TITLE–24
PROJECT: STUDIO CITY GYMNASIUM
ADDRESS: 12621 RYE STREET, STUDIO CITY, CA 91604

WORK ORDER E170267B
PLAN FILE
DRAWING M004
SHEET 145 OF SHEET 211

16007/STUDIO CITY-REC CENTER/07-29-2019

AIR HANDLING UNITS			
TAG			AHU-1 & 2
SPEC. REFERENCE			23-7000
SERVICE			GYM
LOCATION			BUILDING ROOF
TYPE			HORIZONTAL DRAW-THRU, SINGLE ZONE VAV
DESIGN BASE MANUFACTURER & MODEL			ALLIANCE AIRE CUSTOM AIR HANDLING UNIT
FAN	MANUFACTURER		ALLIANCE AIRE CUSTOM AIR HANDLING UNIT
	MODEL		AAPF (9 blades)
	SIZE		222
	CLASS		II
	OPERATING RPM		1816
	MAX RPM		2403
	PERCENT WIDTH		100
	ARRANGEMENT		4
	CFM		7,000
	TOTAL STATIC / EXTERNAL STATIC		4.2 / 1.52
	BRAKE HP		7.02
	DRIVE HP		7.40
	STATIC EFF.		65.9%
COOLING	FACE VELOCITY (FPM)		437.5
	NO. OF ROWS		4
	FIN PER INCH		19
	ENTERING AIR	DB (°F)	97
		WB (°F)	69
	LEAVING AIR	DB (°F)	58.03
		WB (°F)	56.63
	AIR PRESSURE DROP (IN. W.G)		0.58
	CAPACITY (MBH)	TOTAL	256.2
		SENSIBLE	203.8
HEATING	CAPACITY (MBH)		243
	ENTERING AIR (°F)		28
FILTER	MERV NO.		13
	MAX. FACE VELOCITY (FPM)		437.5 FPM
	QUANTITY		4
	SIZE HxWxT (IN)		24 x 24
ELECTRICAL INFORMATION	SUPPLY FAN	HP	10.0
		QTY	1.0
		FLA	30.8
		TOTAL FLA	30.8
	MISCELLANEOUS FLA		10.0
	MCA		48.5
	MOCP		63.9
	VOLTAGE		208/3
	HZ		60
OUTDOOR AIR	CFM		2800
	% OF TOTAL		20
VIBRATION ISOLATION	TYPE		VIBREX RMS-EQ-10
	DEFLECTION (IN)		2"
DYNAMIC INSERTION LOSS/SELF NOISE POWER LEVEL (DECIBEL RE 10-12 WATTS)	INLET		OUTLET
	63		85
	125		85
	250		92
	500		86
	1000		84
	2000		85
	4000		81
	8000		74
OPERATING WEIGHT (LBS)			3,200
ON EMERGENCY POWER			NO
REFERENCE ANCHORAGE DETAIL			#- 1,2/ M-405
REFERENCE CONTROL DETAIL			#- 1,2,3/ M-502
REMARKS			• THE AH UNIT IS CUSTOM BUILT TO ORDER UNIT. THE SUCCESSFUL BIDDER SHALL FIELD MEASURE AND VERIFY ALL DIMENSIONS, REQUIRED SERVICE & INSTALLATION CLEARANCES BEFORE FABRICATION. • PROVIDE SEPARATE DEDICATED CIRCUITS FOR CONTROLS AND LIGHTS UNDER DIVISION 26 • UNIT SHALL SHUT DOWN BY TOTAL COVERAGE SMOKE DETECTION SYSTEM THROUGH FACP

VRF SPLIT SYSTEM UNIT HEAT PUMP UNIT			
TAG			HP-18 / 1 & 2
MANUFACTURER			MITSUBISHI
MODEL NO.			PUHY-P216TSLMU-A (PUHY-P96TLMU + PUHY-P120TLMU)
NOMINAL TONS			18
LOCATION			BUILDING ROOF
COOLING	CAPACITY (MBH)	TOTAL	216
		SENSIBLE	162
	AMBIENT TEMP (°F)		95
	EDB (°F)		80
	EWB (°F)		67
	EER		12.1
	IEER		21
HEATING	CAPACITY (MBH)		243
	AMBIENT TEMP (°F)		40
	COP		3.56
	HSPF		N/A
REFRIGERANT	TYPE		R410A
	WEIGHT (Lb.)		48.8
ELECTRICAL	MCA (PER FRAME)		29 + 39
	MOCP (PER FRAME)		45 + 60
	V / ϕ / Hz		230 / 3 / 60
OPERATING WEIGHT (PER FRAME) (ISOLATORS NOT INCLUDED)			499 + 671
VIBRATION ISOLATORS	TYPE		VIBREX RMU-EQ-SH-1
	STATIC DEFLECTION		2"
REFERENCE ANCHORAGE DETAIL			#- 5/ M-402
REFERENCE CONTROL DETAIL			#- 1,2,3/ M-502
REMARKS			• PROVIDE INDIVIDUAL DISCONNECT SWITCH & POWER WIRING FOR EACH FRAME.

VRF SPLIT SYSTEM UNIT (OUTDOOR)			
TAG			HRU-18 / 1
MANUFACTURER & SERIES			MITSUBISHI
MODEL NO.			PURY-P216-TSLMU-A
NOMINAL TONS			18
LOCATION			BUILDING ROOF
COOLING	CAPACITY (MBH)	TOTAL	216
		SENSIBLE	162
	AMBIENT TEMP (°F)		95
	EDB (°F)		80
	EWB (°F)		67
	EER		12.4
	IEER		22.9
HEATING	CAPACITY (MBH)		243
	AMBIENT TEMP (°F)		40
	COP		3.52
	HSPF		-
REFRIGERANT	TYPE		R410A
	WEIGHT (Lb.)		-
ELECTRICAL	MCA (PER FRAME)		30 + 39
	MOCP (PER FRAME)		50 + 60
	V / ϕ / Hz		230 / 3 / 60
OPERATING WEIGHT (ISOLATORS NOT INCLUDED)			503 + 695
VIBRATION ISOLATORS	TYPE		VIBREX RMU-EQ-SH-1
	STATIC DEFLECTION		2"
REFERENCE ANCHORAGE DETAIL			#- 5/ M-402
REFERENCE CONTROL DETAIL			#- 1,2,3/ M-502
REMARKS			• PROVIDE INDIVIDUAL DISCONNECT SWITCH & POWER WIRING FOR EACH FRAME.

SPLIT SYSTEM OUTDOOR UNIT				
TAG			CU-1	CU-2	HP-2/1
SPEC. REF. & SECTION			2.04 / 238000	2.04 / 238000	2.04 / 238000
SERVICE			COMM. RM 107	ELEC. RM - 109	KITCHEN-201
LOCATION			BUILDING ROOF	BUILDING ROOF	BUILDING ROOF
MANUFACTURER & MODEL			MITSUBISHI PUY-A24NHA6	MITSUBISHI PUY-A24NHA6	MITSUBISHI PUZ-A24NHA6
COOLING	CAPACITY (BTUH)	SENSIBLE	18,000	18,000	18,000
		TOTAL	24,000	24,000	24,000
	AMBIENT TEMP. (°F)		95	95	95
	EDB TEMP. (°F)		80	80	80
	EWB TEMP. (°F)		67	67	67
	EER / SEER		10.6 / 17.0	10.6 / 17.0	9.6/14
REFRIGERANT	TYPE		R410A	R410A	R410A
	WEIGHT (LBS)		N/A	N/A	N/A
ELECTRICAL	V		230	230	230
	ø		1	1	1
	Hz		60	60	60
	MCA / MOCP		18 / 30	18 / 30	18/30
	FLA		0.75	0.75	0.76
INDOOR UNIT (FAN COIL UNIT)			FC-2/1	FC-2/2	FC-2/3
OPERATING WEIGHT (LBS)			163	163	165
VIBRATION ISOLATORS	TYPE		VIBREX RMUJ-EQ-SH	VIBREX RMUJ-EQ-SH	VIBREX RMUJ-EQ-SH
	DEFLECTION (IN)		1	1	1
REFERENCE ANCHORAGE DETAIL			#-6 / M-402	#-6 / M-402	#-6 / M-402
REFERENCE CONTROL DETAIL			#-1,2,3 / M-504	#-1,2,3 / M-504	#-1,2,3 / M-507
REMARKS			• COOLING ONLY UNIT	• COOLING ONLY UNIT	

INDOOR FAN COIL UNIT					
TAG			FC-1/1, FC-1/2	FC-1.5/1, FC-1.5/2, FC-1.5/3 FC-1.5/4, FC-1.5/5, FC-1.5/6	FC-3/1	FC-2/1, FC-2/2	FC-2/3
LOCATION			OFFICE 101,	COMMUNITY ROOM 200	LOBBY 100	COMM. RM 107 ELEC RM 109	KITCHEN 201
MANUFACTURER & UNIT TYPE			MITSUBISHI FOUR WAY CEILING CASSETTE	MITSUBISHI FOUR WAY CEILING CASSETTE	MITSUBISHI CEILING CONCEALED MEDIUM STATIC	MITSUBISHI WALL MOUNT UNIT	MITSUBISHI FOUR WAY CEILING CASSETTE
MODEL NO.			PLFY-P12NCMU-E	PLFY-P18NBMU-E	PEFY-P36NMAU-E	PKA-A24KA6	PLA-A24BA6
ESP (IN.)			N/A	N/A	0.4	N/A	N/A
CFM			350	530	1,000	705	490
COOLING	CAPACITY (BTUH)	TOTAL	12,000	18,000	36,000	24,000	24,000
		SENSIBLE	9,000	13,500	27,000	18,000	18,000
	REFRIGERANT		R410A	R410A	R410A	R410A	R410A
	EAT DB (°F)		80	80	80	80	80
	EAT WB (°F)		67	67	67	67	67
HEATING	TOTAL (BTUH)		13,500	20,000	40,000	N/A	24,000
	EAT DB (°F)		40	40	40	40	40
ELECTRICAL	WATTS		20	50	244	56	50
	FLA		0.28	0.36	1.5	0.36	0.51
	MCA		0.35	0.45	3.33	1	1
	MOCP		15	15	15	N/A	N/A
	V / ϕ / Hz		208 / 1 / 60	208 / 1 / 60	208 / 1 / 60	208 / 1 / 60	208 / 1 / 60
OPERATING WEIGHT (LBS)			37	51	93	46	51
OUTDOOR AIR	CFM		100	472	300	N/A	100
	% OF TOTAL		14.3	15	30	N/A	20.4
REFERENCE ANCHORAGE DETAIL			#- 1,2,4/ M-402	#- 1,2,4/ M-402	#- 1,2,4/ M-402	#- 7/ M-403	#- 1,2,4/ M-402
REFERENCE CONTROL DETAIL			#-1,2,3 / M-503	#-1,2,3 / M-503	#-1,2,3 / M-503	#-1,2,3 / M-504	#-1,2,3 / M-507
REMARKS			• PROVIDE WITH BUILT IN CONDENSATE LIFT PUMP AND HIGH LEVEL SWITCH. • PROVIDE MANUFACTURE'S DECORATION COVER TO COVER THE UNIT CASING. • PROVIDE MERV 8 PLASMA FILTER.	• PROVIDE WITH BUILT IN CONDENSATE LIFT PUMP AND HIGH LEVEL SWITCH. • PROVIDE MANUFACTURE'S DECORATION COVER TO COVER THE UNIT CASING. • PROVIDE MERV 8 PLASMA FILTER. • ALL UNITS SHALL SHUT DOWN BY TOTAL COVERAGE SMOKE DETECTION SYSTEM THROUGH FACP.	• PROVIDE WITH BUILT IN CONDENSATE LIFT PUMP AND HIGH LEVEL SWITCH. • PROVIDE MANUFACTURE'S DECORATION COVER TO COVER THE UNIT CASING. • PROVIDE 2" MERV 8 PLEATED FILTER.	• PROVIDE WITH MANUFACTURER CONDENSATE LIFT PUMP AND HIGH LEVEL SWITCH. • COOLING ONLY UNIT.	• PROVIDE WITH BUILT IN CONDENSATE LIFT PUMP AND HIGH LEVEL SWITCH. • PROVIDE MANUFACTURE'S DECORATION COVER TO COVER THE UNIT CASING. • PROVIDE MERV 8 PLASMA FILTER.

BRANCH CIRCUIT CONTROLLER			
UNIT TAG ON PLAN			BC-1	BC-2
BC TYPE			MAIN	SUB
MODEL			CMB-P108NU-GA	CMB-P108NU-GB
PORTS			8	8
ELECTRICAL	V / ϕ / Hz		208/ 1 / 60	208/ 1 / 60
	MCA		0.68	0.64
	MOCP		15	15
WEIGHT (Lbs)			122	82

DUCT SILENCERS			
SYMBOL		DS-1,DS-2	DS-3,DS-4
SERVICE		GYMNASIUM	GYMNASIUM
LOCATION		AHU-1 SUPPLY & RETURN	AHU-2 SUPPLY & RETURN
MANUFACTURER & MODEL		IAC LFM	IAC LFM
DIMENSIONS WXHXL		24x48x60	24x48x60
CFM		7000	7000
PD (IN. WG)		0.16	0.16
DYNAMIC INSERTION LOSS/ SELF NOISE POWER LEVEL (DECIBEL RE 10-12 WATTS)	63	8 / 47	8 / 47
	125	13 / 34	13 / 34
	250	23 / 36	23 / 36
	500	29 / 35	29 / 35
	1000	28 / 40	28 / 40
	2000	17 / 37	17 / 37
	4000	14 / 27	14 / 27
	8000	13 / 20	13 / 20
OPERATING WEIGHT (LBS)		157	157
REMARKS		PROVIDE EXTERNAL INSULATION WITH WEATHER PROOF JACKET.	PROVIDE EXTERNAL INSULATION WITH WEATHER PROOF JACKET.

THE CITY OF LOS ANGELES OR ITS OFFICERS OR AGENTS SHALL NOT BE RESPONSIBLE FOR THE ACCURACY OR COMPLETENESS OF ELECTRONIC COPIES OF THIS PLAN SHEET.

TTLB_TEMPLATE REVISION DATE:
SHEET ISSUE DATE:
REVISION DATES (DESIGN STAGE)
FILE PATH:

BUREAU OF ENGINEERING
REVISION DESCRIPTION: NO. | DATE | BY
BUILDING: -
INDEX: RP-300106

REGISTERED PROFESSIONAL ENGINEER — JAMES H. SHWE — No. 26903 — Renewal: 9/30/20 — MECHANICAL — STATE OF CALIFORNIA

DEPARTMENT OF PUBLIC WORKS
CITY OF LOS ANGELES

CITY	DATE	BY
	26.APR.19	
	26.APR.19	
	26.APR.19	
	26.APR.19	
	26.APR.19	

TED ALLEN, PE — ARCHITECTURAL — ENGINEER
ARCHITECT/ENGINEER: JAMES H SHWE — LIC. NO.: M 26903
DESIGNED BY: JS
DRAWN BY: S.W.L
CHECKED BY: J.S/N.W
APPROVED BY: MAHMOOD KARIMZADEH, AIA, DEPUTY CITY ENGINEER

Project Status
PROJECT ISSUE DATE: Project Issue Date

VERTICAL CONTROL:
HORIZONTAL:
SHEET: SCHEDULES
PROJECT: STUDIO CITY GYMNASIUM
ADDRESS: 12621 RYE STREET, STUDIO CITY, CA 91604

BUREAU OF ENGINEERING — OFFICIAL RECORD

WORK ORDER: E170267B
PLAN FILE
DRAWING: M005
SHEET 146 OF SHEET 211

E170267/STUDIO CITY-REC CENTER/07-29-2019

HYBRID VENTILATOR				
TAG		EF-1,2,3,4	EF-5,6,7	EF-8
SPEC. REF. & SECTION		23-8000	23-8000	23-8000
SERVICE		NATURAL VENTILATION RELIEF	NATURAL VENTILATION RELIEF	RESTROOM EXHAUST
LOCATION		BUILDING ROOF	BUILDING ROOF	BUILDING ROOF
TYPE		TORNADO	TORNADO	TORNADO
DESIGNE BASE MANUFACTURER & MODEL		INVISCO INDUSTRIAL EP900	INVISCO INDUSTRIAL EP400	INVISCO INDUSTRIAL EP400
CFM		5309 / 8005	3000/ 2700/ 2200	3000/ 2700/ 2200
SP (IN. WG)		0.0 / 0.2	0.0/ 0.1/ 0.2	0.0/ 0.1/ 0.2
CURB SIZE (IN)		N/A	N/A	N/A
NECK DIA (IN)		35.39	16.14	16.14
ELECTRICAL	VOLT	230	230	230
	ø	1	1	1
	Hz	60	60	60
	WATTS	50-505 (VARIABLE SPEED)	187	187
	FLA	2	-	-
WEIGHT (LBS)		55	-	-
REFERENCE SECTION DETAIL		#- 3/ M-403	#- 3/ M-403	#- 3/ M-403
REFERENCE CONTROLS DETAIL		#- 1/ M-505	#- 1/ M-505	#- 1/ M-505
REMARKS		•WIND POWER ASSISTED FOR ENERGY USE REDUCTION •PROVIDE MANUFACTURER'S CURB AND BACKDRAFT DAMPER.	•WIND POWER ASSISTED FOR ENERGY USE REDUCTION •PROVIDE MANUFACTURER'S CURB AND BACKDRAFT DAMPER. •0-10 VDC SPEED CONTROL INPUT.	•WIND POWER ASSISTED FOR ENERGY USE REDUCTION •PROVIDE MANUFACTURER'S CURB AND BACKDRAFT DAMPER. •0-10 VDC SPEED CONTROL INPUT.

VENTILATORS		
TAG	V-1	V-2 TO V-8
SPEC. REFERENCE	23-8000	23-8000
SERVICE	OFFICE, LOBBY OA INTAKE	COMMUNITY ROOM , KITCHEN OA INTAKE
LOCATION	SEE ROOF PLAN	SEE ROOF PLAN
DESIGN BASE MANUFACTURES & MODEL	GREENHECK GRSI-12	GREENHECK GRSI-8
CFM	350	50
SP(IN. WG.)	0.03	0.003
CURB SIZE (IN)	H 12 x W 22 x L 22	H 12 x W 19 x L 19
NECK DIA. (IN)	12.25	8.25
WEIGHT (LBS)	27	7
REFERENCE SECTION DETAIL	#- 2/ M-403	#- 2/ M-403
REMARKS	PROVIDE MANUFACTURER'S CURB AND BACKDRAFT DAMPER.	PROVIDE MANUFACTURER'S CURB AND BACKDRAFT DAMPER.

KITCHEN HOOD		
TAG		KH-1 & KH-2
LOCATION		KITCHEN 201
MANUFACTURE & MODEL		DENLAR KITCHEN HOOD W/ FIRE SUPPRESSION SYSTEM D1036-F_(NFPA101)
WIDTH		36 "
FAN TYPE		INTERNAL
VENTING		REAR EXPELLING
C.F.M.		500
DUCT LENGTH(max)		N/A
ELECTRICAL	VOLTAGE	115
	PHASE	1
	HERTZ	60
	AMPS	5
REFERENCE ANCHORAGE DETAIL		#1,2,3,4/ M404
REFERENCE CONTROL DETAIL		#3/ M505
REMARKS		

REGISTERS / GRILLES				
TAG**	NECK SIZE (INCHES)	NC	MANUFACTURER MODEL MODULE TYPE	REMARKS
S-A-CFM	12	21	AIRCONCEPTS ANC -12 AIR NOZZLE PANELS, 3 ELEMENTS	• SEE INSTALLATION DETAIL #3/M405.
S-B-CFM	38X10	< 25	PRICE 500 / 600 / 700 SERIES 45º DEFLECTION	•
R-A-CFM	38x10	< 25	PRICE 510Z / 610Z / 7Z0Z SERIES 0º DEFLECTION	•
R-B-CFM	16 x 10	< 15	PRICE ATG SERIES	•
R-C-CFM	48 x 20	< 23	PRICE 510Z SERIES 0º DEFLECTION	•
R-D-CFM	6 x 6	< 25	PRICE 510Z SERIES 0º DEFLECTION	•
E-A-CFM	6 x 6	< 19	PRICE 500 / 600 / 700 SERIES 45º DEFLECTION	•
E-B-CFM	24x24	< 19	PRICE 510Z SERIES 0º DEFLECTION	•
E-C-CFM	42x20	< 35	PRICE 510Z SERIES 0º DEFLECTION	•
E-D-CFM	8 x 8	< 19	PRICE 500 / 600 / 700 SERIES 45º DEFLECTION	•
**NOTE:				
1. SEE FLOOR PLAN FOR ACTUAL CFM.				

DIFFUSERS				
TAG**	NECK SIZE (INCHES)	NC	MANUFACTURER MODEL MODULE TYPE	REMARKS
S-A-CFM-WAY	6 x 6	< 25	PRICE PDMC SERIES	
**NOTE:				
1. SEE FLOOR PLAN FOR ACTUAL CFM AND THROW DIRECTION.				

EXHAUST FANS & SUPPLY FANS					
TAG		EF-9	EF-10	EF-11,EF-12,EF-13	SF-1
SERVICE		RESTROOM 102	FUTURE BATTERY STORAGE 108	JAN RM 207/PANTRY 202/ STORAGE 03	FUTURE BATTERY STORAGE 108
LOCATION		BUILDING ROOF	BUILDING EXTERIOR WALL	BUILDING ROOF	BUILDING EXTERIOR WALL
TYPE		UPBLAST CENTRIFUGAL ROOF EXHAUST	SIDEWALL DIRECT DRIVE EXHAUST FAN	UPBLAST CENTRIFUGAL ROOF EXHAUST	SIDEWALL DIRECT DRIVE SUPPLY FAN
MANUFACTURE & MODEL		GREENHECK CUE-060-VG	GREENHECK SDPE-D-08G-1-DS	GREENHECK CUE-070-VG	GREENHECK SSF-8-426-D
C.F.M.		100	150	150	150
STATIC PRESSURE (IN. WC)		0.3	0.1	0.5	0.1
BHP		N/A	N/A	N/A	N/A
ARRANGEMENT		N/A	N/A	N/A	N/A
CLASS		N/A	N/A	N/A	N/A
DRIVE		DIRECT	DIRECT	DIRECT	DIRECT
MOTOR	HP	1/10	1/30	1/15	1/40
	V	115	115	115	115
	PHASE	1	1	1	1
	Hz	60	60	60	60
	RPM	1725	1725	1725	1550
REFERENCE ANCHORAGE DETAIL		#6/M 401	-	#6/M 401	-
REFERENCE CONTROL DETAIL		#2/M 505	-	#2/M 505	-
OPERATING WEIGHT (LBS)		25	22	38	59
REMARKS		PROVIDE PITCHED CURB AND BACKDRAFT DAMPER. PROVIDE EXHAUST DISCHARGE EXENSION & TERMINATE AT PARAPET LEVEL.	PROVIDE THERMOSTAT SET @90'F TO TURN ON EXHAUST FAN. PROVIDE 1/2" KBTZ ANCHOR BOLT ONE AT EACH CORNER.	PROVIDE PITCHED CURB AND BACKDRAFT DAMPER. PROVIDE EXHAUST DISCHARGE EXENSION & TERMINATE AT PARAPET LEVEL.	PROVIDE THERMOSTAT SET @90'F TO TURN ON SUPPLY FAN. PROVIDE 1/2" KBTZ ANCHOR BOLT ONE AT EACH CORNER.

OPERABLE WALL OPENING(NVT)					
TAG		NVT-1	NVT-2	NVT-3	NVT-4
SERVICE		GYNMASIUM 104, COMMUNITY ROOM 200, KITCHEN 201	GYNMASIUM 104,	GYNMASIUM 104,	COMMUNITY ROOM 200
LOCATION		BUILDING EXTERIOR WALL	BUILDING EXTERIOR WALL	BUILDING EXTERIOR WALL	BUILDING EXTERIOR WALL
TYPE		OPERABLE WALL OPEINING	OPERABLE WALL OPEINING	OPERABLE WALL OPEINING	OPERABLE WALL OPEINING
MANUFACTURE & MODEL		PRICE NVT	PRICE NVT	PRICE NVT	PRICE NVT
AIR VOLUME(FPM) @0.05 IN. W.G.		179	179	179	179
SIZE (IN)		36x36x8	42x36x8	44x36x8	60x36x8
QUANTITY		30	2	4	6
ELECTRICAL	V	24	24	24	24
	PHASE	1	1	1	1
	Hz	60	60	60	60
REFERENCE ANCHORAGE DETAIL		#4/M 402	#4/M 402	#4/M 402	#4/M 402
REFERENCE CONTROL DETAIL		#1/M 505	#1/M 505	#1/M 505	#1/M 505
REMARKS		PROVIDE EXTENDED DUCT SLEEVE TO FLASH MOUNT W/ INTERIOR WALL AND INTERIOR WALL GRILLE PROVIDE WASHABLE MERV 8 PLASMA FILTER.	PROVIDE EXTENDED DUCT SLEEVE TO FLASH MOUNT W/ INTERIOR WALL AND INTERIOR WALL GRILLE PROVIDE WASHABLE MERV 8 PLASMA FILTER.	PROVIDE EXTENDED DUCT SLEEVE TO FLASH MOUNT W/ INTERIOR WALL AND INTERIOR WALL GRILLE PROVIDE WASHABLE MERV 8 PLASMA FILTER.	PROVIDE EXTENDED DUCT SLEEVE TO FLASH MOUNT W/ INTERIOR WALL AND INTERIOR WALL GRILLE PROVIDE WASHABLE MERV 8 PLASMA FILTER.

BUREAU OF ENGINEERING

ENGINEERING
CITY OF LOS ANGELES

NO.	REVISION DESCRIPTION	DATE	BY
INDEX			

BUILDING -

RP-300106

REGISTERED PROFESSIONAL ENGINEER
TED H. ALLEN
No. 26903
Renewal: 9/30/20
MECHANICAL
STATE OF CALIFORNIA

DEPARTMENT OF PUBLIC WORKS
CITY OF LOS ANGELES

TED ALLEN, PE
ARCHITECTURAL

	DATE
CITY	
VERTICAL CONTROL:	
HORIZONTAL:	
SHEET	SCHEDULES
PROJECT	STUDIO CITY GYMNASIUM
ADDRESS	12621 RYE STREET, STUDIO CITY, CA 91604

ARCHITECT/ENGINEER : JAMES H SHWE	LIC. NO.: M 26903
DESIGNED BY:	J.S
DRAWN BY:	S.W.L
CHECKED BY:	J.SIN.W
APPROVED BY:	MAHMOOD KARIMZADEH, AIA, DEPUTY CITY ENGINEER

	DATE
ARCHITECTURAL	26.APR.19
ARCHITECT/ENGINEER	26.APR.19
DESIGNED BY	26.APR.19
DRAWN BY	26.APR.19
CHECKED BY	26.APR.19
APPROVED BY	26.APR.19

Project Status
PROJECT ISSUE DATE: Project Issue Date

BUREAU OF ENGINEERING
OFFICIAL RECORD

WORK ORDER
E170267B

PLAN FILE

DRAWING
M006

SHEET 147 OF SHEET 211

16007/STUDIO CITY REC CENTER/07-29-2019

THE CITY OF LOS ANGELES OR ITS OFFICERS OR AGENTS SHALL NOT BE RESPONSIBLE FOR THE ACCURACY OR COMPLETENESS OF ELECTRONIC COPIES OF THIS PLAN SHEET.

TTLB_TEMPLATE REVISION DATE:
SHEET ISSUE DATE:
FILE PATH:

REVISION DATES
DESIGN STAGE

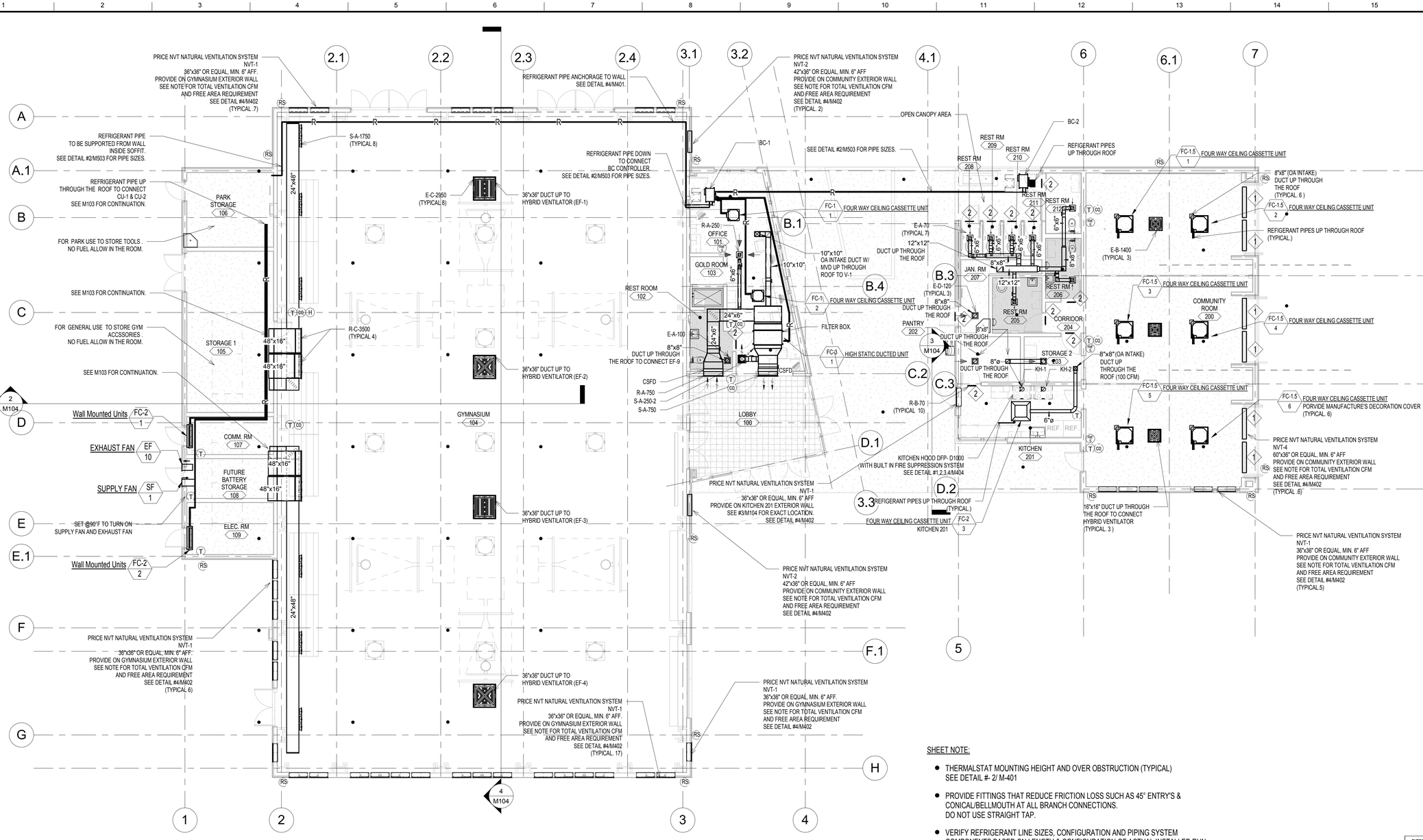

2016 California Mechanical Code Table 402.1 Minimum Ventilation Rates in Breathing Zone

Occupancy Category	Area (SF)	O.A per Occ. (CFM / OCC)	O.A per SF (CFM / SF)	OCC / 1000 SF	# of Occ.	O.A Req. Area (CFM)	O.A Req. Occ. (CFM)	Occ. Density (SF / OCC)	Ventilation per Occ. (CFM / OCC)	O.A Req. Total (CFM)
GYMNASIUM 104	7609	20	0.18	7	53.263	1369.6	1065.3	142.9	45.71	2434.9
Office 101	421	5	0.06	5	2.105	25.3	10.5	200	17	35.8
Lobby 100	332	5	0.06	150	49.8	19.9	249.0	6.7	5.4	268.9
Community Room 200	1438	7.5	0.06	100	143.8	86.3	1078.5	10	8.1	1164.8
Kitchen 201 (Non-cooking)	166.6	7.5	0.12	20	3.3316	20.0	25.0	50	13.5	45.0

2016 California Mechanical Code Table 403.7 Minimum Exhasut Rate

Occupancy Category	Area (SF)	Exhaust Rate (CFM/SF)	Total exhaust per code (CFM)	Total exhaust provided (CFM)	Total Make-up air provided (CFM)
Kitchen	197	0.3	59.1	1000	1000

1 HVAC FLOOR PLAN
SCALE: 1/8"=1'

REFRIGERANT CHARGE CALCULATION

ROOM NAME	TOTAL VOLUME (CU.FT.)	ALLOWABLE REFRIGERANT CHARGE PER 1000 CU.FT OF SPACE (LB)	TOTAL ALLOWABLE REFRIGERANT CHARGE (LB.) OF SPACE	TOTAL INSTALLED REFRIGERANT CHARGE (LB.)
GYMNASIUM 104	57152	26	1485.952	108
OFFICE 101	4399	26	114.374	108
COMMUNITY ROOM 200	19676	26	511.576	108
KITCHEN 201	1665.8	26	43.3108	6
PARK STORAGE 106	1740	26	45.24	12
STORAGE 1 105	3740	26	97.24	12
COMM RM 107	880	26	22.88	12
FUTURE BATTERY STORAGE 108	920	26	23.92	6
ELEC RM 109	1220	26	31.72	6

* BASED ON 2016 CMC TABLE 1102.2

SHEET NOTE:

- THERMALSTAT MOUNTING HEIGHT AND OVER OBSTRUCTION (TYPICAL) SEE DETAIL #- 2/ M-401
- PROVIDE FITTINGS THAT REDUCE FRICTION LOSS SUCH AS 45° ENTRY'S & CONICAL/BELLMOUTH AT ALL BRANCH CONNECTIONS. DO NOT USE STRAIGHT TAP.
- VERIFY REFRIGERANT LINE SIZES, CONFIGURATION AND PIPING SYSTEM COMPONENTS BASED ON LENGTH & CONFIGURATION OF ACTUAL INSTALLED RUN WITH MANUFACTURER. INSULATE SUCTION LINES.
- SEE SHEET M-006 FOR DIFFUSER, REGISTER AND GRILLE INFORMATION
- USE 29 GAUGE DUCTWORK FOR ALL ROOF VENTILATOR OPENINGS AND SOUND BOOTS

GYMNASIUM CONDITIONING WITH AMBIENT AIR:

- FREE AREA AVAILABLE 281 SF
- EQUIVALENT AREA (A_e) = C_0 x A
  = 0.200 x 281 SF
  = 56.2 SF
- VENTILATION AVAILABLE = EQUIVALENT AREA x FPM
  = 56.2 SF x 179 FPM @ 0.05 IN W.G
  = 10059.8 CFM

COMMUNITY ROOM CONDITIONING WITH AMBIENT AIR:

- FREE AREA AVAILABLE 144 SF
- EQUIVALENT AREA (A_e) = C_0 x A
  = 0.200 x 144 SF
  = 28.8 SF
- VENTILATION AVAILABLE = EQUIVALENT AREA x FPM
  = 28.8 SF x 179 FPM @ 0.05 IN W.G
  = 5155.2 CFM

KEY NOTE:

1. 60"x36" VENTILATION INTAKE LOUVER ABOVE NANAWALL
2. PROVIDE DOOR LOUVER W/ MIN. 0.2 SF FREE AREA FOR RESTROOM MAKE UP AIR
3. RELIEF AIR BOOT WITH 38" X 22" PRICE 510Z SERIRES O' DEFLECTION 3 NUMBERS. SEE DETAIL #3/ M403.
4. RELIEF AIR BOOT WITH 28" X 12" PRICE 510Z SERIRES O'DEFLECTION 2 NUMBERS. SEE DETAIL #3/ M403.
5. REFRIGERANT PIPES IN CONCEILED CONDUIT.

BUREAU OF ENGINEERING OFFICIAL RECORD

N

THE CITY OF LOS ANGELES OR ITS OFFICERS OR AGENTS SHALL NOT BE RESPONSIBLE FOR THE ACCURACY OR COMPLETENESS OF ELECTRONIC COPIES OF THIS PLAN

FILE PATH: C:\Revit Local File\16007.00 Studio City-Rec Center (Gym)\SCRC-Project Model_HVAC Local SWL-2019-07-29_R17.rvt

TTLB TEMPLATE REVISION DATE: 05/09/17
SHEET ISSUE

REVISION DATES (DESIGN STAGE)

DEPARTMENT OF PUBLIC WORKS
BUREAU OF ENGINEERING
CITY OF LOS ANGELES

ENGINEERING
CITY OF LOS ANGELES

NO.	REVISION DESCRIPTION	DATE	BY

BUILDING -
INDEX RP-300106

TED ALLEN, PE
ARCHITECTURAL
ARCHITECT/ENGINEER: JAMES H SHWE LIC. NO.: M 26903
DESIGNED BY: J.S
DRAWN BY: S.W.L
CHECKED BY: J.S / N.W
APPROVED MAHMOOD KARIMZADEH, AIA, DEPUTY CITY

CITY	
DATE	26.APR.19
	26.APR.19
	26.APR.19
	26.APR.19
	26.APR.19

Project Status
PROJECT ISSUE DATE: 26.APR.19

CITY OF LOS ANGELES
VERTICAL CONTROL:
HORIZONTAL
SHEET HVAC FLOOR PLAN
PROJECT STUDIO CITY GYMNASIUM
ADDRESS 12621 RYE STREET, STUDIO CITY, CA 91604

WORK ORDER E170267B
PLAN FILE
DRAWING M100
SHEET 148 OF SHEET 211

PLOTTED:7/29/2019 4:54:32 PM

THE CITY OF LOS ANGELES OR ITS OFFICERS OR AGENTS SHALL NOT BE RESPONSIBLE FOR THE ACCURACY OR COMPLETENESS OF ELECTRONIC COPIES OF THIS PLAN

FILE PATH: C:\Revit Local File\16007.00 Studio City-Rec Center (Gym)\SCRC-Project Model_HVAC Local SWL-2019-07-29_R17.rvt

TTLB TEMPLATE REVISION DATE: 05/09/17
SHEET ISSUE

SPLIT SYSTEM CONDENSING UNIT, ELEC. RM - 109 — CU 2 — SEE SHEET #5/M402 FOR STRUCTURAL ANCHORAGE DETAIL.

SPLIT SYSTEM CONDENSING UNIT, COMM. RM - 107 — CU 1 — SEE SHEET #5/M402 FOR STRUCTURAL ANCHORAGE DETAIL.

VRF OUTDOOR HEAT PUMP UNIT, COMMUNITY / SUPPORT AREA — HRU-18 1 — SEE SHEET #6/M402 FOR STRUCTURAL ANCHORAGE DETAIL.

VRF OUTDOOR HEAT PUMP UNIT, AHU-1 DX COIL — HP-18 1 — SEE SHEET #6/M402 FOR STRUCTURAL ANCHORAGE DETAIL.

AIR HANDLER UNIT, GYMNASIUM — AHU 1 — SEE SHEET #1/M405 FOR UNITCURB DETAIL

AHU-1 CONTROLS MODULE WITH BUILT-IN DISCONNECT AND SURGE PROTECTION IN NEMA-3 ENCLOSURE

AHU-1 COMMUNICATION MODULE WITH BUILT-IN DISCONNECT AND SURGE PROTECTION IN NEMA-3 ENCLOSURE

AHU-1 LIGHTING MODULE WITH BUILT-IN DISCONNECT AND SURGE PROTECTION IN NEMA-3 ENCLOSURE

2 / M104

VRF OUTDOOR HEAT PUMP UNIT, AHU-2 DX COIL — HP-18 2 — SEE SHEET #6/M402 FOR STRUCTURAL ANCHORAGE DETAIL.

AHU-2 CONTROLS MODULE WITH BUILT-IN DISCONNECT AND SURGE PROTECTION IN NEMA-3 ENCLOSURE

AHU-2 CONTROLS MODULE WITH BUILT-IN DISCONNECT AND SURGE PROTECTION IN NEMA-3 ENCLOSURE

AHU-2 CONTROLS MODULE WITH BUILT-IN DISCONNECT AND SURGE PROTECTION IN NEMA-3 ENCLOSURE

AIR HANDLER UNIT, GYMNASIUM — AHU 2 — SEE SHEET #1/M405 FOR UNIT CURB DETAIL

64" CLEARANCE AWAY FROM PV PANELS (TYPICAL. 4)

ROOF ACCESS

REFRIGERANT PIPE UP, SEE M100 FOR CONTINUATION. SEE DETAIL #2/M503 FOR PIPE SIZES. SEE DETAIL #4/M401 FOR PIPES INSTALLATION.

REFRIGERANT PIPES DOWN TO STORAGE1 TO CONNECT FC-2/1,FC-2/2 SEE DETAIL #6/M403.

FOR HRU, REFRIGERANT PIPES W/INSULATION TO BE SUPPORTED BY ROOFSUPPORTS. MAX.10' PIPE SPACING MIN 18" HIGH FROM ROOF

SLOPE

DS 1 DUCT SILENCER ON RISER

48"x16"

SEE M100 FOR CONTINUATION.

48"x24"

DS 2 DUCT SILENCER ON RISER

DS 3 DUCT SILENCER ON RISER

SEE M100 FOR CONTINUATION.

24"x48"

DS 4 DUCT SILENCER ON RISER

EF 1 HYBRID VENTILATOR GYMNASIUM

36"x36" DUCT DOWN TO GYMNASIUM (TYPICAL. 4)

EXHAUST FAN RESTROOM 102 — EF 9

MOTORIZED BACKDRAFT DAMPER SEE DETAIL #3/M 403. (TYPICAL 4)

EF 2 HYBRID VENTILATOR GYMNASIUM

EF 3 HYBRID VENTILATOR GYMNASIUM

EF 4 HYBRID VENTILATOR GYMNASIUM

ENVIRONMENTAL AIR, MINIMUM 3' AWAY FROM O.A INTAKE. (TYPICAL).

4 / M104

10" x 10" DUCT DOWN TO CONNECT FC-3/1 O.A INTAKE PLENUM.

V 1 VENTILATOR OFFICE, LOBBY OUTSIDE AIR INTAKE

OPEN BELOW

8" x 8" DUCT DOWN TO RESTROOM102

EXHAUST FAN — EF 11

EXHAUST FAN — EF 12

EXHAUST FAN — EF 13

REFRIGERANT PIPES DOWN TO KITCHEN 201 TO CONNECT FC-1.5/7. SEE DETAIL #5/M403. (TYPICAL 6)

GOOSENECK FOR KITCHEN EXHAUST (TYPICAL) SEE DETAIL FOR #5/M403

EF 8 HYBRID VENTILATOR RESTROOM

REFRIGERANT PIPES DOWN TO URINAL 213 TO CONNECT BC CONTROLLER-2. SEE DETAIL #6/M403.

8"x8" DUCT DOWN TO CONNECT CEILING CASSETTE UNITS. (TYPICAL .6)

36" CLEARANCE AWAY FROM PV PANELS (TYPICAL. 6)

12" x 12" DUCT DOWN TO JAN. RM 207

HP-2 1 HEAT PUMP UNIT KITCHEN 201

KITCHEN HOOD EXHAUST TO BE 10' AWAY FROM O.A INTAKE.

V 8 VENTILATOR OA INTAKE FOR KITCHEN'S FAN COIL UNIT

REFRIGERANT PIPES DOWN TO COMMUNITY ROOM 200 TO CONNECT FC-1.5/4. SEE DETAIL #6/M403. (TYPICAL 6)

V 2 VENTILATOR OA INTAKE FOR COMMUNITY ROOM

36" CLEARANCE AWAY FROM ANY O.A INTAKES. (TYPICAL.)

EF 5 HYBRID VENTILATOR COMMUNITY ROOM

V 3 VENTILATOR OA INTAKE FOR COMMUNITY ROOM

16"x16"DUCT DOWN TO COMMUNITY ROOM 200 (TYPICAL. 3)

42" CLEARANCE AWAY FROM PV PANELS (TYPICAL. 3)

V 4 VENTILATOR OA INTAKE FOR COMMUNITY ROOM

EF 6 HYBRID VENTILATOR COMMUNITY ROOM

V 5 VENTILATOR OA INTAKE FOR COMMUNITY ROOM

REFRIGERANT PIPE SUPPORT ON ROOF SEE DETAIL #5/M404.

V 6 VENTILATOR OA INTAKE FOR COMMUNITY ROOM

EF 7 HYBRID VENTILATOR COMMUNITY ROOM

V 7 VENTILATOR OA INTAKE FOR COMMUNITY ROOM

ENVIRONMENTAL AIR, MINIMUM 3' AWAY FROM O.A INTAKE. (TYPICAL)

MOTORIZED BAKCDRAFT DAMPER SEE DETAIL #3/M 403. (TYPICAL 3)

NOTE: ALL EXHASUT OUTLETS TERMINATE NO LESS THAN 3 FEET FROM PROPERTY LINE, 3 FEET FROM OPENINGS INTO THE BUILDING, 10 FEET FROM A FORCED AIRE INLET, AND DO NOT DISCHARGE ONTO APUBLIC WALKWAY.

1 HVAC ROOF PLAN
SCALE: 1/8"=1'

BUREAU OF ENGINEERING OFFICIAL RECORD

N

DEPARTMENT OF PUBLIC WORKS
BUREAU OF ENGINEERING
CITY OF LOS ANGELES

NO.	REVISION DESCRIPTION	DATE	BY

BUILDING -
INDEX RP-300106

CITY OF LOS ANGELES PROFESSIONAL ENGINEER — James H Shwe — No. 26903 — Renewal: 9/30/20 — CIVIL — STATE OF CALIFORNIA

	CITY	
DATE	26 APR. 19	26 APR. 19
LIC. NO. - M 26903		
DESIGNED BY: J.S		
DRAWN BY: S.W.L		
CHECKED BY: J.S / N.W		
APPROVED	DEPUTY CITY	

TED ALLEN, PE
ARCHITECTURAL
ARCHITECT/ENGINEER: JAMES H SHWE

VERTICAL CONTROL:
HORIZONTAL

SHEET HVAC ROOF PLAN
PROJECT STUDIO CITY GYMNASIUM
ADDRESS 12621 RYE STREET, STUDIO CITY, CA 91604

Project Status
PROJECT ISSUE DATE: 26.APR.19

WORK ORDER E170267B
PLAN FILE
DRAWING M103
SHEET 149 OF SHEET 211

PLOTTED:7/29/2019 4:54:35 PM

REVISION DATES / DESIGN STAGE

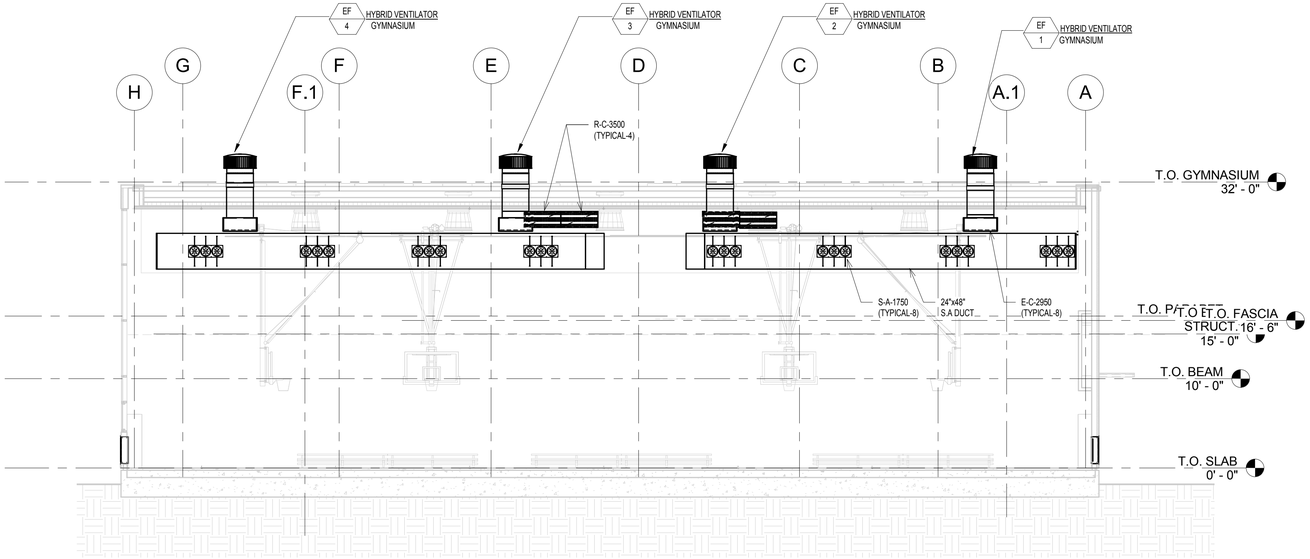

4 GYMNASIUM SECTION1
1/8" = 1'-0"

GYMNASIUM AIR BALANCE SCHEDULE

ROOM NAME	CFM PROVIDED			
	SUPPLY AIR	RETURN AIR	NATURAL VENTILATION (N.V.T)	RELIEF AIR
GYMNASIUM AHU-1	7000	7000	5029.9	5029.9
GYMNASIUM AHU-2	7000	7000	5029.9	5029.9

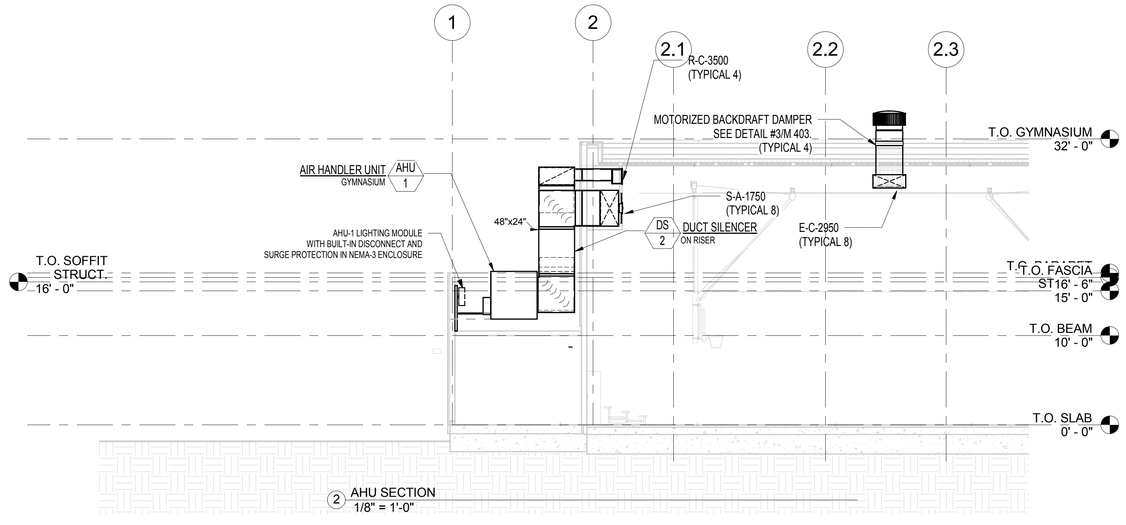

2 AHU SECTION
1/8" = 1'-0"

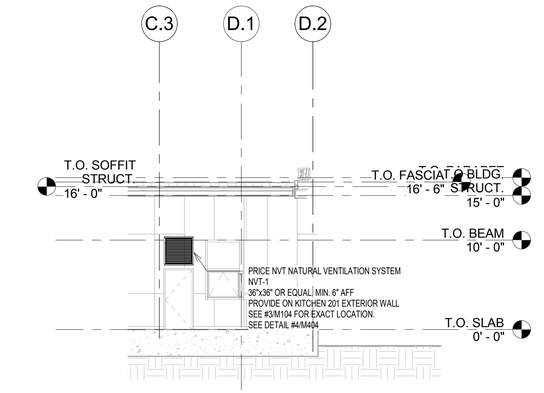

OPERABLE WALL OPENING (NVT) ON KITCHEN 201 WALL
3 1/8" = 1'-0"

BUREAU OF ENGINEERING
OFFICIAL RECORD

THE CITY OF LOS ANGELES OR ITS OFFICERS OR AGENTS SHALL NOT BE RESPONSIBLE FOR THE ACCURACY OR COMPLETENESS OF ELECTRONIC COPIES OF THIS PLAN

FILE PATH: C:\Revit Local File\16007.00 Studio City-Rec Center (Gym)\SCRC-Project Model_HVAC Local SWL-2019-07-29_R17.rvt

TTLB TEMPLATE REVISION DATE: 01/22/18
SHEET ISSUE

REVISION DATES (DESIGN STAGE)

BUREAU OF ENGINEERING
ENGINEERING
CITY OF LOS ANGELES

NO.	REVISION DESCRIPTION	DATE	BY
INDEX			

BUILDING -

RP-300106

Professional Engineer — James H. Shiwe — No. 26903 — Renewal: 9/30/20 — Registered in California

CITY	DATE
	26.APR.19
	26.APR.19
	26.APR.19
	26.APR.19
	26.APR.19

DEPARTMENT OF PUBLIC WORKS
CITY OF LOS ANGELES

TED ALLEN, PE

ARCHITECTURAL
ARCHITECT/ENGINEER: JAMES H SHIWE LIC. NO.: M 26903
DESIGNED BY: J.S
DRAWN BY: S.W.L
CHECKED BY: J.S / N.W
APPROVED MAHMOOD KARIMZADEH, AIA, DEPUTY CITY

Project Status
PROJECT ISSUE DATE: 26.APR.19

VERTICAL CONTROL:
HORIZONTAL

SHEET HVAC SECTION
PROJECT STUDIO CITY GYMNASIUM
ADDRESS 12621 RYE STREET, STUDIO CITY, CA 91604

WORK ORDER E170267B
PLAN FILE
DRAWING M104
SHEET 150 OF SHEET 211

PLOTTED:7/29/2019 4:55:39 PM

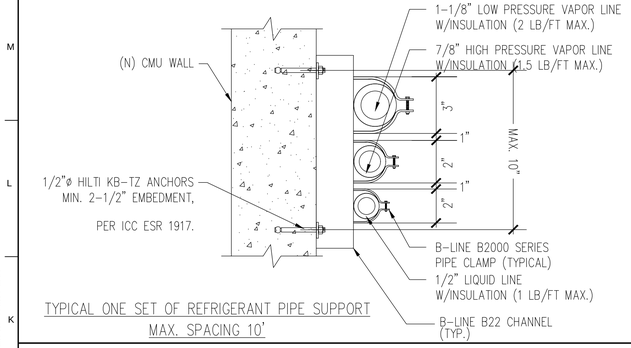

TYPICAL ONE SET OF REFRIGERANT PIPE SUPPORT MAX. SPACING 10'

REFRIGERANT PIPE ANCHORAGE TO WALL DETAIL

SCALE NONE — 4

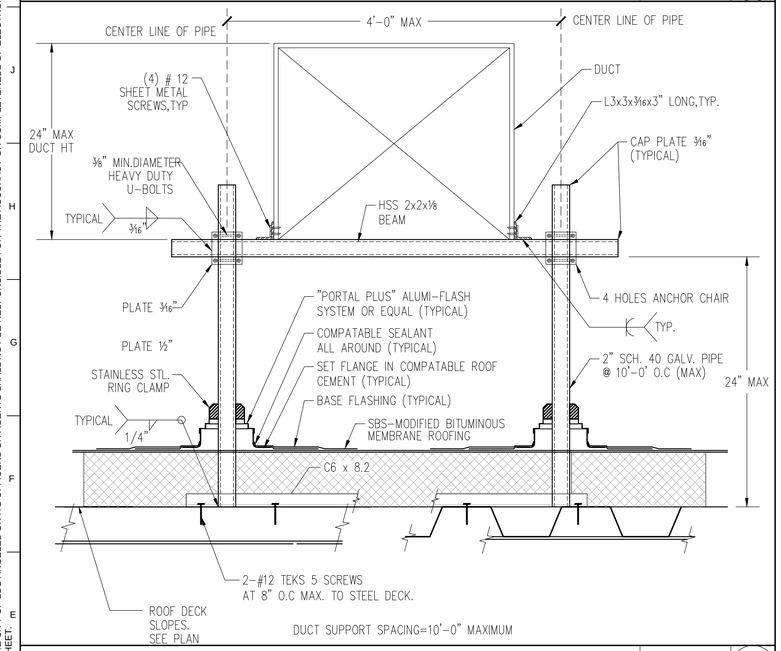

TYPICAL DUCT SUPPORT ON ROOF

SCALE NONE — 5

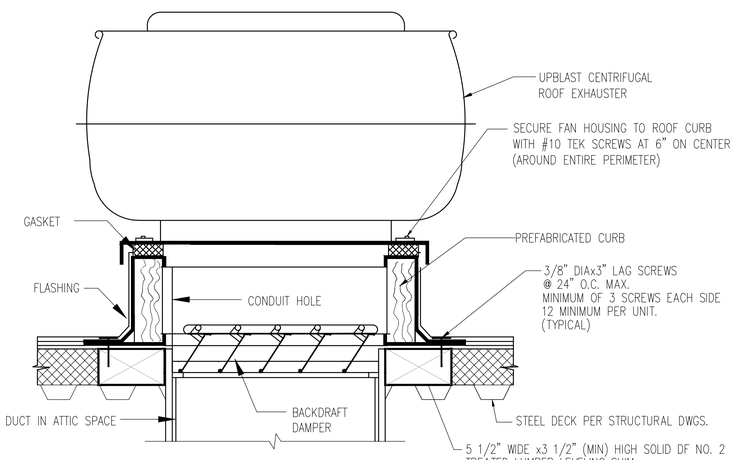

ROOF EXHAUST DETAIL (UPBLAST)

SCALE NONE — 6

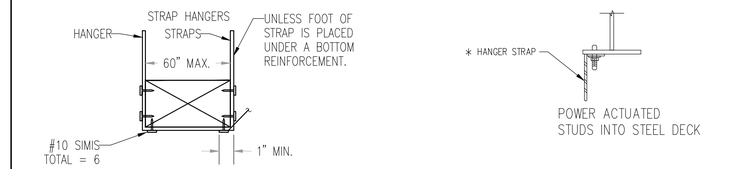

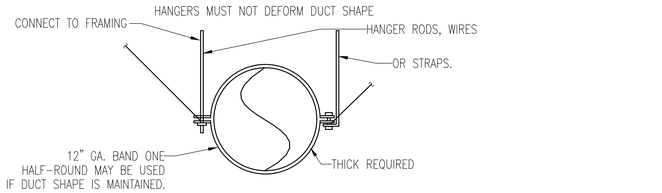

REINFORCEMENT MAY BE USED FOR ATTACHMENT IF IT QUALIFIES FOR BOTH DUTIES. DO NOT EXCEED ALLOWABLE LOAD LIMITS.

TABLE 4-2
MINIMUM HANGER SIZES FOR ROUND DUCT

Dia.	Maximum Spacing	Wire Dia.	Rod	Strap
10" dn 250 mm dn	12' 3.7 m	One 12 ga. One 2.75 mm	1/4" 6.4 mm	1" x 22 ga. 25.4 x 0.85 mm
11-18"	12'	Two 12 ga. or One 8 ga.	1/4"	1" x 22 ga.
460 mm	3.7 m	One 4.27 mm	6.4 mm	25.4 x 0.85 mm
19-24" 610 mm	12' 3.7 m	Two 10 ga. Two 3.51 mm	1/4" 6.4 mm	1" x 22 ga. 25.4 x 0.85 mm
25-36" 900 mm	12' 3.7 m	Two 8 ga. Two 2.7 mm	3/8" 9.5 mm	1" x 20 ga. 25.4 x 1.00 mm
37-50" 1270 mm	12' 3.7 m	→	Two 3/8" Two 9.5 mm	Two 1" x 20 ga (2) 25.4 x 1.00 mm
51-60" 1520 mm	12' 3.7 m	→	Two 3/8" Two 9.5 mm	Two 1" x 18 ga. (2) 25.4 x 1.31 mm
61-84" 2130 mm	12' 3.7 m	→	Two 3/8" Two 9.5 mm	Two 1" x 16 ga (2) 25.4 x 1.61 mm

NOTES:

1. Straps are galvanized steel; rods are uncoated or galvanized steel; wire is black annealed, bright basic, or galvanized steel. All are alternatives.
2. *See* Fig. 4-4 for lower supports.
3. *See* Figs. 4-2 and 4-3 for upper attachments.
4. Table allows for conventional wall thickness, and joint systems plus one lb/sf (4.89 Kg/m²) insulation weight. If heavier ducts are to be installed, adjust hanger sizes to be within their load limits; see allowable loads with Table 4-1. Hanger spacing may be adjusted by special analysis.
5. Designers: For industrial grade supports, including saddles, single load trapeze loads, longer spans and flange joint loads, see SMACNA's *Round Industrial Duct Construction Standards.*
6. *See* Figs. 3-9 and 3-10 for flexible duct supports.

TABLE 4-1
RECTANGULAR DUCT HANGERS
MINIMUM SIZE

MAXIMUM HALF OF DUCT PERIMETER	Pair at 10 ft. Spacing		Pair at 8 ft. Spacing		Pair at 5 ft. Spacing		Pair at 4 ft. Spacing	
	STRAP	WIRE / ROD	STRAP	WIRE / ROD	STRAP	WIRE / ROD	STRAP	WIRE / ROD
P/2 = 30"	1" × 22 ga.	10 ga. (.135")	1" × 22 ga.	10 ga. (.135")	1" × 22 ga.	12 ga. (.106")	1" × 22 ga.	12 ga. (.106")
P/2 = 72"	1" × 18 ga.	3/8"	1" × 20 ga.	1/4"	1" × 22 ga.	1/4"	1" × 22 ga.	1/4"
P/2 = 96"	1" × 16 ga.	3/8"	1" × 18 ga.	3/8"	1" × 20 ga.	3/8"	1" × 22 ga.	1/4"
P/2 = 120"	1½" × 16 ga.	1/2"	1" × 16 ga.	3/8"	1" × 18 ga.	3/8"	1" × 20 ga.	1/4"
P/2 = 168"	1½" × 16 ga.	1/2"	1½" × 16 ga.	1/2"	1" × 16 ga.	3/8"	1" × 18 ga.	3/8"
P/2 = 192"	—	1/2"	1½" × 16 ga.	1/2"	1" × 16 ga.	3/8"	1" × 16 ga.	3/8"
P/2 = 193" up	SPECIAL ANALYSIS REQUIRED							

WHEN STRAPS ARE LAP JOINED USE THESE MINIMUM FASTENERS:	SINGLE HANGER MAXIMUM ALLOWABLE LOAD	
	STRAP	WIRE OR ROD (Dia.)
1" × 18, 20, 22 ga.—two #10 or one 1/4" bolt 1" × 16 ga.—two 1/4" dia. 1" × 16 ga.—two 3/8" dia. Place fasteners in series, not side by side.	1" × 22 ga.— 260 lbs. 1" × 20 ga.— 320 lbs. 1" × 18 ga.— 420 lbs. 1" × 16 ga.— 700 lbs. 1½" × 16 ga.—1100 lbs.	0.106"—80 lbs. 0.135"—120 lbs. 0.162"—160 lbs. 1/4"—270 lbs. 3/8"—680 lbs. 1/2"—1250 lbs. 5/8"—2000 lbs. 3/4"—3000 lbs.

NOTES:
1. Dimensions other than guage are in inches.
2. Tables allow for duct weight, 1 lb./sf insulation weight and normal reinforcement and trapeze weight, but no external loads!
3. For custom design of hangers, designers may consult SMACNA's rectangular industrial duct standards, the AISI Cold Formed Steel Design Manual and the AISC Steel Construction Manual.
4. Straps are galvanized steel; other materials are uncoated steel.
5. Allowable loads for P/2 assume that ducts are 16 ga. maximum, except that when maximum duct dimension (w) is over 60" then P/2 maximum is 1.25 w.
6. For upper attachments, see "A"

TYPICAL DUCT SUPPORT DETAIL

SCALE NONE — 3

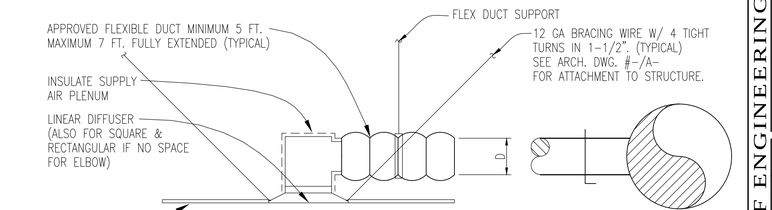

NOTE:

- D = DIAMETER
- 1 DUE TO STRINGENT ACOUSTICAL STANDARDS STRICT ADHERENCE TO THESE DETAILS IS REQUIRED.

BUREAU OF ENGINEERING — OFFICIAL RECORD

CEILING AIR INLET/OUTLET CONNECTION DETAIL

SCALE NONE — 1

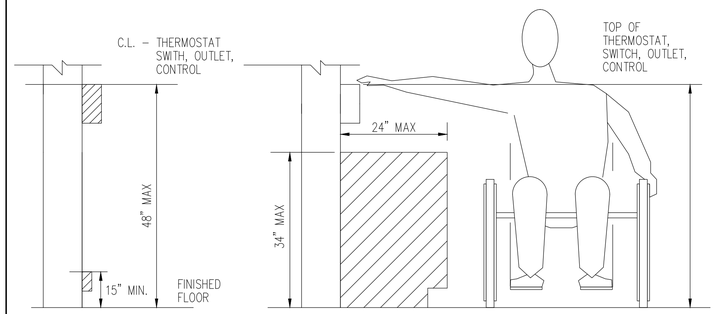

TYPICAL THERMOSTAT MOUNTING HEIGHT OVER OBSTRUCTION

SCALE NONE — 2

BUREAU OF ENGINEERING — CITY OF LOS ANGELES

DEPARTMENT OF PUBLIC WORKS

NO.	REVISION DESCRIPTION	DATE	BY
INDEX	BUILDING -		

RP-300106

REGISTERED PROFESSIONAL ENGINEER — JAMES H. SHIVE — No. 26903 — Renewal: 9/30/20 — MECHANICAL — STATE OF CALIFORNIA

CITY	DATE	
	26.APR.19	
	26.APR.19	
	26.APR.19	
	26.APR.19	
	26.APR.19	

ARCHITECTURAL
ARCHITECT/ENGINEER : JAMES H SHIVE — LIC. NO. M 26903
DESIGNED BY: JS — S.W.L
DRAWN BY: — J.S/N.W
CHECKED BY: — J.S/N.W
APPROVED BY: MAHMOOD KARIMZADEH, AIA, DEPUTY CITY ENGINEER

TED ALLEN, PE

CITY OF LOS ANGELES

Project Status
PROJECT ISSUE DATE: Project Issue Date

SHEET: THE CITY OF LOS ANGELES OR ITS OFFICERS OR AGENTS SHALL NOT BE RESPONSIBLE FOR THE ACCURACY OR COMPLETENESS OF ELECTRONIC COPIES OF THIS PLAN

TTLB TEMPLATE REVISION DATE:
SHEET ISSUE DATE:
REVISION DATES (DESIGN STAGE)
FILE PATH:

VERTICAL CONTROL:
HORIZONTAL:
SHEET: DETAILS
PROJECT: STUDIO CITY GYMNASIUM
ADDRESS: 12621 RYE STREET, STUDIO CITY, CA 91604

WORK ORDER E170267B
PLAN FILE
DRAWING M401
SHEET 151 OF SHEET 211

16007-STUDIO CITY-REC CENTER\07-29-2019

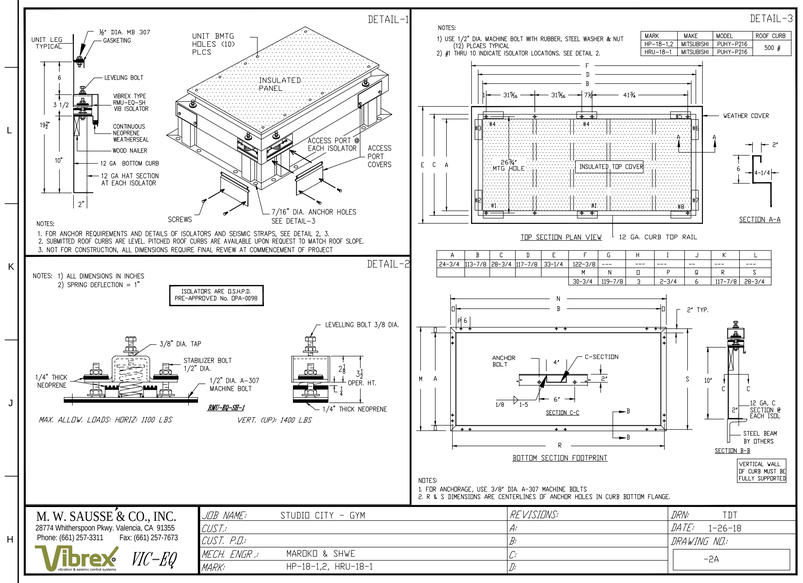

M. W. SAUSSÉ & CO., INC. 28774 Whitherspoon Pkwy, Valencia, CA 91355 Phone: (661) 257-3311 Fax: (661) 257-7673 Vibrex VIC-EQ	JOB NAME: STUDIO CITY - GYM	REVISIONS:	DRN: TDT
	CUST.:	A:	DATE: 1-26-18
	CUST. P.O.:	B:	DRAWING NO.: -2A
	MECH. ENGR.: MARDIKO & SIHWE	C:	
	MARK: HP-18-1,2, HRU-18-1	D:	

ROOF CURB DETAILS FOR HP-18-1 &2 , HRU-18-1 — SCALE NONE — 5

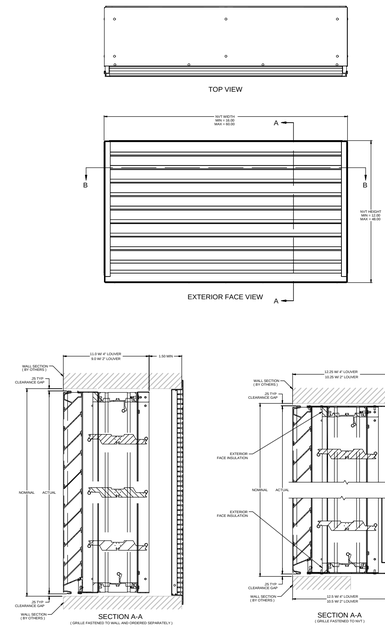

NVT-NATURAL VENTILATION TERMINAL STANDARD DETAILS — SCALE NONE — 3

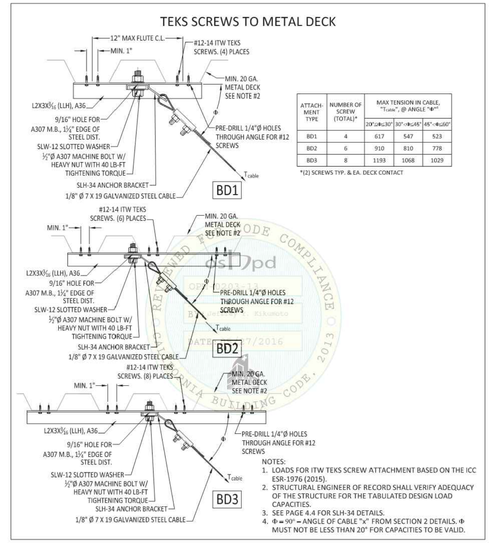

ATTACHMENT TYPE	NUMBER OF SCREW (TOTAL)*	MAX TENSION IN CABLE, "T-max", @ ANGLE "Φ="			
		20°≤Φ<30°	30°≤Φ<45°	45°≤Φ<60°	
BD1	4	617	547	523	
BD2	6	910	810	778	
BD3	8	1193	1068	1029	

*(2) SCREWS TYP. B.E.A. DECK CONTACT

Vibrex vibration & seismic control systems	M.W. Sausséé & Co., Inc. 28744 Witherspoon Parkway | Valencia, CA 91355 Ph: (661) 257-3311 | Fax: (661) 257-6050	Civil Engineer: P.K. Sachdeva California PE No. C59644	Page No.: 3.23 Date: May 9, 2016

05/27/2016 OPM-0203-13: Reviewed for Code Compliance by Jeffrey Kikumoto Page 163 of 211

TEKS SCREW TO METAL DECK DETAIL — SCALE NONE — 1

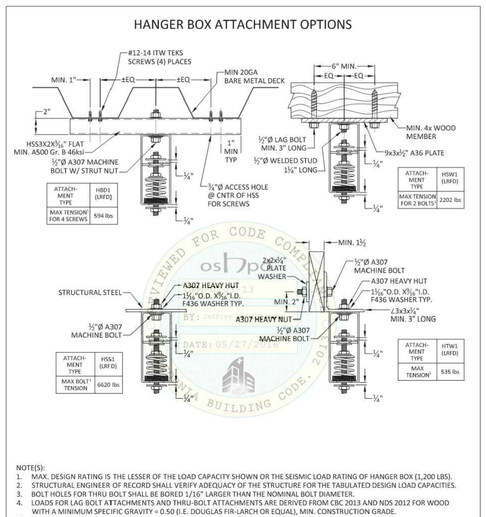

Vibrex vibration & seismic control systems	M.W. Sausséé & Co., Inc. 28744 Witherspoon Parkway | Valencia, CA 91355 Ph: (661) 257-3311 | Fax: (661) 257-6050	Civil Engineer: P.K. Sachdeva California PE No. C59644	Page No.: 3.32 Date: May 9, 2016

05/27/2016 OPM-0203-13: Reviewed for Code Compliance by Jeffrey Kikumoto Page 172 of 211

HANGER BOX ATTACHMENT DETAIL — SCALE NONE — 4

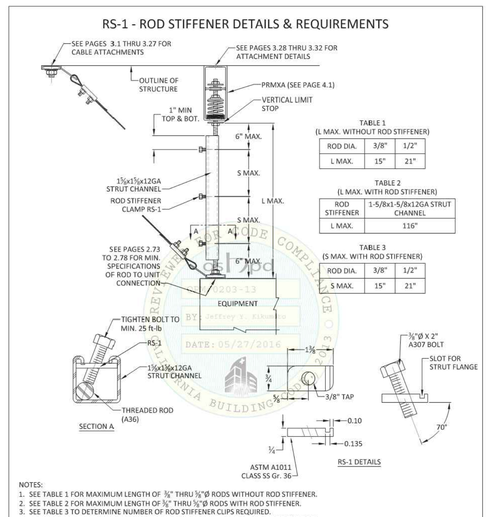

Vibrex vibration & seismic control systems	M.W. Sausséé & Co., Inc. 28744 Witherspoon Parkway | Valencia, CA 91355 Ph: (661) 257-3311 | Fax: (661) 257-6050	Civil Engineer: P.K. Sachdeva California PE No. C59644	Page No.: 4.2 Date: May 9, 2016

05/27/2016 OPM-0203-13: Reviewed for Code Compliance by Jeffrey Kikumoto Page 180 of 211

ROD STIFFENER DETIALS — SCALE NONE — 2

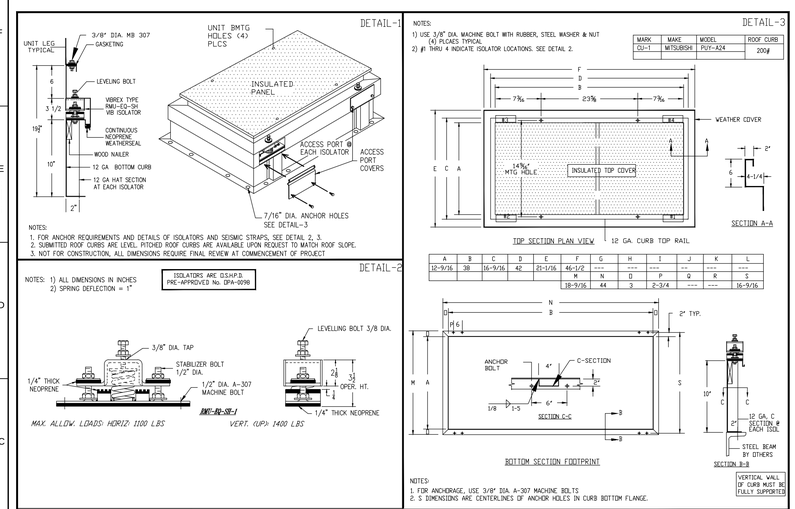

M. W. SAUSSÉ & CO., INC. 28774 Whitherspoon Pkwy, Valencia, CA 91355 Phone: (661) 257-3311 Fax: (661) 257-7673 Vibrex VIC-EQ	JOB NAME: STUDIO CITY - GYM	REVISIONS:	DRN: TDT
	CUST.:	A: RMUJ TO ROOF CURB (8-6-18)	DATE: 8-6-18
	CUST. P.O.:	B:	DRAWING NO.: -3A
	MECH. ENGR.: MARDIKO & SIHWE	C:	
	MARK: CU-1,2	D:	

ROOF CURB DETAILS FOR CU-1 & 2 — SCALE NONE — 6

THE CITY OF LOS ANGELES OR ITS OFFICERS OR AGENTS SHALL NOT BE RESPONSIBLE FOR THE ACCURACY OR COMPLETENESS OF ELECTRONIC COPIES OF THIS PLAN SHEET.

FILE PATH:

TTLB TEMPLATE REVISION DATE:
SHEET ISSUE DATE:
REVISION DATES (DESIGN STAGE)

BUREAU OF ENGINEERING

NO.	REVISION DESCRIPTION	DATE	BY
INDEX	BUILDING -		

RP-300106

ENGINEERING — CITY OF LOS ANGELES

REGISTERED PROFESSIONAL ENGINEER — JAMES H. SIHWE — No. 26903 — Renewal: 9/30/2017 — MECHANICAL — STATE OF CALIFORNIA

DEPARTMENT OF PUBLIC WORKS
CITY OF LOS ANGELES

CITY ENGINEER	TED ALLEN, PE					
ARCHITECTURAL		DATE	26.APR.19	26.APR.19	26.APR.19	26.APR.19
ARCHITECT/ENGINEER : JAMES H SIHWE	LIC. NO. M 26903	DESIGNED BY:	J.S			
		DRAWN BY:	S.W.L			
		CHECKED BY:	J.S/N.W			
		APPROVED BY:	MAHMOOD KARIMZADEH, AIA, DEPUTY CITY ENGINEER			

VERTICAL CONTROL:
HORIZONTAL

SHEET: DETAILS

PROJECT: STUDIO CITY GYMNASIUM

ADDRESS: 12621 RYE STREET, STUDIO CITY, CA 91604

Project Status
PROJECT ISSUE DATE: Project Issue Date

BUREAU OF ENGINEERING — OFFICIAL RECORD

WORK ORDER E170267B

PLAN FILE

DRAWING M402

SHEET 152 OF SHEET 211

16007/STUDIO CITY-REC CENTER/07-29-2015

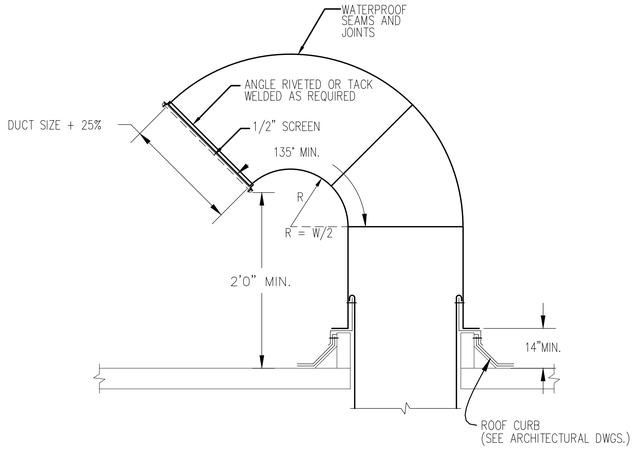

ROUND GOOSENECK

SCALE NONE — 5

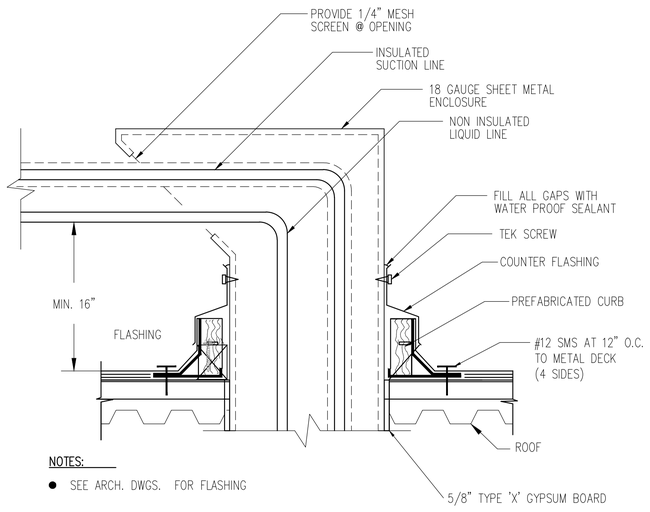

NOTES:

- SEE ARCH. DWGS. FOR FLASHING

REFRIGERANT PIPE CHASE

SCALE NONE — 6

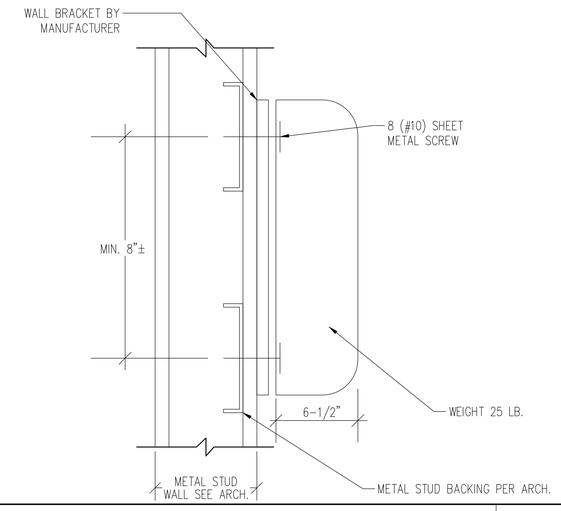

WALL MOUNTING DETAIL FOR DUCTLESS FAN COIL UNIT

SCALE NONE — 7

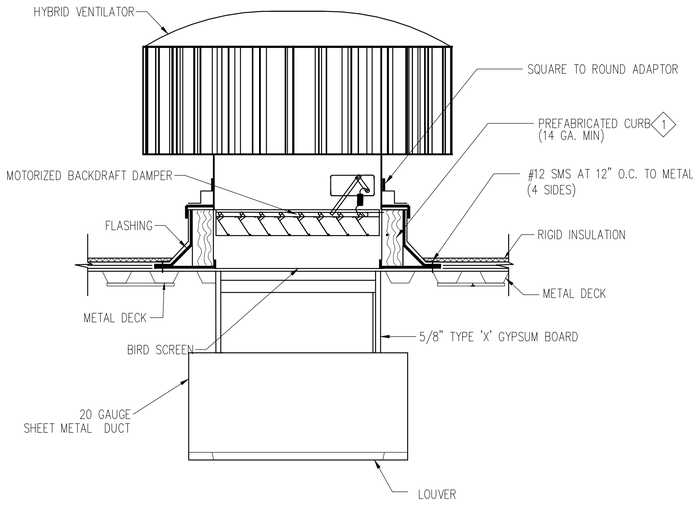

METAL DECK W/RIGID INSULATION

NOTE:

- SEE ARCH. DWG. FOR FLASHING & COUNTERFLASHING DETAILS

1 CONTRACTOR IS RESPONSIBLE TO FIELD MEASURE THE ROOF SLOPE AND ORDER THE TAPERED PITCHED CURB FROM MANUFACTURE.

HYBRID ROOF VENTILATOR (EDMONDS FAN) EF-1 TO EF-8

SCALE NONE — 3

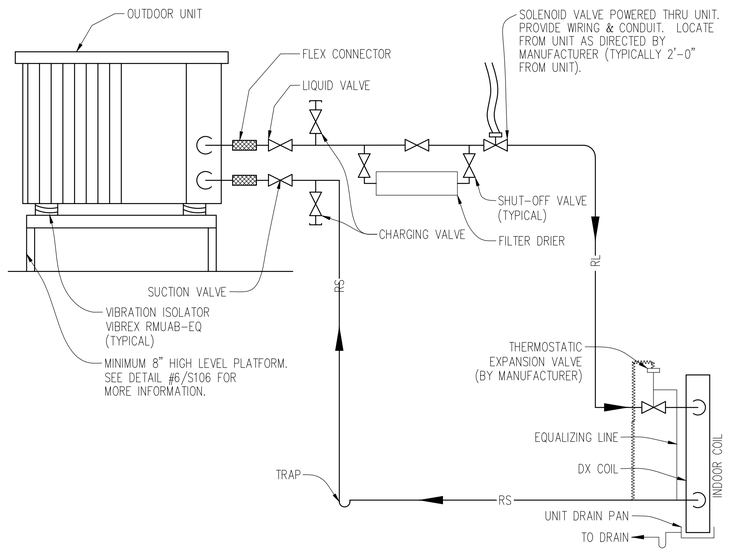

SPLIT SYSTEM REFRIGERATION PIPING DETAIL

SCALE NONE — 4

BRACE ATTACHMENT TO SUPPLEMENTAL STEEL BEAM

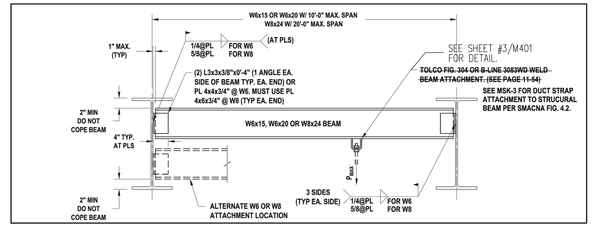

OPTIONAL ATTACHMENT

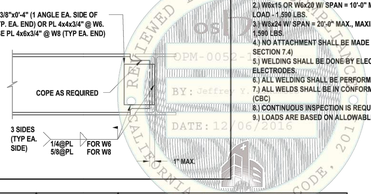

NOTES:
1.) STRUCTURAL ENGINEER OF RECORD SHALL VERIFY ADEQUACY OF STRUCTURE TO RESIST ALL BRACE LOADS.
2.) W6x15 OR W6x20 W/ SPAN = 10'-0" MAX., MAXIMUM TOTAL VERTICAL ALLOWABLE LOAD - 1,590 LBS.
3.) W8x24 W/ SPAN = 20'-0" MAX., MAXIMUM TOTAL VERTICAL ALLOWABLE LOAD - 1,590 LBS.
4.) NO ATTACHMENT SHALL BE MADE IN THE PROTECTION ZONES. (SEE AISC 341, SECTION 7.4)
5.) WELDING SHALL BE DONE BY ELECTRIC SHIELDED ARC PROCESS USING E-70XX ELECTRODES.
6.) ALL WELDING SHALL BE PERFORMED BY A CERTIFIED WELDER.
7.) ALL WELDS SHALL BE IN CONFORMANCE WITH 2013 CALIFORNIA BUILDING CODE. (CBC)
8.) CONTINUOUS INSPECTION IS REQUIRED FOR ALL WELDING.
9.) LOADS ARE BASED ON ALLOWABLE STRENGTH DESIGN.

BEAM SIZE	MAXIMUM BEAM SPAN	P_{MAX} MAX. VERTICAL ALLOWABLE LOAD (LB)(ASD) (TOTAL OF ALL APPLIED INDIVIDUAL LOADS SHALL NOT EXCEED P_{MAX})
W6x15 W6x20	10'-0"	1,590
W8x24	20'-0"	1,590

REVIEWED FOR CONFORMANCE TO OSHPD PRE-APPROVAL REGULATIONS
OSHPD-0057
BY: Jeffrey
DATE: 12/06/2016
PURSUANT TO CALIFORNIA BUILDING CODE, 2013

EATON'S B-LINE BUSINESS
509 WEST MONROE STREET | HIGHLAND, IL 62249
P: (800) 851-7415 | F: (800) 356 1438

Structural Engineer: Mohammad Hariri
California SE No. S3545

PAGE: 11-60
DATE: NOVEMBER 29, 2016

BRACE ATTACHMENT TO SUPPLEMENTAL STEEL BEAM

SCALE NONE — 1

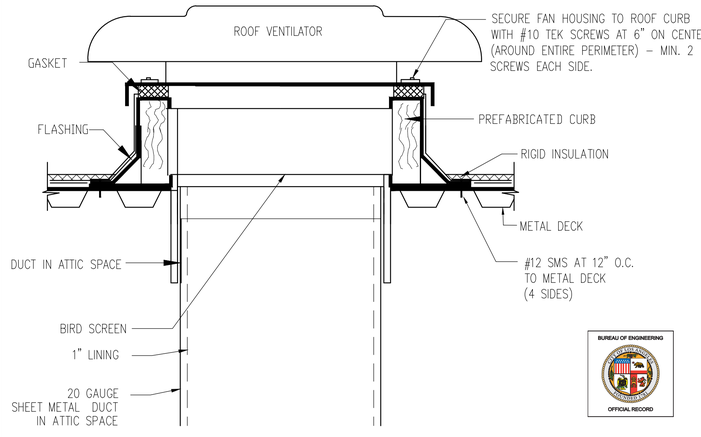

BUREAU OF ENGINEERING OFFICIAL RECORD

GRAVITY O.A. INTAKE VENTILATOR (V-1 TO V-8)

SCALE NONE — 2

BUREAU OF ENGINEERING
ENGINEERING
CITY OF LOS ANGELES

NO.	REVISION DESCRIPTION	DATE	BY

BUILDING -
INDEX RP-300106

REGISTERED PROFESSIONAL ENGINEER — JAMES H. SHWE — No. 26903 — Renewal: 9/30/20 — MECHANICAL — STATE OF CALIFORNIA

DEPARTMENT OF PUBLIC WORKS
CITY OF LOS ANGELES

TED ALLEN, PE
CITY ENGINEER

ARCHITECTURAL	LIC. NO.: M 26903	26.APR.19
ARCHITECT/ENGINEER: JAMES H SHWE		26.APR.19
DESIGNED BY:	J.S	26.APR.19
DRAWN BY:	S.W.L	26.APR.19
CHECKED BY:	J.S/N.W	26.APR.19
APPROVED BY:	MAHMOOD KARIMZADEH, AIA, DEPUTY CITY ENGINEER	

VERTICAL CONTROL: CITY
HORIZONTAL:

SHEET: DETAILS
PROJECT: STUDIO CITY GYMNASIUM
ADDRESS: 12621 RYE STREET, STUDIO CITY, CA 91604

WORK ORDER E170267B
PLAN FILE
DRAWING M403
SHEET 153 OF SHEET 211

Project Status
PROJECT ISSUE DATE: Project Issue Date

THE CITY OF LOS ANGELES OR ITS OFFICERS OR AGENTS SHALL NOT BE RESPONSIBLE FOR THE ACCURACY OR COMPLETENESS OF ELECTRONIC COPIES OF THIS PLAN SHEET.

TTLB TEMPLATE REVISION DATE:
SHEET ISSUE DATE:
REVISION DATES (DESIGN STAGE)
FILE PATH:

DO NOT USE OR DUPLICATE WITHOUT WRITTEN PERMISSION

Portable Pipe Hangers, Inc.
5534 Harvey Wilson Dr.
Houston, TX 77020-6016
713/672-5088 PH 713/672-1170 FAX
800/797-6585

SPECIFICATION

1 BASE

BASE SIZE: 10"x16"x3"
WEIGHT: 5-1/2"LBS
BASE MATERIAL: INJECTION MOLDED HIGH DENSITY/HIGH IMPACT POLYPROPYLENE WITH UV- INHIBITORS AND ANTIOXIDANTS
BASE COLOR: BLACK
BASE DENSITY: 55.8 LB/CU FT (894 KG/CU M)

2 ROD TYPE

DIAMETER: 1/2"
LENGTH: 4" – 16"
FINISH: HOT DIP GALVANIZED OR STAINLESS STEEL

3 CARBON STEEL AND STAINLESS STEEL FRAMING

CHANNEL TYPE: 13/16"x12"
FORM: ROLL-FORMED 3-SIDED TUBULAR SHAPE, PERFORATED WITH 2" SLOTS AT 2"CENTERS ON ONE SIDE
THICKNESS: 12 GUAGE
CARBON STEEL FINISH: HOT DIP GALVANIZED PER ASTM A123
STAINLESS STEEL FINISH: MILL FINISH

4 CARBON STEEL ROLLER

ROLLER TYPE: 3" CAST IRON ROLLER WITH MALLEABLE SOCKETS
CARBON STEEL FINISH: HOT DIP GALVANIZED PER ASTM A 123

5 HARDWARE

NUTS AND WASHERS: HOT DIP GALVANIZED OR STAINLESS STEEL

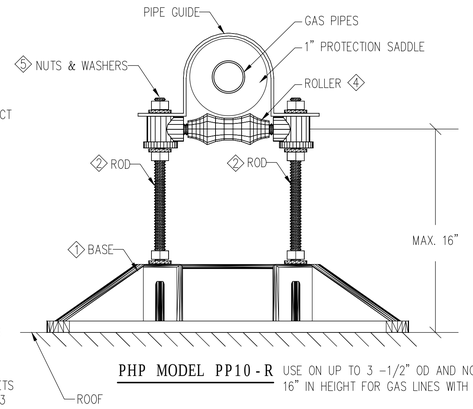

PHP MODEL PP10-R USE ON UP TO 3 -1/2" OD AND NOT EXCEEDING 16" IN HEIGHT FOR GAS LINES WITH A GUIDE

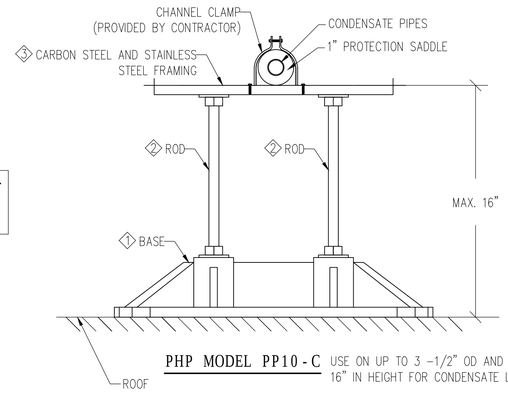

PHP MODEL PP10-C USE ON UP TO 3 -1/2" OD AND NOT EXCEEDING 16" IN HEIGHT FOR CONDENSATE LINES WITH A GUIDE

TYPICAL PIPE SUPPORT ON ROOF

SCALE NONE | 5

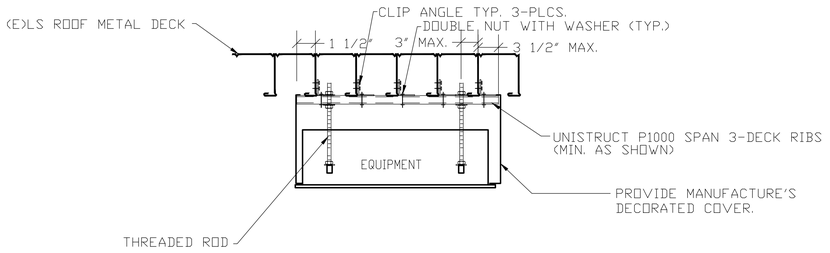

CEILING CASSETTE UNIT INATALLATION DETAIL.

SCALE NONE | 6

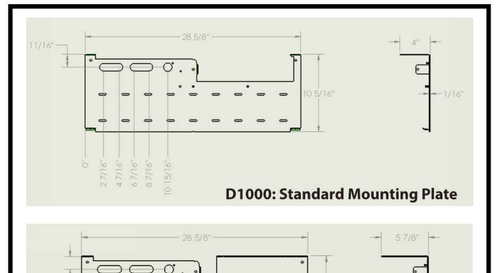

D1000: Standard Mounting Plate

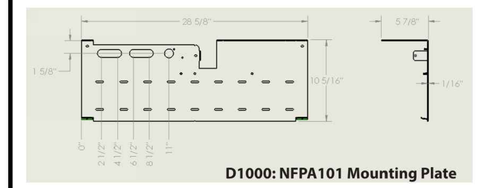

D1000: NFPA101 Mounting Plate

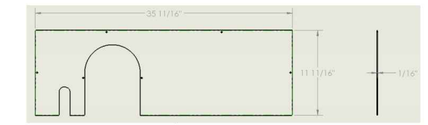

★D1036TC: 30" Top Cover for I unit

★Indicates OPTIONAL component

5

DFP The D1000 Model: D1036-I_-DF Spec & Submittal Version 2.3

MOUNTING PLATE

SCALE NONE | 3

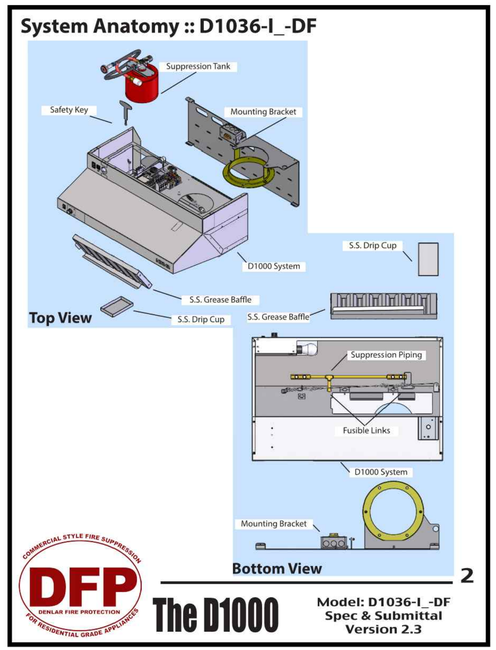

2

DFP The D1000 Model: D1036-I_-DF Spec & Submittal Version 2.3

SYSTEM ANATOMY

SCALE NONE | 1

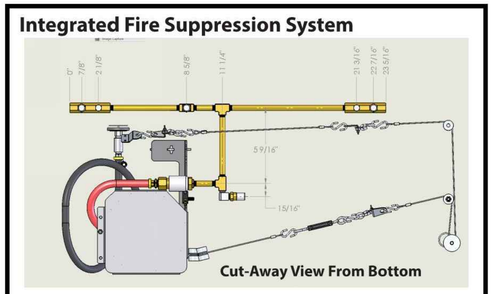

Nozzle Type:
40 degree Conical Spray

Number of Nozzles:
5 protecting the appliance
1 located in the plenum

Chemical Agent:
AMEREX 660
-low PH wet chemical

Bottle Volume:
approx. 1.5 liters

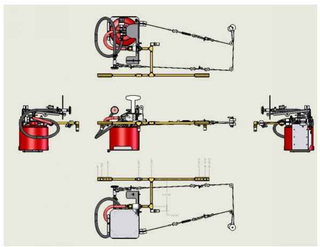

3

DFP The D1000 Model: D1036-I_-DF Spec & Submittal Version 2.3

FIRE SUPPRESSION SYSTEM

SCALE NONE | 4

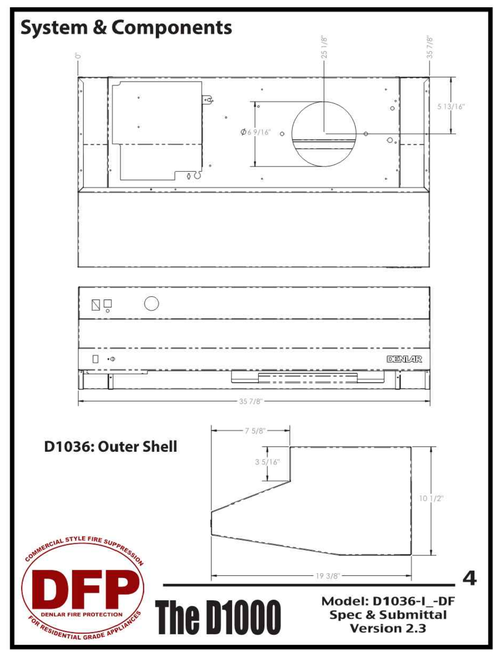

4

DFP The D1000 Model: D1036-I_-DF Spec & Submittal Version 2.3

SYSTEM & COMPONENTS

SCALE NONE | 2

BUREAU OF ENGINEERING

ENGINEERING CITY OF LOS ANGELES

NO.	REVISION DESCRIPTION	DATE	BY

BUILDING -

INDEX RP-300106

REGISTERED PROFESSIONAL ENGINEER JAMES H. SHWE No. 26903 Renewal: 9/30/20 MECHANICAL STATE OF CALIFORNIA

BUREAU OF PUBLIC WORKS

CITY	DATE	
	26.APR.19	
	26.APR.19	
	26.APR.19	
	26.APR.19	
	26.APR.19	

LIC. NO.: M 26903

ARCHITECTURAL

ARCHITECT/ENGINEER : JAMES H SHWE

DESIGNED BY: JS

DRAWN BY: S.W.L

CHECKED BY: J.S/N.W

APPROVED BY: MAHMOOD KARIMZADEH, AIA, DEPUTY CITY ENGINEER

DEPARTMENT OF

TED ALLEN, PE

CITY OF LOS ANGELES

VERTICAL CONTROL:

HORIZONTAL

SHEET DETAILS

PROJECT STUDIO CITY GYMNASIUM

ADDRESS 12621 RYE STREET, STUDIO CITY, CA 91604

WORK ORDER E170267B

PLAN FILE

DRAWING M404

SHEET 154 OF SHEET 211

Project Status

PROJECT ISSUE DATE: Project Issue Date

THE CITY OF LOS ANGELES OR ITS OFFICERS OR AGENTS SHALL NOT BE RESPONSIBLE FOR THE ACCURACY OR COMPLETENESS OF ELECTRONIC COPIES OF THIS PLAN

SHEET:

TTLB TEMPLATE REVISION DATE:

SHEET ISSUE DATE:

FILE PATH:

REVISION DATES (DESIGN STAGE)

BUREAU OF ENGINEERING OFFICIAL RECORD

Panel Field Joint – Detail

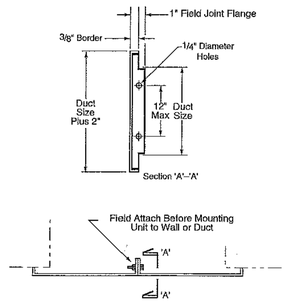

Adjustability

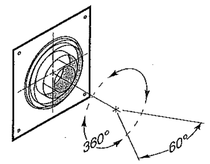

- Adjustment of the concentric rings about the pivotal axis through a 60 degree arch of plus or minus 30 degrees
- Adjustment of the nozzle element about a fixed plane through a 360 degree rotation

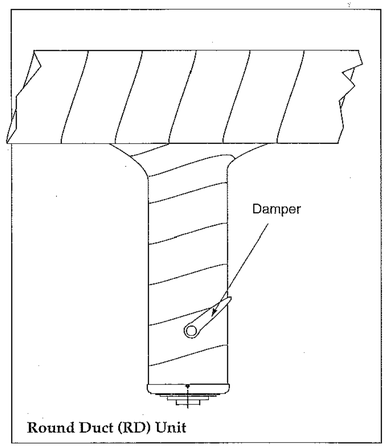

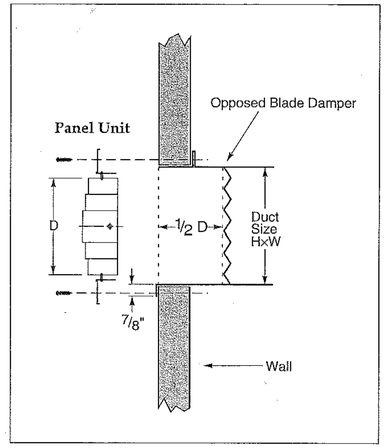

TYPICAL INSTALLATION FOR AIR NOZZLE

SCALE NONE

3

DETAIL-1

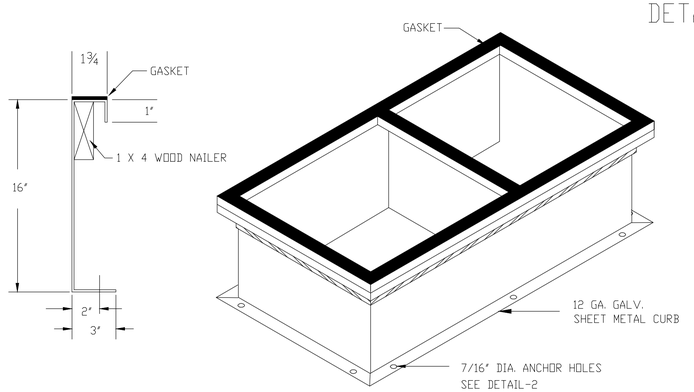

NOTES:

1. FOR ANCHOR REQUIREMENTS AND SEISMIC STRAPS, SEE DETAIL 2, 3.
2. SUBMITTED ROOF CURBS ARE LEVEL. PITCHED ROOF CURBS ARE AVAILABLE UPON REQUEST TO MATCH ROOF SLOPE.
3. ALL DIMENSIONS REQUIRE FINAL REVIEW AT COMMENCEMENT OF PROJECT

MARK	MAKE	MODEL	CURB WT
AHU-1,2	ALLIANCE	7000 CFM	400#

DETAIL-2

NOTE:

1) — INDICATES SEISMIC TIE-DOWN PLATE.
(5) REQUIRED PER LONG SIDE (2) PER SHORT SIDE, SEE DETAIL 3.

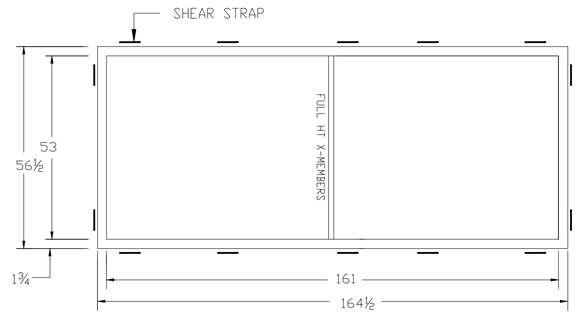

SRC TOP VIEW

DETAIL-3

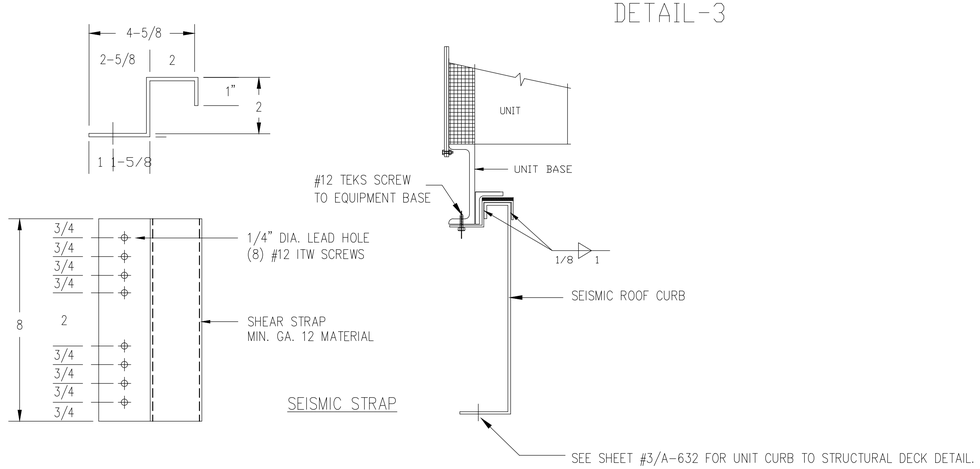

SEISMIC STRAP

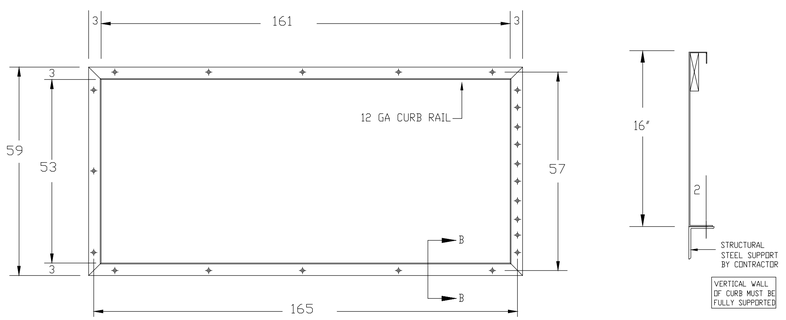

SRC FOOTPRINT

SECTION A-A

NOTES:

1. FOR ANCHORAGE, USE 3/8" DIA. MACHINE BOLTS, A-307
(3) BOLT PER SHORT SIDE & (5) BOLTS PER LONG SIDE SPACED EQUALLY
2. ALL DIMENSIONS REQUIRE FINAL REVIEW AT COMMENCEMENT OF PROJECT.

BUREAU OF ENGINEERING OFFICIAL RECORD

CURB DETAILS FOR AHU-1 & 2

SCALE NONE

1

THE CITY OF LOS ANGELES OR ITS OFFICERS OR AGENTS SHALL NOT BE RESPONSIBLE FOR THE ACCURACY OR COMPLETENESS OF ELECTRONIC COPIES OF THIS PLAN

TTLB TEMPLATE REVISION DATE:
SHEET ISSUE DATE:
FILE PATH:

REVISION DATES (DESIGN STAGE)

BUREAU OF ENGINEERING

ENGINEERING CITY OF LOS ANGELES

NO.	REVISION DESCRIPTION	DATE	BY

INDEX

BUILDING -

RP-300106

REGISTERED PROFESSIONAL ENGINEER JAMES H. SHWE No. 26903 Renewal: 9/30/20 MECHANICAL STATE OF CALIFORNIA

DEPARTMENT OF PUBLIC WORKS

CITY OF LOS ANGELES

	DATE
CITY	
VERTICAL CONTROL:	26.APR.19
HORIZONTAL:	26.APR.19
SHEET: DETAILS	26.APR.19
PROJECT: STUDIO CITY GYMNASIUM	26.APR.19
ADDRESS: 12621 RYE STREET, STUDIO CITY, CA 91604	26.APR.19

TED ALLEN, PE
ARCHITECTURAL
ARCHITECT/ENGINEER : JAMES H SHWE LIC. NO.: M 26903
DESIGNED BY: JS S.W.L
DRAWN BY: S.W.L
CHECKED BY: J.S/N.W
APPROVED BY: MAHMOOD KARIMZADEH, AIA, DEPUTY CITY ENGINEER

Project Status
PROJECT ISSUE DATE: Project Issue Date

WORK ORDER E170267B

PLAN FILE

DRAWING M405

SHEET 155 OF SHEET 211

L:\007-STUDIO CITY-REC CENTER\07-29-2019

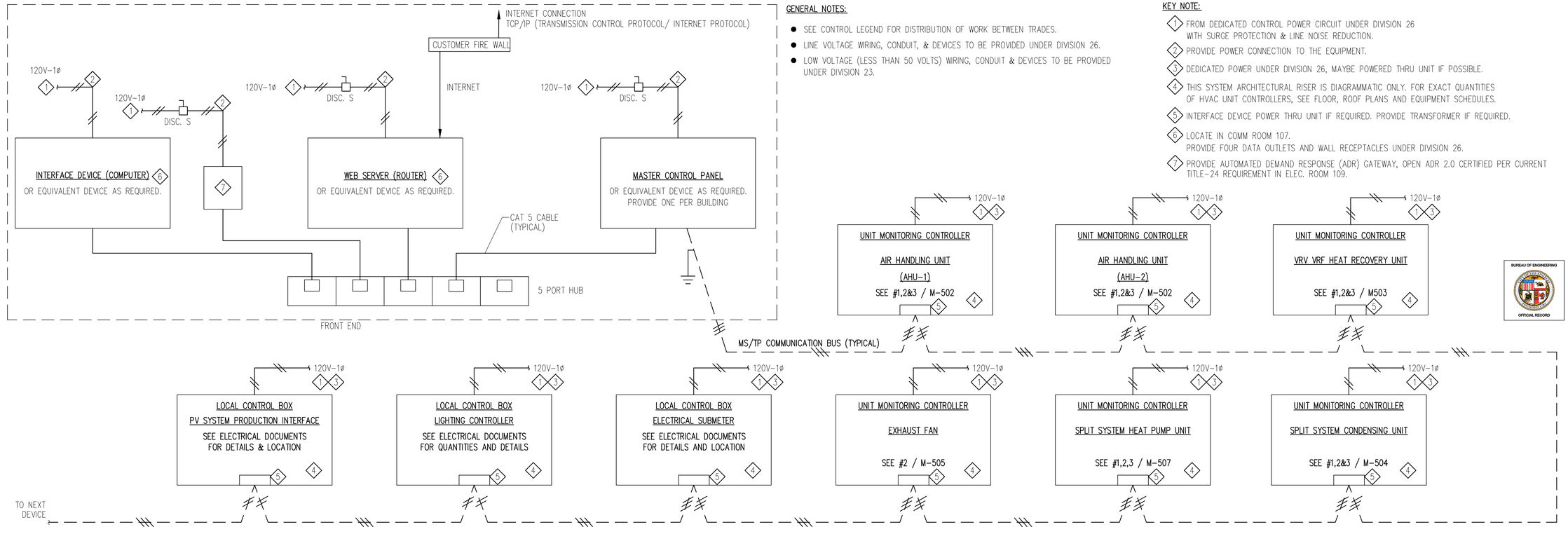

ENERGY MANAGEMENT SYSTEM ARCHITECTURE

SCALE NONE — 1

GENERAL NOTES:

- SEE CONTROL LEGEND FOR DISTRIBUTION OF WORK BETWEEN TRADES.
- LINE VOLTAGE WIRING, CONDUIT, & DEVICES TO BE PROVIDED UNDER DIVISION 26.
- LOW VOLTAGE (LESS THAN 50 VOLTS) WIRING, CONDUIT & DEVICES TO BE PROVIDED UNDER DIVISION 23.

KEY NOTE:

1. FROM DEDICATED CONTROL POWER CIRCUIT UNDER DIVISION 26 WITH SURGE PROTECTION & LINE NOISE REDUCTION.
2. PROVIDE POWER CONNECTION TO THE EQUIPMENT.
3. DEDICATED POWER UNDER DIVISION 26, MAYBE POWERED THRU UNIT IF POSSIBLE.
4. THIS SYSTEM ARCHITECTURAL RISER IS DIAGRAMMATIC ONLY. FOR EXACT QUANTITIES OF HVAC UNIT CONTROLLERS, SEE FLOOR, ROOF PLANS AND EQUIPMENT SCHEDULES.
5. INTERFACE DEVICE POWER THRU UNIT IF REQUIRED. PROVIDE TRANSFORMER IF REQUIRED.
6. LOCATE IN COMM ROOM 107. PROVIDE FOUR DATA OUTLETS AND WALL RECEPTACLES UNDER DIVISION 26.
7. PROVIDE AUTOMATED DEMAND RESPONSE (ADR) GATEWAY, OPEN ADR 2.0 CERTIFIED PER CURRENT TITLE–24 REQUIREMENT IN ELEC. ROOM 109.

HVAC CONTROLS SUMMARY

LOCATION	SYSTEM DESCRIPTION	COMPONENTS	SEQUENCE OF OPERATION
GENERAL	WIRING AND CONDUIT FOR ELECTRICAL SYSTEMS ABOVE 50 VOLTS SHALL BE PROVIDED BY THE ELECTRICAL SYSTEM INSTALLER. WIRING AND CONDUIT FOR ELECTRICAL SYSTEMS THAT ARE 50 VOLTS OR LESS SHALL BE PROVIDED BY THE CONTROL SYSTEM INSTALLER. THE CONTROL SYSTEM SHALL BE DESIGNED, INSTALLED AND ADJUSTED BY THE CONTROLS SYSTEM INSTALLER TO PERFORM THE SEQUENCE OF OPERATIONS INDICATED ON THE DRAWINGS. THE CONTROL DIAGRAMS ARE FOR REFERENCE ONLY.THE SEQUENCE OF OPERATION OF INDUSTRY STANDARD EQUIPMENT SHALL BE INDUSTRY STANDARD AS SET BY THE MANUFACTURER UNLESS NOTED OTHERWISE.		
GYM AREA	CUSTOM AIR HANDLING UNIT W/ VRV VRF HEAT PUMP OUTDOOR UNIT	CUSTOM AIR HANDLING UNIT, VRV VRF OUTDOOR HEAT PUMP, ECONOMIZERS, VARIABLE SPEED SUPPLY AIR FAN, ECOPOWER HYBRID VENTILATORS WITH OPERABLE WALL OPENING (NVT)	SEE SHEET #1,2,3/M–502 FOR CONTROLS. ◇1
OFFICE AREA	VRV VRF HEAT RECOVERY SYSTEM	VRV/VRF OUTDOOR HEAT RECOVERY UNIT, VRV/VRF INDOOR FAN COIL UNIT, ECOPOWER HYBRID VENTILATORS WITH OPERABLE WALL OPENING (NVT)	SEE SHEET #1,2,3,4/M–503 FOR CONTROLS. ◇1
ELECTRICAL/ DATA ROOMS	SPLIT SYSTEM COOLING ONLY	SPLIT SYSTEM OUTDOOR CONDENSING UNIT, & INDOOR FAN COIL UNIT	SEE SHEET #1,2,3/M–504 FOR CONTROLS. ◇1
RESTROOMS & CUSTODIANS	EXHAUST FANS	EXHAUST FANS	SEE SHEET #1,2/M–505 FOR CONTROLS. ◇1
KITCHEN	KITCHEN HOOD SPLIT SYSTEM HEAT PUMP UNIT	KITCHEN FAN FIRE SUPPRESSION ANSUL, SPLIT SYSTEM OUTDOOR HEAT PUMP UNIT, & INDOOR FAN COIL UNIT	SEE SHEET M–506 FOR CONTROLS. ◇1 SEE SHEET #1,2,3/M–507 FOR CONTROLS. ◇1

KEY NOTE:

◇1 PROGRAMMABLE CONTROLLER CAPABLE OF STAND ALONE OPERATION WITH MANUFACTURER'S STANDARD SEQUENCE. INPUT DEVICE SHALL BE INTERFACED WITH EMS FOR OP/START/STOP REMOTE SET POINT CONTROLS, ALARM PROCESSING AND SERVICE SCHEDULING.

EMS SYSTEM REQUIREMENTS

* THE BUILIDNG ENERGY MANAGEMENT AND CONTROL SYSTEM SHALL BE PROVIDED WITH THE FOLLOWING CAPABILITIES:

1. OPTIMAL START / STOP FOR EACH HVAC UNIT, FAN
2. REMOTE SET POINT ADJUSTMENT
3. STATUS REPORTING FOR EACH HVAC UNIT, FAN
4. ALARM PROCESSING
5. AUTOMATED FAULT DETECTION AND DIAGNOSTICS (FDD)
6. DEMAND LIMITING THROUGH A DEMAND METER PROVIDED BY ELECTRICAL
7. AUTOMATED DEMAND MANAGEMENT FUNCTION THROUGH THIRD PARTY AUTOMATIC DEMAND RESPONSE (ADR) SIGNAL WHICH ARE CAPABLE OF THE FOLLOWING: (LEED v4: DEMAND RESPONSE)
   A. STORING PRE–PROGRAMMED DEMAND MANAGEMENT CONTROL STRATEGIES FOR SPECIFIC CONTROLLED EQUIPMENT AND/OR SYSTEMS THAT WILL IN A SAFE AND CONTROLLED MANNER, INCREASE OR DECREASE ELECTRICAL DEMAND WHEN TRIGGERED.
   B. STORE PRE–CONDITIONS FOR TRIGERRING AND RELEASING DESCRETE DEMAND CONTROL STRATEGIES, SUCH AS APPROACHING USER DEFINED DEMAND THRESHOLDS, APPLICABLE ELECTRICITY PRICING POINTS, ETC.
   C. RESPOND TO EXTERNAL SIGNALS AS TRIGEERS FOR IMPLEMENTING AND RELEASING DEMAND MANAGEMENT CONTROL STRATEGIES SUCH AS CONTRACTED DEMAND RESPONSE EVENT. THE FACILITY SHALL EITHER DEMONSTRATE COMPLIANCE WITH OPEN ADR 2.0 OR DEMONSTRATE SIMILAR FUNCTIONALITY VIA AUTOMATED TRIGGERS USING OTHER COMMUNICATIONS PROTOCOLS.
   D. SUPPORT AUTOMATED NOTIFICATION OF A DEMAND RESPONSE EVENT SCHEDULED, THRESHOLD MET, STRATEGIES SCHEDULED FOR TRIGERRING, STRATEGIES EXECUTED AND STRATEGIES RELEASED TO NORMAL CONTROL.
   E. ALLOW FOR REMOTED ACCESS OPT OUT OR CANCELLATION OF ANY DEMAND CONTROL STRATEGY SCHEDULED OR CURRENTLY IN FORCE.
   F. ALLOW FOR REMOTE ACCES USER TRIGGERING OF ANY DEMAND CONTROL STRATEGY NOT CURRENTLY IN FORCE AS WELL AS SCHEDULING TRIGGERING ANY DEMAND CONTROL STRATEGY FOR FUTURE TRIGGERING AND RELEASE.
   G. LOAD SHEDDING THROUGH AN INTERNET SIGNAL FROM THE UTILITY PROVIDER BY INCREASING THE COOLING SET POINT BY 1°F WITH EACH SUCCESSIVE SIGNAL UP TO 5 SIGNAL STEPS.
8. RUNTIME LOGGING FOR EACH HVAC UNIT, FAN
9. MAINTENANCE SCHEDULING FOR EACH HVAC, FAN
10. MAINTENANCE VERIFICATION FOR EACH HVAC, FAN
11. TRENDING OF ALL SENSOR READINGS FOR EACH HVAC UNIT, FAN
12. WEB ACCESSIBLE FROM WORKSTATION OR REMOTE WEB SERVER FOR USER INTERFACE OF ALL THE ABOVE FUNCTIONS
13. INTERACTIVE GRAPHICAL INTERFACES SHALL BE PROVIDED FOR THE FOLLOWINGS:
    A. ARCHITECTURAL FLOOR PLANS INDICATING THE LOCATION OF EACH HVAC UNIT, INTELLIGENT CONTROL DEVICE, CNTROLLED DEVICE (TERMINAL, DAMPER, VALVE), SENSOR (TEMPERATURE, HUMIDITY, CO, CO2, PRESSURE), FAN OR SYMBOLS THAT WILL LEAD TO UNIT OR SYSTEM SCHEMATIC DRAWINGS.
    B. SCHEMATIC DRAWINGS OF EACH HVAC UNIT OR SYSTEM THAT INDICATES THE STATUS / POSITION / READING OF EACH CONTROLLED DEVICE (TERMINAL, DAMPER, VALVE), SENSOR (TEMPERATURE, HUMIDITY, CO, CO2, PRESSURE), FAN ASSOCIATED WITH EACH UNIT OR SYSTEM WHERE REMOTE SET POINT ADJUSTMENT OR READING OF DIAGNOSTIC / ALARM TRIGERRING SENSORS IS REQUIRED.
14. UNOCCUPIED SCHEDULE FOR THE FOLLOWING: (CHPS 2014 EE 5.1)
    A. SETBACK TEMPERATURE CONTROL SO THAT UNITS CAN HEAT DURING UNOCCUPIED MODES. SETBACK TEMPERATURE SETTINGS SHALL BE NO HIGHER THAN 60°F
    B. SCHEDULED CONTROL OF ALL VENTILATION OUTDOOR AIR FANS, EXHAUST FANS AND OUTDOOR AIR DAMPERS TO TURN OFF AND CLOSE DURING UNOCCUPIED PERIODS.
    C. LOCAL OVERRIDE TO OCCUPIED MODE WITH TIMER OF NO MORE THAN FOUR HOURS. REVERT BACK TO NORMAL OPERATION SCHEDULE AFTER NO MORE THAN FOUR HOURS OF LOCAL OVERRIDE.
15. A METER DATA ACQUISITION AND STORAGE SYSTEM FOR ALL ELECTRICAL POWER USED WITHIN THE BUILDING. (CHPS 2014 EE5.2.2)
    A. DATA FROM SYSTEM SHALL AT A MINIMUM RECORD AND STORE EVERY ONE MINUTE.
    B. DATA FROM SYSTEM SHALL BE AVAILABLE TO OPERATOR WITHIN ONE HOUR OF THE TIME THE ENERGY WAS CONSUMED.
    C. SYSTEM TO INCLUDE A USER INTERFACE TO TREND AND ANALYZE STORED DATA.

* DEVICES SUCH AS PROGRAMMABLE CONTROLLERS OR PREPROGRAMMED APPLICATION SPECIFIC CONTROLLERS ARE DEFINED AS INTELLIGENT CONTROL DEVICES:

1. ALL INTELLIGENT CONTROL DEVICES SHALL BE INSTALLED AND ADJUSTED BY THE OEM OR CERTIFIED AUTHORIZED INSTALLERS ONLY.
2. ALL INTELLIGENT CONTROL DEVICES SHALL BE PROVIDED WITH COMPATIBLE INPUT AND OUTPUT DEVICES TO PERFORM THE SEQUENCE OF OPERATION AS INDICATED ON THE BID DOCUMENTS AS A MINIMUM.
3. THE SEQUENCE OF OPERATION OF INTELLIGENT CONTROL DEVICES THAT ARE PROVIDED BY THE MANUFACTURER OF THE CONTROLLED HVAC EQUIPMENT MAY BE THE MANUFACTURER'S STANDARD.
4. THE INTERCOMMUNICATION DEVICES BETWEEN THE INTELLIGENT CONTROL DEVICES SHALL BE COMPATIBLE WITH ALL THE INTELLIGENT CONTROL DEVICES THROUGHT THE ENTIRE SYSTEM NETWORK.
5. ALL INTELLIGENT CONTROL DEVICES SHALL BE PROVIDED WITH NON–VOLATILE MEMORY THAT WILL RETAIN THE LAST SET POINT.
6. ALL INTELLIGENT CONTROL DEVICES SHALL BE PROVIDED WITH TRANSFORMERS, SURGE PROTECTION AND BACKUP POWER AS REQUIRED FOR PROPER FUNCTIONING AND PROTECTION OF THE SYSTEM.
7. ALL INTELLIGENT CONTROL DEVICES THAT ARE NOT INSTALLED INSIDE A UNIT SHALL BE INSTALLED IN A NEMA CABINET THAT IS APPROPRIATE FOR THE INSTALLED LOCATION. NEMA 12 FOR INDOOR, NEMA 3R FOR OUTDOOR.
8. ALL INTELLIGENT CONTROLLERS SHALL BE CAPABLE OF STANDALONE OPERATION WHEN COMMUNICATION WITH THE FRONT END OF PRECEDING / SUBSEQUENT DEVICE IS LOST.

HVAC CONTROLS SUMMARY

SCALE NONE — 1

BUREAU OF ENGINEERING — OFFICIAL RECORD

BUREAU OF ENGINEERING
ENGINEERING
CITY OF LOS ANGELES

NO.	REVISION DESCRIPTION	DATE	BY
INDEX			
BUILDING -			

RP-300106

REGISTERED PROFESSIONAL ENGINEER — JAMES H. SHWE — No. 26903 — Renewal: 9/30/20 — MECHANICAL — STATE OF CALIFORNIA

DEPARTMENT OF PUBLIC WORKS
CITY OF LOS ANGELES

CITY	DATE	
	26.APR.19	
	26.APR.19	
	26.APR.19	
	26.APR.19	
	26.APR.19	

TED ALLEN, PE — LIC. NO.: M 26903
ARCHITECTURAL
ARCHITECT/ENGINEER: JAMES H SHWE
DESIGNED BY: J.S
DRAWN BY: S.W.L
CHECKED BY: J.SIN.W
APPROVED BY: MAHMOOD KARIMZADEH, AIA, DEPUTY CITY ENGINEER

VERTICAL CONTROL:
HORIZONTAL:
SHEET: CONTROLS
PROJECT: STUDIO CITY GYMNASIUM
ADDRESS: 12621 RYE STREET, STUDIO CITY, CA 91604

WORK ORDER: E170267B
PLAN FILE
DRAWING: M501
SHEET 156 OF SHEET 211

Project Status
PROJECT ISSUE DATE: Project Issue Date

THE CITY OF LOS ANGELES OR ITS OFFICERS OR AGENTS SHALL NOT BE RESPONSIBLE FOR THE ACCURACY OR COMPLETENESS OF ELECTRONIC COPIES OF THIS PLAN

TTLB TEMPLATE REVISION DATE:
SHEET ISSUE DATE:
FILE PATH:
REVISION DATES (DESIGN STAGE)

1002071/STUDIO CITY REC CENTER/07-29-2019

SEQUENCE OF OPERATION

FUNCTION	INPUT	CONDITION	ACTION	REMARK
ENABLE	EMS			
ON	EMS	OWNER SCHEDULE OR BY MANUAL OVERRIDE	ON	
OFF	EMS	OWNER SCHEDULE OR BY MANUAL OVERRIDE	OFF	
HYBRID FAN (WIND ASSISTED W/ECM MOTOR) CONDITIONING W/AMBIENT AIR	SPACE TEMP. SENSOR, O.A TEMP. SENSOR, SPACE CO2 SENSOR,	IF BUILDING IS OCCUPIED PER OWNER SCHEDULE	AMBIENT AIR COOLING (NVT AND HYBRID FANS) ENABLE	NVT ENABLE BY EMS. AHU SHALL BE OFF.
		IF O.A TEMP < SET COOLING PT (75° DEFAULT) & SPACE TEMP > SET COOLING PT (75° DEFAULT)	HYBRID VENTILATOR MOTOR SHALL BE ACTIVATED & THE NVT SHALL BE FULLY OPEN TO COOL THE BUILDING MASS.	
		IF O.A TEMP < SET HEATING PT (70° DEFAULT), SPACE TEMP < SET HEATING PT (70° DEFAULT)	THE NVT SHALL BE MODULATED W/HYBRID FAN MOTOR DISABLE TO MAINTAIN SPACE TEMPERATURE AT SET POINT.	
		IF O.A TEMP > SET COOLING PT (75° DEFAULT), BUT HIGHER THAN 65° (SETPOINT ADJUSTABLE BETWEEN 55° TO 65°)	THE NVT SHALL BE FULLY CLOSED AND VENTILATION SHALL BE ACHIEVED THROUGH THE AIR HANDLING UNIT OA INTAKE WITH DCV.	
		IF SPACE CO2 SENSOR IS LOWER THAN SET POINT. (<600 PPM)	THE NVT FULLY CLOSED AND ACTIVATE AIR HANDLING UNIT TO GET OA THROUGH UNIT DAMPERS CONTROLLED BY DCV.	
RAIN SENSOR	RAIN SENSOR,	IF RAIN SENSOR SENSE RAIN.	THE NVT FULLY CLOSED AND ACTIVATE AIR HANDLING UNIT TO GET MINIMUM OA THROUGH UNIT DAMPERS CONTROLLED BY DCV.	
COOLING	SPACE AIR TEMP. SENSOR	IF SPACE AIR TEMP. > SET PT (75°F DEFAULT),	SUPPLY FAN ON, ENABLE COMPRESSOR AND CONDENSER TO CYCLE ON/OFF AND MODULATE. BOTH FAN SPEED AND COIL LEAVING TEMPERATURE THROUGH MANUFACTURER PROVIDED LOGIC FOR OPTIMAL ENERGY PERFORMANCE.	
HEATING	SPACE AIR TEMP. SENSOR	IF SPACE AIR TEMP. < SET PT (70°F DEFAULT) & O.A DAMPER AT MINIMUM POSITION	COMPRESSOR DISABLE, CONDENSER DISABLE, SUPPLY FAN ON. ENABLE VRF HEAT PUMP TO MODULATE AND CYCLE ON AND OFF	
ECONOMIZER	O.A TEMP. & HUMIDITY SENSOR R.A TEMP. & HUMIDITY SENSOR, MIXED AIR TEMP SENSOR	IF O.A ENTHALPY > R.A ENTHALPY	MODULATE O.A DAMPER TO CLOSE TO MINIMUM POSITION AND R.A DAMPER TO OPEN FURTHER TO MAINTAIN SPACE AIR TEMPERATURE SET POINT OF 75°F.	
		IF O.A ENTHALPY < R.A ENTHALPY	O.A DAMPER 100% OPENED, R.A DAMPER 100% CLOSED	
		IF O.A ENTHALPY < R.A ENTHALPY IF SPACE TEMP < SET POINT	MODULATE O.A AND R.A DAMPERS TO MAINTAIN A MIXED AIR TEMPERATURE SET POINT OF 53°F.	
HUMIDITY SENSOR	OA. HUMIDITY SENSOR & SPACE HUMIDITY SENSOR,	IF SPACE HUMIDITY LEVEL IS LESS THAN 30%	THE NVT FULLY CLOSED AND ACTIVATE AIR HANDLING UNIT TO GET MINIMUM OA THROUGH UNIT DAMPERS CONTROLLED BY DCV.	
DCV	SPACE CO2 SENSOR	IF SPACE CO2 LEVEL > SET POINT (APPROXIMATE 1000 PPM DEFAULT)	MODULATE AHU O.A DAMPER TO OPEN AND R.A DAMPER TO CLOSE FURTHER TO MAINTAIN SET POINT.	
SPACE PRESSURE	DIFFERENTIAL PRESSURE SENSOR SPACE STATIC PRESSURE TRANSDUCER	IF SPACE PRESSURE > SET POINT (0.075" W.C. DEFAULT)	ACTIVATE EXHAUST/RELIEF FAN OF AHU, MODULATE TO MAINTAIN SET POINT	
FIRE	TOTAL COVERAGE SMOKE DETECTION SYSTEM	SMOKE DETECTION	A/C UNIT AND ALL ASSOCIATED FANS (SUPPLY, RELIEF, EXHAUST) DEACTIVATED.	
SAFETY	EMS	INOPERATION OF ANY FAN OR COMPRESSOR, LOW EVAPORATOR PRESSURE, HIGH CONDENSER PRESSURE, FREEZESTAT, GAS VALVE, HIGH-TEMPERATURE LIMIT, INDUCED-DRAFT MOTOR SPEED, FLAME ROLLOUT	SHUT DOWN AND ALARM	
MAINTENANCE	EMS	CLOGGED FILTER	ALARM	
		MANUFACTURER REQUIRED OR RECOMMENDED ALARMS	ALARM	
		MANUFACTURER RECOMMENDED SCHEDULE	REMIND MAINTENANCE PERSON & RECORD COMPLETION.	

NOTES:

* SUFFICIENT TIME DELAY SHALL BE PROVIDED BETWEEN EACH CONTROL STEP TO PREVENT RAPID CYCLING OF EQUIPMENT.

SEQUENCE OF OPERATION

SCALE NONE | 3

KEY NOTES:

1. FROM DEDICATED CONTROL POWER CIRCUIT UNDER DIVISION 26 WITH SURGE PROTECTION & LINE NOISE REDUCTION.
2. PROVIDE ALL SAFETY CONTROLS REQUIRED PER CMC & CAC TITLE 24 CURRENT EDITIONS

GENERAL NOTES:

- SEE CONTROL LEGEND AND SPECIFICATIONS FOR PROPOSED DISTRIBUTION OF WORK BETWEEN TRADES. FINAL DETERMINATION BY CONTRACTOR.
- LINE VOLTAGE WIRING, CONDUIT & DEVICES TO BE PROVIDED UNDER DIVISION 26.
- LOW VOLTAGE (LESS THAN 50 VOLTS) WIRING, & DEVICES TO BE PROVIDED UNDER DIVISION 23. SEE ELECTRICAL DWG. FOR LOW VOLTAGE CONDUIT PATH.

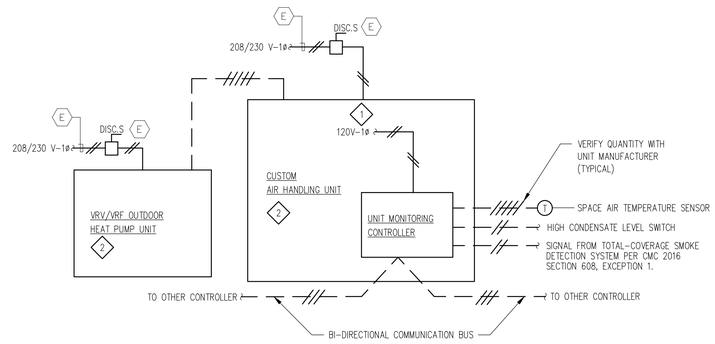

CONTROLS AND POWER WIRING SCHEMATIC

SCALE NONE | 2

GENERAL NOTES:

- SEE CONTROL LEGEND AND SPECIFICATIONS FOR PROPOSED DISTRIBUTION OF WORK BETWEEN TRADES. FINAL DETERMINATION BY CONTRACTOR.
- LINE VOLTAGE WIRING, CONDUIT & DEVICES TO BE PROVIDED UNDER DIVISION 26.
- LOW VOLTAGE (LESS THAN 50 VOLTS) WIRING, & DEVICES TO BE PROVIDED UNDER DIVISION 23. SEE ELECTRICAL DWG. FOR LOW VOLTAGE CONDUIT PATH.

KEY NOTES:

1. FROM DEDICATED CONTROL POWER CIRCUIT UNDER DIVISION 26 WITH SURGE PROTECTION & LINE NOISE REDUCTION.
2. POWER TO THE DEVICE SHALL BE PROVIDED BY CONTROL CONTRACTOR.
3. PROVIDE ALL SAFETY CONTROLS REQUIRED PER CMC & CAC TITLE 24 CURRENT EDITIONS.
4. THE POINTS AND FUNCTIONS IN THIS DIAGRAM ARE PROVIDED AS A REFERENCE ONLY. POINTS AND FUNCTIONS PROVIDED BY THE MANUFACTURER ON FACTORY INSTALLED CONTROLLERS AS A STANDARD WILL BE CONSIDERED SUFFICIENT. PROGRAMMABLE CONTROLLER CAPABLE OF STAND ALONE OPERATION WITH MANUFACTURER'S STANDARD SEQUENCE. INPUT DEVICE SHALL BE INTERFACED WITH EMS FOR OP/START/STOP REMOTE SET POINT CONTROLS ALARM PROCESSING AND SERVICE SCHEDULING.
5. CO2 SENSORS SHALL BE CERTIFIED BY THE MANUFACTURER TO BE ACCURATE WITHIN PLUS OR MINUS 75 PPM AT A 600 AND 1000 PPM CONCENTRATION WHEN MEASURED AT SEA LEVEL AND 25° C, FACTORY CALIBRATED AND CERTIFIED BY THE MANUFACTURER TO REQUIRE CALIBRATION NO MORE FREQUENTLY THAN ONCE EVERY 5 YEARS. UPON DETECTION OF SENSOR FAILURE, THE SYSTEM SHALL PROVIDE A SIGNAL WHICH RESETS TO SUPPLY THE MINIMUM QUANTITY OF OUTSIDE AIR TO LEVELS REQUIRED BY CEC TABLE 120.1-A (MINIMUM VENTILATION RATE) TO THE ZONE SERVICED BY THE SENSOR AT ALL TIMES THAT THE ZONE IS OCCUPIED.
6. MODEL FOR SPACE TEMPERATURE, HUMIDITY AND CO2 COMBINATION IS ALSO ACCEPTABLE.

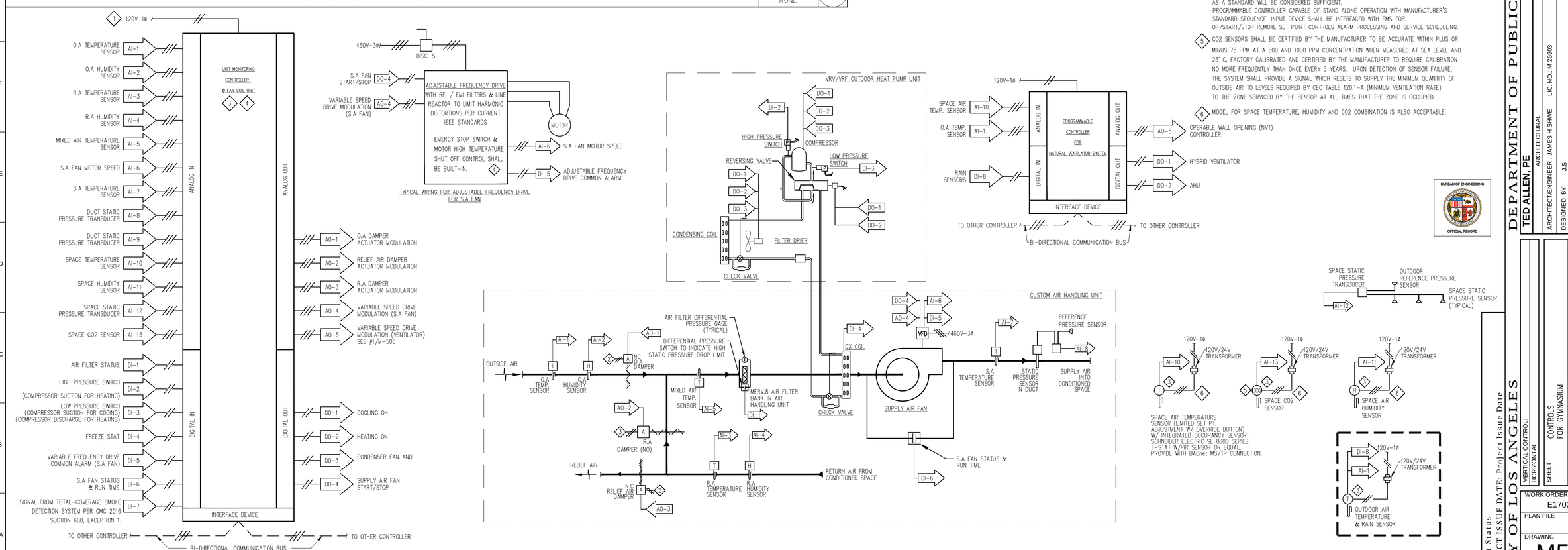

HVAC AIR HANDLER UNIT WITH VRV VRF OUTDOOR HEAT PUMP CONTROLS (HP-18/1,HP-18/2)

SCALE NONE | 1

THE CITY OF LOS ANGELES OR ITS OFFICERS OR AGENTS SHALL NOT BE RESPONSIBLE FOR THE ACCURACY OR COMPLETENESS OF ELECTRONIC COPIES OF THIS PLAN SHEET.

FILE PATH:

TTLB TEMPLATE REVISION DATE:

SHEET ISSUE DATE:

REVISION DATES (DESIGN STAGE)

BUREAU OF ENGINEERING

ENGINEERING CITY OF LOS ANGELES

NO.	REVISION DESCRIPTION	DATE	BY
INDEX			

BUILDING - RP-300106

REGISTERED PROFESSIONAL ENGINEER JAMES H. SHWE No. 26903 Renewal: 9/30/20 MECHANICAL STATE OF CALIFORNIA

DEPARTMENT OF PUBLIC WORKS

CITY OF LOS ANGELES

CITY	
DATE	26.APR.19
	26.APR.19
	26.APR.19
	26.APR.19
	26.APR.19
ENGINEER	

TED ALLEN, PE

ARCHITECTURAL

ARCHITECT/ENGINEER : JAMES H SHWE LIC. NO.: M 26903

DESIGNED BY: J.S

DRAWN BY: S.W.L

CHECKED BY: J.SIN.W

APPROVED BY: MAHMOOD KARIMZADEH, AIA, DEPUTY CITY ENGINEER

BUREAU OF ENGINEERING OFFICIAL RECORD

VERTICAL CONTROL:

HORIZONTAL:

SHEET: CONTROLS FOR GYMNASIUM

PROJECT: STUDIO CITY GYMNASIUM

ADDRESS: 12621 RYE STREET, STUDIO CITY, CA 91604

Project Status

PROJECT ISSUE DATE: Project Issue Date

WORK ORDER E170267B

PLAN FILE

DRAWING M502

SHEET 157 OF SHEET 211

15007/STUDIO CITY REC CENTER/07-29-2019

SEQUENCE OF OPERATION

FUNCTION	INPUT	CONDITION	ACTION	REMARK
ENABLE	EMS			
ON	EMS	OWNER SCHEDULE OR BY MANUAL OVERRIDE	ON	
OFF	EMS	OWNER SCHEDULE OR BY MANUAL OVERRIDE	OFF	
COOLING	SPACE AIR TEMP. SENSOR	IF SPACE AIR TEMP. > SET PT (75°F DEFAULT),	SUPPLY FAN ACTIVATE, ENABLE COMPRESSOR AND CONDENSER TO CYCLE ON/OFF AND MODULATE, BOTH FAN SPEED AND COIL LEAVING TEMPERATURE THROUGH MANUFACTURER PROVIDED LOGIC FOR OPTIMAL ENERGY PERFORMANCE.	
HEATING	SPACE AIR TEMP. SENSOR	IF SPACE AIR TEMP. < SET PT (72°F DEFAULT) & O.A DAMPER AT MINIMUM POSITION	COMPRESSOR DISABLE, CONDENSER DISABLE, SUPPLY FAN ACTIVATE. ENABLE VRF HEAT RECOVERY UNIT TO MODULATE AND CYCLE ON AND OFF	
NATURAL VENTILATION	SPACE TEMP. SENSOR, O.A TEMP. SENSOR, SPACE CO2 SENSOR,	IF O.A TEMP < SET COOLING PT (75° DEFAULT) & SPACE TEMP > SET COOLING PT (75° DEFAULT)	HYBRID VENTILATOR MOTOR SHALL BE ACTIVATED & THE NVT SHALL BE FULLY OPEN.	
		IF O.A TEMP < SET HEATING PT (70° DEFAULT), SPACE TEMP < SET HEATING PT (70° DEFAULT)	THE NVT SHALL BE MODULATED TO A MORE CLOSED POSITION TO MAINTAIN SPACE TEMPERATURE AT SET POINT.	
		IF O.A TEMP > SET COOLING PT (75° DEFAULT)	THE NVT SHALL BE FULLY CLOSED AND VENTILATION SHALL BE ACHIEVED THROUGH THE AIR HANDLING UNIT OA INTAKE WITH DCV.	
		IF SPACE CO2 SENSOR IS LOWER THAN SET POINT. (<600 PPM)	THE NVT FULLY AND ACTIVATE AIR HANDLING UNIT TO GET OA THROUGH UNIT DAMPERS CONTROLLED BY DCV.	
FIRE	TOTAL COVERAGE SMOKE DETECTION SYSTEM	SMOKE DETECTION	A/C UNIT AND ALL ASSOCIATED FANS (SUPPLY, RELIEF, EXHAUST) DEACTIVATED.	
SAFETY	EMS	INOPERATION OF ANY FAN OR COMPRESSOR, LOW EVAPORATOR PRESSURE, HIGH CONDENSER PRESSURE, FREEZESTAT, GAS VALVE, HIGH-TEMPERATURE LIMIT, INDUCED-DRAFT MOTOR SPEED, FLAME ROLLOUT	SHUT DOWN AND ALARM	
MAINTENANCE	EMS	CLOGGED FILTER	ALARM	
		MANUFACTURER REQUIRED OR RECOMMENDED ALARMS	ALARM	
		MANUFACTURER RECOMMENDED SCHEDULE	REMIND MAINTENANCE PERSON & RECORD COMPLETION.	

SEQUENCE OF OPERATION — SCALE NONE — 3

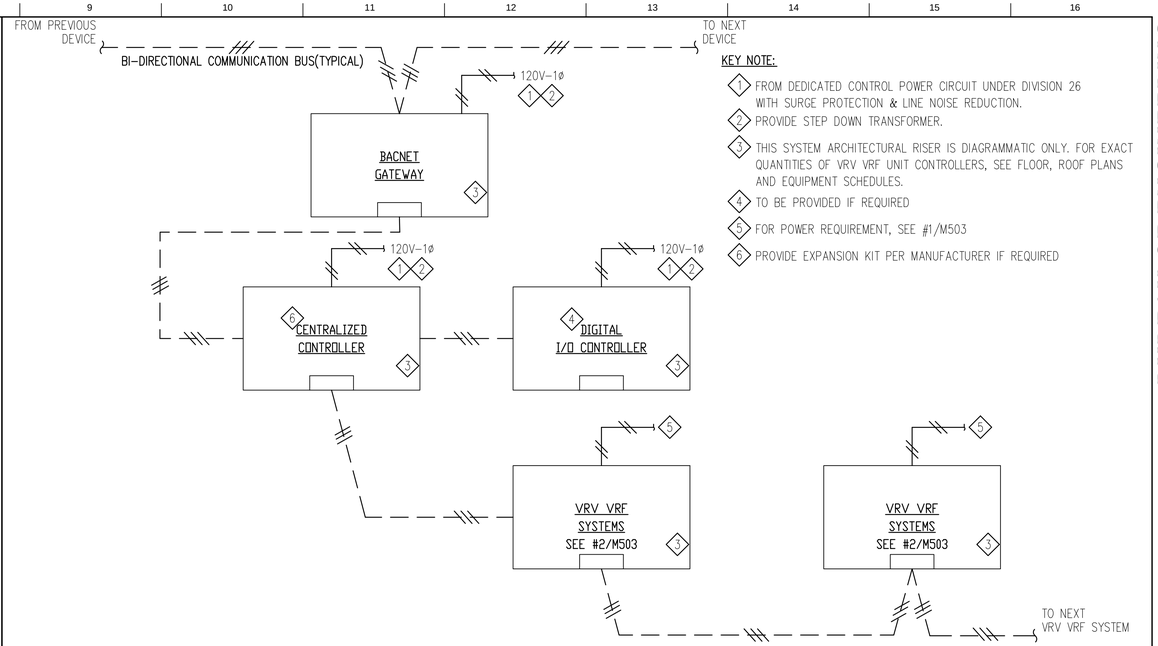

TYPICAL VRV VRF SYSTEM ARCHITECTURE — SCALE NONE — 1

11. ELECTRICAL WORK

11-4. Power Supply Examples

11-4-1. PURY-P72, 96, 120, 144, 168TLMU/YLMU

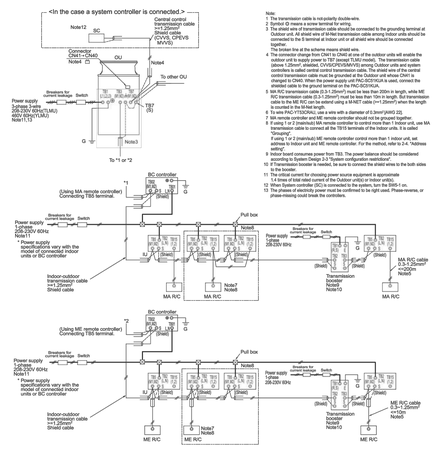

Symbol		Model	Minimum Wire thickness: Power wire <mm²/AWG>	G wire <mm²/AWG>
OU	Outdoor unit	PURY-P72TLMU	5.3/10	5.3/10
IU	Indoor unit	PURY-P96TLMU	8.4/8	8.4/8
SC	System controller	PURY-P120TLMU	13.3/6	13.3/6
MA R/C	MA remote controller	PURY-P144TLMU	21.2/4	21.2/4
ME R/C	ME remote controller	PURY-P168TLMU	21.2/4	21.2/4
		PURY-P72YLMU	2.1/14	2.1/14
		PURY-P96YLMU	3.3/12	3.3/12
		PURY-P120YLMU	5.3/10	5.3/10
		PURY-P144YLMU	5.3/10	5.3/10
		PURY-P168YLMU	8.4/8	8.4/8

Note:
1 The transmission cable is not-polarity double-wire.
2 Symbol ⊕ means a screw terminal for wiring.
3 The shield wire of transmission cable should be connected to the grounding terminal at Outdoor unit. All shield wire of M-Net transmission cable among indoor units should be connected to the S terminal at indoor unit or all shield wire should be connected together.
4 Do not loop the S terminal in the way that only some of the indoor units will disable the outdoor unit to supply power to TB7 (except TLMU model). The transmission cable connected to the S terminal at Outdoor unit will disable the outdoor unit and all indoor unit controllers to collect central control transmission cable. The shield wire of the central control transmission cable must be grounded at the Outdoor unit whose DIP switch SW1-1 is turned ON. When the optional AC Smart Controller (PAC-SC51KUA) is used, connect the shielded cable to the ground terminal on the PAC-SC51KUA.
5 MA R/C transmission cable (0.3-1.25mm²) must be less than 200m in length, while ME R/C transmission cable (0.3-1.25mm²) must be less than 10m in length. But transmission cable to the ME R/C can be extend using a M-NET cable (=<1.25mm²) where the length is counted in the 200m range.
6 To wire PAC-YT53CRAU, use a wire with a diameter of 0.3mm²(AWG 22).
7 MA remote controller and ME remote controller should not be grouped together.
8 If using 1 or 2 (matched) MA remote controller to control more than 1 Indoor unit, use MA transmission cable to connect all the TB15 terminals of the Indoor units. It is called "Grouping".
If using 1 or 2 (matched) ME remote controller control more than 1 Indoor unit, set address to Indoor unit and ME remote controller. For the method, refer to 2-4. "Address setting".
9 Indoor board consumes power from TB3. The power balance should be considered according to System Design 3-3 "System configuration restrictions".
10 If Transmission booster is needed, be sure to connect the shield wires to the both sides to the booster.
11 The critical current for choosing power source equipment is approximate 1.4 times of total rated current of the Outdoor unit(OU or Indoor unit(IU).
12 When System controller (SC) is connected to the system, turn the SW5-1 on.
13 Symbol ⊖ means a terminal which is connected to the chassis(Earth) to be right used. Phase-reverse, or phase-missing could break the controllers.

11-4-2. PURY-P144, 168, 192, 216, 240, 264, 288, 312, 336TSLMU/YSLMU

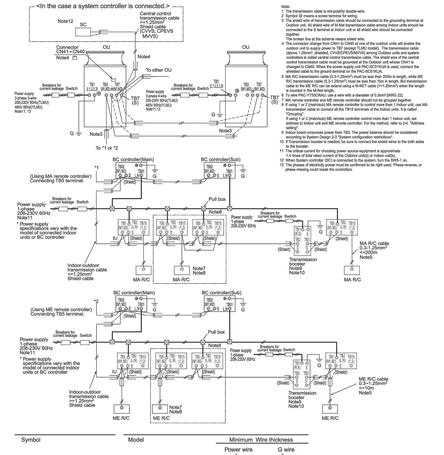

Symbol		Model	Minimum Wire thickness: Power wire <mm²/AWG>	G wire <mm²/AWG>
OU	Outdoor unit	PURY-P72TLMU	5.3/10	5.3/10
IU	Indoor unit	PURY-P96TLMU	8.4/8	8.4/8
SC	System controller	PURY-P120TLMU	13.3/6	13.3/6
MA R/C	MA remote controller	PURY-P144TLMU	21.2/4	21.2/4
ME R/C	ME remote controller	PURY-P168TLMU	21.2/4	21.2/4
		PURY-P72YLMU	2.1/14	2.1/14
		PURY-P96YLMU	3.3/12	3.3/12
		PURY-P120YLMU	5.3/10	5.3/10
		PURY-P144YLMU	5.3/10	5.3/10
		PURY-P168YLMU	8.4/8	8.4/8

Note:
1 The transmission cable is not-polarity double-wire.
2 Symbol ⊕ means a screw terminal for wiring.
3 The shield wire of transmission cable should be connected to the grounding terminal at Outdoor unit. All shield wire of M-Net transmission cable among indoor units should be connected to the S terminal at Indoor unit or all shield wire should be connected together.
4 Do not loop the S terminal in the way that only some of the indoor units will disable the outdoor unit to supply power to TB7 (except TLMU model). The transmission cable connected to the S terminal at Outdoor unit will disable the outdoor unit and all indoor unit controllers to collect central control transmission cable. The shield wire of the central control transmission cable must be grounded at the Outdoor unit whose DIP is turned ON. When the optional AC Smart Controller (PAC-SC51KUA) is used, connect the shielded cable to the ground terminal on the PAC-SC51KUA.
5 MA R/C transmission cable (0.3-1.25mm²) must be less than 200m in length, while ME R/C transmission cable (0.3-1.25mm²) must be less than 10m in length. But transmission cable to the ME R/C can be extend using a M-NET cable (=<1.25mm²) where the length is counted in the 200m range.
6 To wire PAC-YT53CRAU, use a wire with a diameter of 0.3mm²(AWG 22).
7 MA remote controller and ME remote controller should not be grouped together.
8 If using 1 or 2 (matched) MA remote controller to control more than 1 Indoor unit, use MA transmission cable to connect all the TB15 terminals of the Indoor units. It is called "Grouping".
If using 1 or 2 (matched) ME remote controller control more than 1 Indoor unit, set address to Indoor unit and ME remote controller. For the method, refer to 2-4. "Address setting".
9 Indoor board consumes power from TB3. The power balance should be considered according to System Design 3-3 "System configuration restrictions".
10 If Transmission booster is needed, be sure to connect the shield wires to the both sides to the booster.
11 The critical current for choosing power source equipment is approximate 1.4 times of total rated current of the Outdoor unit(OU or Indoor unit(IU).
12 When System controller (SC) is connected to the system, turn the SW5-1 on.
13 Symbol ⊖ means a terminal which is connected to the chassis(Earth) to be right used. Phase-reverse, or phase-missing could break the controllers.

R2-L-134 — PURY-P-T(S)LMU-A, -Y(S)LMU-A (November 2015) — MITSUBISHI ELECTRIC CORPORATION — © 2015 Mitsubishi Electric US, Inc.

R2-L-135 — MITSUBISHI ELECTRIC CORPORATION — PURY-P-T(S)LMU-A, -Y(S)LMU-A (November 2015) — © 2015 Mitsubishi Electric US, Inc.

TYPICAL VRV VRF OUTDOOR UNIT ELECTRICAL WIRING DIAGRAM — SCALE NONE — 4

DIAGRAM SYMBOL LEGEND	
DISPLAY	DESCRIPTION
——#——	POWER WIRE
————	CONTROL WIRE
————	REF. PIPE

PIPING LIST			
SYMBOL	BRANCH PIPE SIZE	MODEL NAME & Reducer	
		SYMBOL	LIQUID PIPE/GAS PIPE SIZE
P1	1/4	/	1/2
P2	3/8	/	5/8
P3	3/8	1/4 /	7/8
P4	1-1/8	/	1-1/8
P5			
P6	3/4	/	7/8
P7			

Additional refrigerant charge is needed depending on the size and length of extended piping. Please refer the amount of pre-charge and the formula of calculation which is mentioned on the data book.
1.25mm²(16 AWG) : 1.25mm²(16 AWG) or more. 0.75mm²(20 AWG) : between 0.5mm²(24 AWG) and 0.75mm²(20 AWG).

SYSTEM SCHEMATIC DWG.

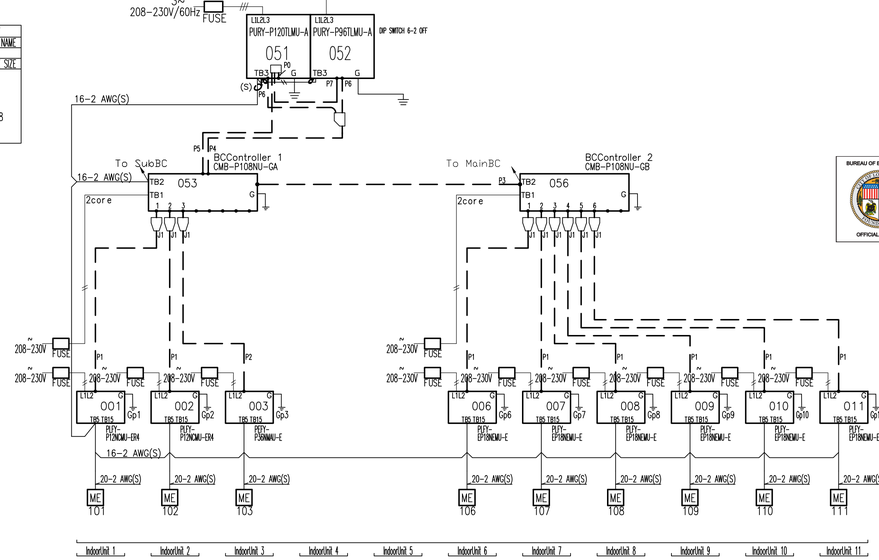

REMARKS
Comments: THIS DIAGRAM IS SCHEMATIC ONLY. VERIFY PIPES AND BRANCH CONTROLLER SIZING WITH MANUFACTURERS BEFORE BID.

TYPICAL VRF SYSTEM CONTROLS WIRING AND PIPING DIAGRAM — SCALE NONE — 2

BUREAU OF ENGINEERING — OFFICIAL RECORD

DEPARTMENT OF PUBLIC WORKS
CITY OF LOS ANGELES

ENGINEERING — CITY OF LOS ANGELES

NO.	REVISION DESCRIPTION	DATE	BY
INDEX			

BUILDING - RP-300106

REGISTERED PROFESSIONAL ENGINEER — JAMES H. SHWE — No. 26903 — Renewal: 9/30/20 — MECHANICAL — STATE OF CALIFORNIA

CITY	DATE	BY
VERTICAL CONTROL:	26.APR.19	
HORIZONTAL:	26.APR.19	
	26.APR.19	
	26.APR.19	
	26.APR.19	
	26.APR.19	ENGINEER

TED ALLEN, PE — ARCHITECTURAL — ARCHITECT/ENGINEER : JAMES H SHWE — LIC. NO. : M 26903
DESIGNED BY: J.S
DRAWN BY: S.W.L
CHECKED BY: J.S/N.W
APPROVED BY: MAHMOOD KARIMZADEH, AIA, DEPUTY CITY ENGINEER

SHEET: CONTROLS FOR COMMUNITY ROOM & OFFICE
PROJECT: STUDIO CITY GYMNASIUM
ADDRESS: 12621 RYE STREET, STUDIO CITY, CA 91604

Project Status
PROJECT ISSUE DATE: Project Issue Date

WORK ORDER E170267B
PLAN FILE
DRAWING M503
SHEET 158 OF SHEET 211

E-6007/STUDIO CITY-REC CENTER/07-29-2019

TTLB TEMPLATE REVISION DATE:
SHEET ISSUE DATE:
REVISION DATES (DESIGN STAGE)
FILE PATH:

THE CITY OF LOS ANGELES OR ITS OFFICERS OR AGENTS SHALL NOT BE RESPONSIBLE FOR THE ACCURACY OR COMPLETENESS OF ELECTRONIC COPIES OF THIS PLAN SHEET.

SEQUENCE OF OPERATION

FUNCTION	INPUT	CONDITION	ACTION	REMARK
ENABLE	EMS			
ON	EMS	OWNER SCHEDULE OR BY MANUAL OVERRIDE	ON	
OFF	EMS	OWNER SCHEDULE OR BY MANUAL OVERRIDE	OFF	
COOLING	SPACE AIR TEMP. SENSOR	IF SPACE AIR TEMP. > SET PT (75℉ DEFAULT),	SUPPLY FAN ON, ENABLE COMPRESSOR AND CONDENSER TO MODULATE AND CYCLE ON AND OFF	
SAFETY	EMS	INOPERATION OF ANY FAN OR COMPRESSOR, LOW EVAPORATOR PRESSURE, HIGH CONDENSER PRESSURE, FREEZESTAT, HIGH CONDENSATE LEVEL SWITCH	SHUT DOWN AND ALARM	
MAINTENANCE	EMS	CLOGGED FILTER	ALARM	
		MANUFACTURER REQUIRED OR RECOMMENDED ALARMS	ALARM	
		MANUFACTURER RECOMMENDED SCHEDULE	REMIND MAINTENANCE PERSON & RECORD COMPLETION.	

NOTES:

- SUFFICIENT TIME DELAY SHALL BE PROVIDED BETWEEN EACH CONTROL STEP TO PREVENT RAPID CYCLING OF EQUIPMENT.

SEQUENCE OF OPERATION — SCALE NONE — 3

KEY NOTES:

1. DEDICATED POWER UNDER DIVISION 16, MAYBE POWERED THRU UNIT IF POSSIBLE.
2. PROVIDE ALL SAFETY CONTROLS REQUIRED PER CMC & CAC TITLE 24 CURRENT EDITIONS

GENERAL NOTES:

- SEE CONTROL LEGEND AND SPECIFICATIONS FOR PROPOSED DISTRIBUTION OF WORK BETWEEN TRADES. FINAL DETERMINATION BY CONTRACTOR.
- LINE VOLTAGE WIRING, CONDUIT, & DEVICES TO BE PROVIDED UNDER DIVISION 26.
- LOW VOLTAGE (LESS THAN 50 VOLTS) WIRING, CONDUIT & DEVICES TO BE PROVIDED UNDER DIVISION 23.

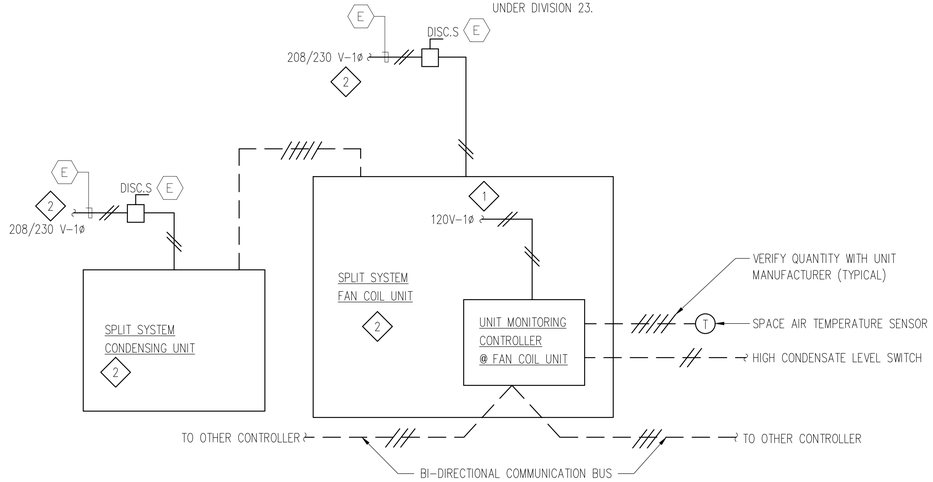

CONTROLS AND POWER WIRING SCHEMATIC — SCALE NONE — 2

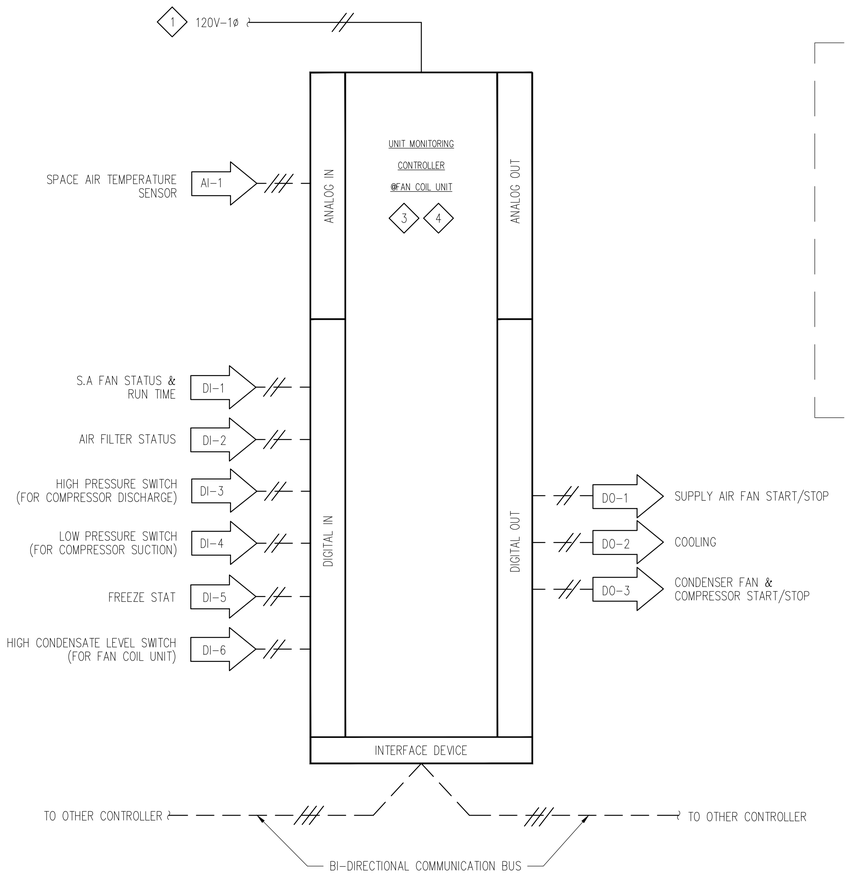

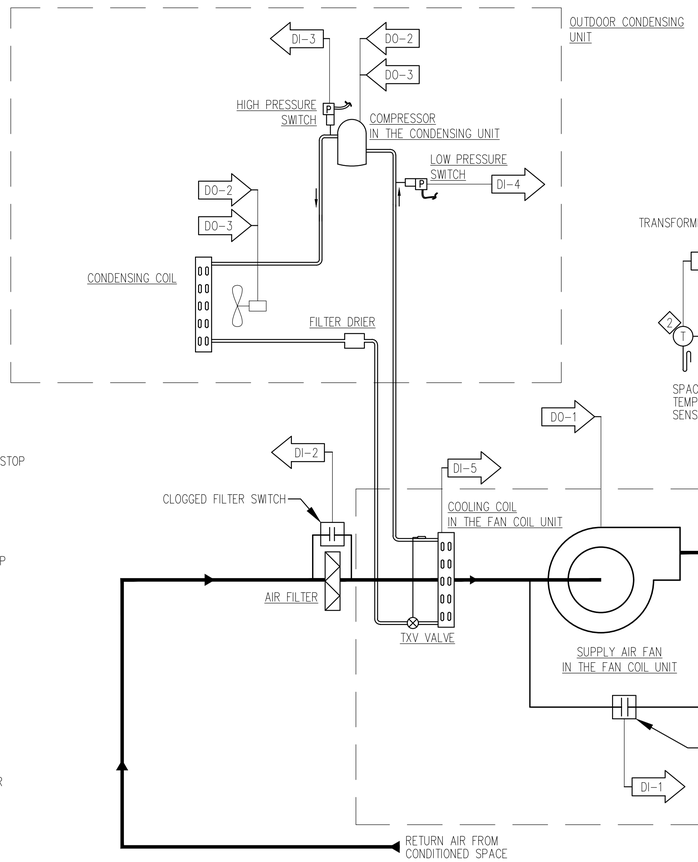

GENERAL NOTES:

- SEE CONTROL LEGEND AND SPECIFICATIONS FOR PROPOSED DISTRIBUTION OF WORK BETWEEN TRADES. FINAL DETERMINATION BY CONTRACTOR.
- LINE VOLTAGE WIRING, CONDUIT, & DEVICES TO BE PROVIDED UNDER DIVISION 26.
- LOW VOLTAGE (LESS THAN 50 VOLTS) WIRING, CONDUIT & DEVICES TO BE PROVIDED UNDER DIVISION 26.

KEY NOTES:

1. DEDICATED POWER UNDER DIVISION 26, MAYBE POWERED THRU UNIT IF POSSIBLE.
2. POWER TO THE DEVICE SHALL BE PROVIDED BY CONTROL CONTRACTOR.
3. PROVIDE ALL SAFETY CONTROLS REQUIRED PER CMC & CAC TITLE 24 CURRENT EDITIONS
4. THE POINTS AND FUNCTIONS IN THIS DIAGRAM ARE PROVIDED AS A REFERENCE ONLY. POINTS AND FUNCTIONS PROVIDED BY THE MANUFACTURER ON FACTORY INSTALLED CONTROLLERS AS A STANDARD WILL BE CONSIDERED SUFFICIENT. PROGRAMMABLE CONTROLLER CAPABLE OF STAND ALONE OPERATION WITH MANUFACTURER'S STANDARD SEQUENCE. INPUT DEVICE SHALL BE INTERFACED WITH EMS FOR OP/START/STOP REMOTE SET POINT CONTROLS ALARM PROCESSING AND SERVICE SCHEDULING.

CONTROLS AND INSTRUMENTATION FOR SPLIT SYSTEM FAN COIL UNIT W/ COOLING ONLY CONDENSING UNIT (FC-2/1,FC-2/2)) — SCALE NONE — 1

BUREAU OF ENGINEERING — OFFICIAL RECORD

BUREAU OF ENGINEERING — ENGINEERING — CITY OF LOS ANGELES

NO.	REVISION DESCRIPTION	DATE	BY
INDEX			BUILDING -

RP-300106

REGISTERED PROFESSIONAL ENGINEER — JAMES H. SHWE — No. 26903 — Renewal: 9/30/20 — MECHANICAL — STATE OF CALIFORNIA

DEPARTMENT OF PUBLIC WORKS — CITY OF LOS ANGELES

TED ALLEN, PE

		DATE
ARCHITECTURAL		26.APR.19
ARCHITECT/ENGINEER : JAMES H SHWE	LIC. NO.: M 26903	26.APR.19
DESIGNED BY:	J.S	26.APR.19
DRAWN BY:	S.W.L	26.APR.19
CHECKED BY:	J.SIN.W	26.APR.19
APPROVED BY:	MAHMOOD KARIMZADEH, AIA, DEPUTY CITY ENGINEER	26.APR.19

CITY OF LOS ANGELES

VERTICAL CONTROL:
HORIZONTAL:

SHEET: CONTROLS FOR COMM. RM & ELEC RM
PROJECT: STUDIO CITY GYMNASIUM
ADDRESS: 12621 RYE STREET, STUDIO CITY, CA 91604

WORK ORDER: E170267B
PLAN FILE
DRAWING: M504
SHEET 159 OF SHEET 211

Project Status
PROJECT ISSUE DATE: Project Issue Date

TTLB TEMPLATE REVISION DATE:
SHEET ISSUE DATE:
FILE PATH:
REVISION DATES (DESIGN STAGE)

THE CITY OF LOS ANGELES OR ITS OFFICERS OR AGENTS SHALL NOT BE RESPONSIBLE FOR THE ACCURACY OR COMPLETENESS OF ELECTRONIC COPIES OF THIS SHEET.

THE CITY OF LOS ANGELES OR ITS OFFICERS OR AGENTS SHALL NOT BE RESPONSIBLE FOR THE ACCURACY OR COMPLETENESS OF ELECTRONIC COPIES OF THIS PLAN

TTLB TEMPLATE REVISION DATE:
SHEET ISSUE DATE:
FILE PATH:
REVISION DATES (DESIGN STAGE)

THE CITY OF LOS ANGELES
DEPARTMENT OF PUBLIC WORKS
BUREAU OF ENGINEERING
ENGINEERING
CITY OF LOS ANGELES

NO.	REVISION DESCRIPTION	DATE	BY

INDEX
BUILDING -
RP-300106

REGISTERED PROFESSIONAL ENGINEER
JAMES H. SHWE
No. 26903
Renewal: 9/30/20
MECHANICAL
STATE OF CALIFORNIA

CITY

	DATE
	26.APR.19
	26.APR.19
	26.APR.19
	26.APR.19
	26.APR.19

ARCHITECTURAL
TED ALLEN, PE
ARCHITECT/ENGINEER : JAMES H SHWE LIC. NO. M 26903
DESIGNED BY: JS
DRAWN BY: S.W.L
CHECKED BY: J.S/N.W
APPROVED BY: MAHMOOD KARIMZADEH, AIA, DEPUTY CITY ENGINEER

CONTROLS FOR FANS & NATURAL VENTILATION SYSTEM
PROJECT STUDIO CITY GYMNASIUM
ADDRESS 12621 RYE STREET, STUDIO CITY, CA 91604

VERTICAL CONTROL:
HORIZONTAL:

Project Status
PROJECT ISSUE DATE: Project Issue Date

WORK ORDER
E170267B
PLAN FILE
DRAWING
M505
SHEET 160 OF SHEET 211

16007-STUDIO CITY-REC CENTER\R07-29-2019

D1000 Electrical Diagram - Complete Schematic

LINE VOLTAGE WIRING, CONDUIT, & DEVICES TO BE PROVIDED UNDER DIVISION 26.

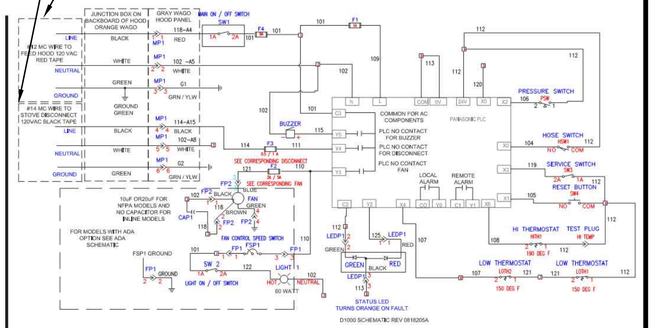

DENLAR KITCHEN HOOD WIRING DIAGRAM

SCALE NONE — 3

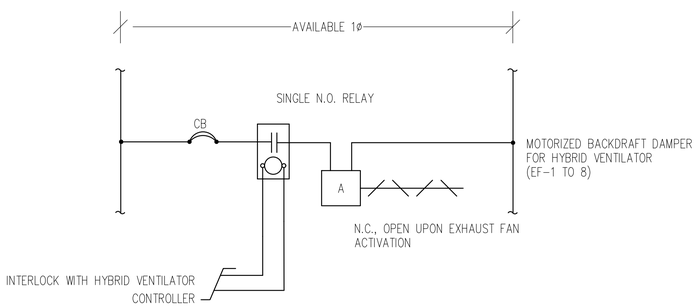

MOTORIZED BACKDRAFT DAMPER CONTROL WIRING DIAGRAM

SCALE NONE — 4

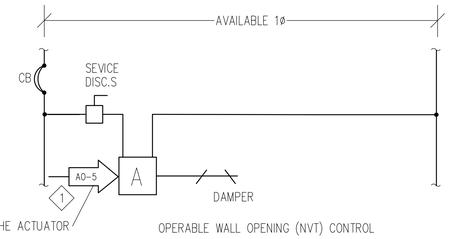

KEY NOTE:

◇1 2 POSITION FOR KITCHEN W/DIGITAL INPUT

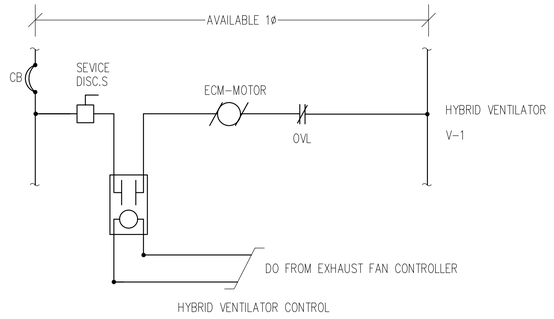

NOTES:

- SEE CONTROL LEGEND FOR DISTRIBUTION OF WORK BETWEEN TRADES.
- LABEL ALL OUTPUTS.
- WITH BATTERY BACKUP, HOLIDAY PROGRAMMING & AUTO CHANGEOVER FOR DAYLIGHT SAVING
- LINE VOLTAGE WIRING, CONDUIT & DEVICES TO BE PROVIDED UNDER DIVISION 26.
- LOW VOLTAGE (LESS THAN 50 VOLTS) WIRING, CONDUIT & DEVICES TO BE PROVIDED UNDER DIVISION 23.

SEQUENCE OF OPERATION:

- IF OUTDOOR TEMPERATURE IS BELOW INDOOR SET POINT AND INDOOR TEMPERATURE IS ABOVE INDOOR COOLING SET POINT, HYBRID VENTILATOR MOTOR SHALL BE ACTIVATED.
- WHEN OUTDOOR TEMPERATURE IS LESS THAN INDOOR COOLING SET POINT, THE NVT SHALL BE FULLY OPEN.
- IF OUTDOOR TEMPERATURE IS BELOW INDOOR SET POINT AND INDOOR TEMPERATURE IS BELOW INDOOR COOLING SET POINT AND NVT FULLY CLOSED, HYBRID VENTILATOR MOTOR SHALL BE DEACTIVATED.
- WHEN OUTDOOR TEMPERATURE IS LESS THAN SPACE INDOOR HEATING SET POINT AND SPACE TEMPERATURE IS BELOW INDOOR HEATING SET POINT, THENVT SHALL BE MODULATED TO A MORE CLOSED POSITION TO MAINTAIN SPACE TEMPERATURE AT SET POINT.
- WHEN OUTDOOR TEMPERATURE IS HIGHER THAN INDOOR COOLING SET POINT, THE NVT SHALL BE FULLY CLOSED AND VENTILATION SHALL BE ACHIEVED THROUGH THE AIR HANDLING UNIT OA INTAKE WITH DCV.
- IF SPACE CO2 LEVELS GET LOWER THAN SET POINT, CLOSE NVT FULLY AND ACTIVATE AIR HANDLING UNIT TO GET OA THROUGH UNIT DAMPERS CONTROLLED BY DCV.

HYBRID VENTILATOR & OPERABLE WALL OPEINING (NVT) CONTROLS

SCALE NONE — 1

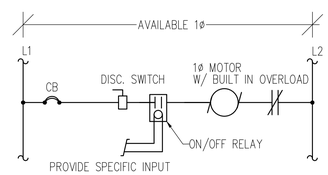

TYPICAL 1ø MOTOR CONTROL LADDER DIAGRAM

TYPICAL FAN MOTOR CONTROLS

SCALE NONE — 2

BUREAU OF ENGINEERING OFFICIAL RECORD

Model: D1036-I--DF
Spec & Submittal
Version 2.3

The D1000

9

GENERAL NOTES:

- SEE CONTROL LEGEND FOR DISTRIBUTION OF WORK BETWEEN TRADES.
- LINE VOLTAGE WIRING, CONDUIT & DEVICES TO BE PROVIDED UNDER DIVISION 26.
- LOW VOLTAGE (LESS THAN 50 VOLTS) WIRING, CONDUIT & DEVICES TO BE PROVIDED UNDER DIVISION 23.

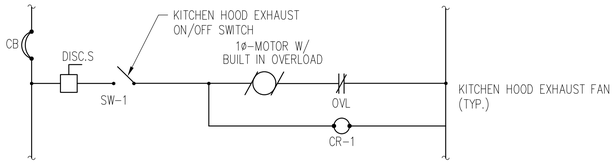

SEQUENCE OF OPERATION

1. IF KITCHEN HOOD KH-1 OR KH-2 EXHAUST FANS MANUALLY ACTIVATED THRU SW-1 & CR-1, IT ACTIVATE OPEN OPERABLE WALL OPENING (NVT) 100%.
2. IF KITCHEN HOOD FIRE SUPPRESSION SYSTEM IS ACTIVATED, FC-2/3 SHALL BE SHUT DOWN AND KITCHEN HOOD EXHAUST FANS SHALL STAY ON.
3. WHEN FC-2/3 IS ACTIVATED BY EMS OR MANUAL OVERRIDE, THERMOSTAT DETERMINES HEATING & COOLING TO ROOM TEMPERATURE SET POINT, 78° F FOR COOLING, 72° F FOR HEATING.
4. WIRING DIAGRAMS ARE PROVIDED FOR REFERENCE ONLY. ALTERNATE METHODS RESULTING IN THE SAME SEQUENCE OF OPERATION ARE ACCEPTABLE.

KITCHEN AIR BALANCE SCHEDULE

ROOM NAME	CFM PROVIDED		
	SUPPLY	RETURN	TOTAL EXHAUST
KITCHEN 201 (KH-1 EXHAUST FANS ON)	500	0	500
KITCHEN 201 (KH-1 EXHAUST FANS OFF)	0	0	0
KITCHEN 201 (KH-2 EXHAUST FANS ON)	500	0	500
KITCHEN 201 (KH-2 EXHAUST FANS OFF)	0	0	0
KITCHEN 201 (KH-1 & KH-2 EXHAUST FANS ON)	1000	0	1000
KITCHEN 201 (KH-1 & KH-2 EXHAUST FANS OFF)	0	0	0

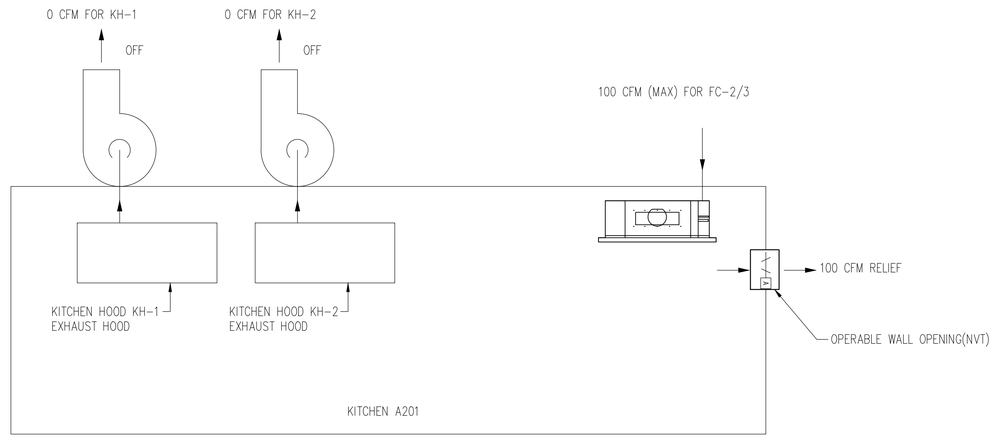

KITCHEN AIR BALANCE WHEN KITCHEN HOOD(KH-1 AND KH-2) EXHAUST FANS OFF

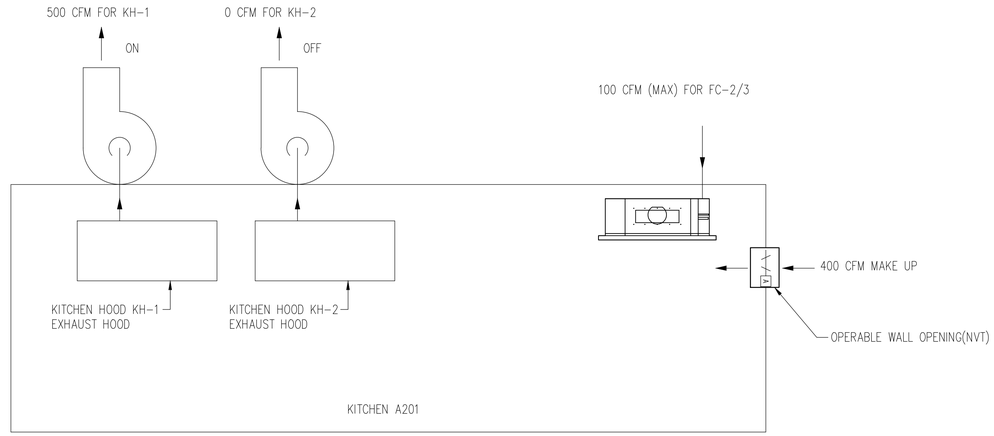

KITCHEN AIR BALANCE WHEN KITCHEN HOOD(KH-1 OR KH-2) EXHAUST FAN ON

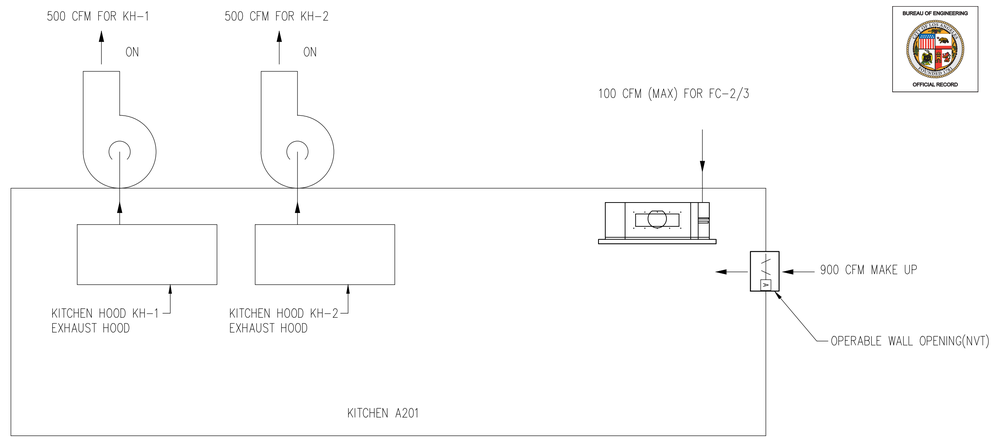

KITCHEN AIR BALANCE WHEN KITCHEN HOOD(KH-1 & KH-2) EXHAUST FANS ON

BUREAU OF ENGINEERING
OFFICIAL RECORD

TYPICAL FAN MOTOR CONTROLS

SCALE NONE

1

BUREAU OF ENGINEERING
ENGINEERING
CITY OF LOS ANGELES

NO.	REVISION DESCRIPTION	DATE	BY

BUILDING -

INDEX **RP-300106**

REGISTERED PROFESSIONAL ENGINEER
JAMES H. SHWE
No. 26903
Renewal: 9/30/20
MECHANICAL
STATE OF CALIFORNIA

DEPARTMENT OF PUBLIC WORKS
CITY OF LOS ANGELES

TED ALLEN, PE

	CITY
DATE	26.APR.19
ARCHITECTURAL	LIC. NO.: M 26903
ARCHITECT/ENGINEER : JAMES H SHWE	
DESIGNED BY:	JS
DRAWN BY:	S.W.L
CHECKED BY:	J.S/N.W
APPROVED BY:	MAHMOOD KARIMZADEH, AIA, DEPUTY CITY ENGINEER

VERTICAL CONTROL:
HORIZONTAL

SHEET CONTROLS

PROJECT STUDIO CITY GYMNASIUM

ADDRESS 12621 RYE STREET, STUDIO CITY, CA 91604

WORK ORDER E170267B

PLAN FILE

DRAWING **M506**

SHEET 161 OF SHEET 211

Project Status
PROJECT ISSUE DATE: Project Issue Date

16007/STUDIO CITY-REC CENTER/07-29-2019

THE CITY OF LOS ANGELES OR ITS OFFICERS OR AGENTS SHALL NOT BE RESPONSIBLE FOR THE ACCURACY OR COMPLETENESS OF ELECTRONIC COPIES OF THIS PLAN

TTLB TEMPLATE REVISION DATE:
SHEET ISSUE DATE:
FILE PATH:

REVISION DATES (DESIGN STAGE)

SEQUENCE OF OPERATION

FUNCTION	INPUT	CONDITION	ACTION	REMARK
ENABLE	EMS			
ON	EMS	OWNER SCHEDULE OR MANUAL OVERRIDE	ON	
OFF	EMS	OWNER SCHEDULE OR MANUAL OVERRIDE	OFF	
COOLING	SPACE AIR TEMP. SENSOR	IF SPACE AIR TEMP. > SET PT (75°F DEFAULT),	SUPPLY FAN ON, ENABLE COMPRESSOR AND CONDENSER TO MODULATE AND CYCLE ON AND OFF	
HEATING	SPACE AIR TEMP. SENSOR	IF SPACE AIR TEMP. < SET PT (70°F DEFAULT)	SUPPLY FAN ON, ENABLE COMPRESSOR AND CONDENSER TO MODULATE AND CYCLE ON AND OFF	
UNOCCUPIED MODE	OCCUPANCY SENSOR	IF SPACE IS UNOCCUPIED PER MANUFACTURER RECOMMENDED TIME.	A/C UNIT TO SHUT DOWN.	VERIFY W/ MANUFACTURER FOR RECOMMENDED TIME DELAY.
FIRE	TOTAL COVERAGE SMOKE DETECTION SYSTEM	SMOKE DETECTION	A/C UNIT AND ALL ASSOCIATED FANS (SUPPLY) OFF.	
SAFETY	EMS	INOPERATION OF ANY FAN OR COMPRESSOR, LOW EVAPORATOR PRESSURE, HIGH CONDENSER PRESSURE, FREEZESTAT, HIGH CONDENSATE LEVEL SWITCH	SHUT DOWN AND ALARM	
MAINTENANCE	EMS	CLOGGED FILTER	ALARM	
		MANUFACTURER REQUIRED OR RECOMMENDED ALARMS	ALARM	
		MANUFACTURER RECOMMENDED SCHEDULE	REMIND MAINTENANCE PERSON & RECORD COMPLETION.	

NOTES:

* SUFFICIENT TIME DELAY SHALL BE PROVIDED BETWEEN EACH CONTROL STEP TO PREVENT RAPID CYCLING OF EQUIPMENT.

SEQUENCE OF OPERATION — SCALE NONE — 3

KEY NOTES:

1. UNIT CONTROLLER IS POWERED THRU UNIT.
2. PROVIDE ALL SAFETY CONTROLS REQUIRED PER CMC & CAC TITLE 24 CURRENT EDITIONS

GENERAL NOTES:

- SEE CONTROL LEGEND AND SPECIFICATIONS FOR PROPOSED DISTRIBUTION OF WORK BETWEEN TRADES. FINAL DETERMINATION BY CONTRACTOR.
- LINE VOLTAGE WIRING, CONDUIT & DEVICES TO BE PROVIDED UNDER DIVISION 26.
- LOW VOLTAGE (LESS THAN 50 VOLTS) WIRING, & DEVICES TO BE PROVIDED UNDER DIVISION 23. SEE ELECTRICAL DWG. FOR LOW VOLTAGE CONDUIT PATH.

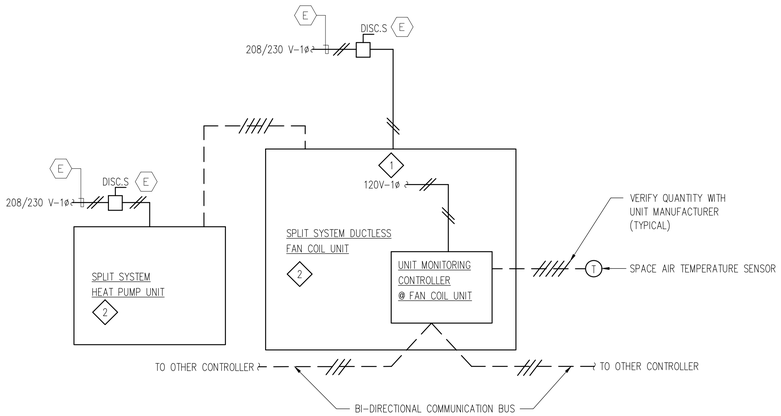

CONTROLS AND POWER WIRING SCHEMATIC — SCALE NONE — 2

GENERAL NOTES:

- SEE CONTROL LEGEND AND SPECIFICATIONS FOR PROPOSED DISTRIBUTION OF WORK BETWEEN TRADES. FINAL DETERMINATION BY CONTRACTOR.
- LINE VOLTAGE WIRING, CONDUIT & DEVICES TO BE PROVIDED UNDER DIVISION 26.
- LOW VOLTAGE (LESS THAN 50 VOLTS) WIRING, & DEVICES TO BE PROVIDED UNDER DIVISION 23. SEE ELECTRICAL DWG. FOR LOW VOLTAGE CONDUIT PATH.

KEY NOTES:

1. UNIT CONTROLLER IS POWERED THRU UNIT.
2. POWER TO THE DEVICE SHALL BE PROVIDED BY CONTROL CONTRACTOR.
3. PROVIDE ALL SAFETY CONTROLS REQUIRED PER CMC & CAC TITLE 24 CURRENT EDITIONS.
4. PROGRAMMABLE CONTROLLER CAPABLE OF STAND ALONE OPERATION WITH MANUFACTURER'S STANDARD SEQUENCE. INPUT DEVICE SHALL BE INTERFACED WITH EMS FOR OP/START/STOP REMOTE SET POINT CONTROLS ALARM PROCESSING AND SERVICE SCHEDULING.

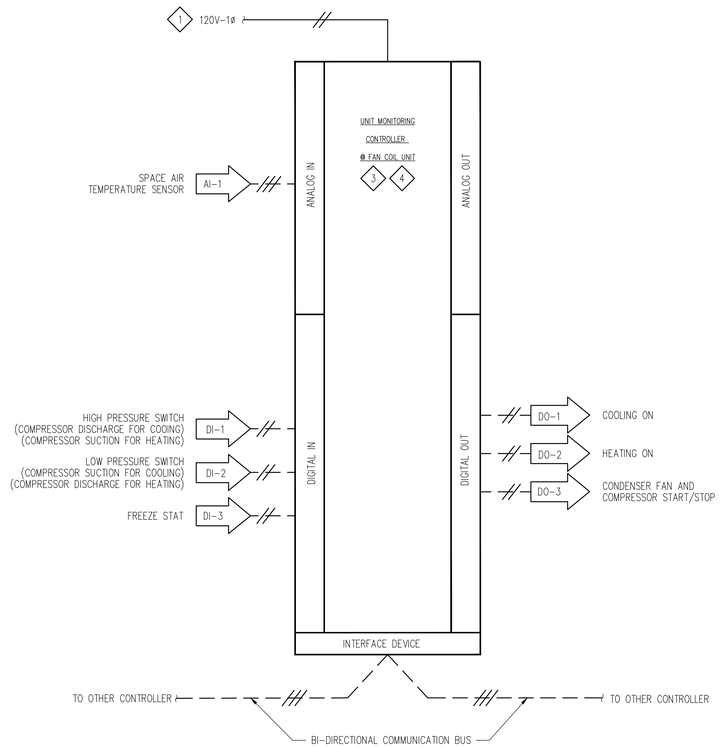

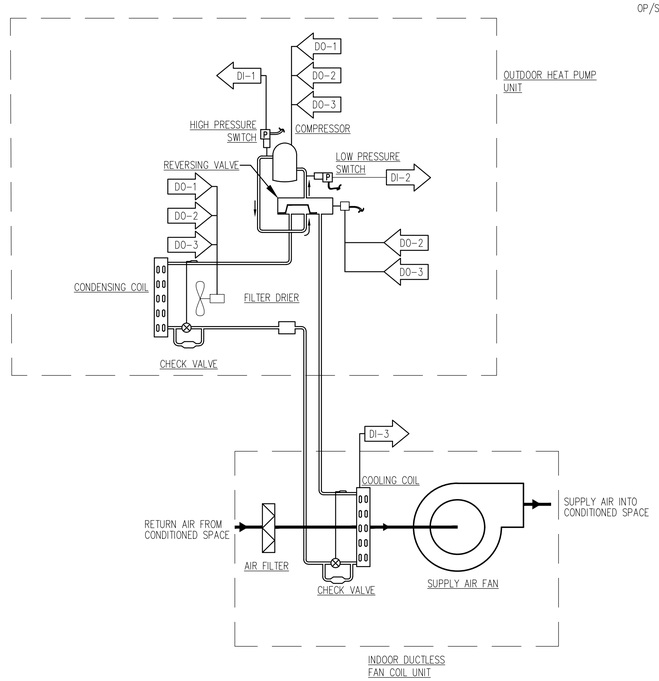

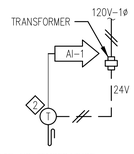

CONTROLS AND INSTRUMENTATION FOR SPLIT SYSTEM FAN COIL UNIT W/ HEAT PUMP UNIT — SCALE NONE — 1

BUREAU OF ENGINEERING

ENGINEERING — CITY OF LOS ANGELES

NO.	REVISION DESCRIPTION	DATE	BY
	INDEX		

BUILDING - RP-300106

REGISTERED PROFESSIONAL ENGINEER — JAMES H. SHIVE — No. 26903 — Renewal: 9/30/20 — MECHANICAL — STATE OF CALIFORNIA

DEPARTMENT OF PUBLIC WORKS

CITY OF LOS ANGELES

	CITY	DATE	BY
		26.APR.19	
		26.APR.19	
		26.APR.19	
		26.APR.19	
	ENGINEER	26.APR.19	

TED ALLEN, PE

ARCHITECTURAL

ARCHITECT/ENGINEER : JAMES H SHIVE — LIC. NO.: M 26903

DESIGNED BY: J.S

DRAWN BY: S.W.L

CHECKED BY: J.S/N.W

APPROVED BY: MAHMOOD KARIMZADEH, AIA, DEPUTY CITY ENGINEER

VERTICAL CONTROL:

HORIZONTAL:

SHEET: CONTROLS

PROJECT: STUDIO CITY GYMNASIUM

ADDRESS: 12621 RYE STREET, STUDIO CITY, CA 91604

BUREAU OF ENGINEERING — OFFICIAL RECORD

WORK ORDER E170267B

PLAN FILE

DRAWING M507

SHEET 162 OF SHEET 211

16007/STUDIO CITY REC CENTER/07-29-2019

Project Status

PROJECT ISSUE DATE: Project Issue Date

TTLB TEMPLATE REVISION DATE:

SHEET ISSUE DATE:

REVISION DATES (DESIGN STAGE)

FILE PATH:

THE CITY OF LOS ANGELES OR ITS OFFICERS OR AGENTS SHALL NOT BE RESPONSIBLE FOR THE ACCURACY OR COMPLETENESS OF ELECTRONIC COPIES OF THIS PLAN SHEET.

UTILITY SCHEDULE

		FIXTURE UNITS	G.P.M.	OTHER (G.P.M.)	TOTAL (G.P.M.)	METER SIZE(INCH)	PRESSURE (P.S.I.)	HARDNESS (GR/GAL)
COLD WATER	NEW WORK	95	66	10	76	3	121–195	

		FIXTURE UNITS	DRAIN(INCH)	BUILDING SEWER(INCH)	ON-SITE SEWER(INCH)	PUBLIC SEWER(INCH)
SEWER	NEW WORK	92	3 (4")	SEE CIVIL DRAWING C400	SEE CIVIL DRAWING C400	SEE CIVIL DRAWING C400

DOMESTIC WATER DESIGN REQUIREMENTS

			DOMESTIC WATER
A. PRESSURE AVAILABLE	MAX./MIN.		195–121 PSI
B. TOTAL FIXTURE UNITS:	NEW		95 F.U.
C. TOTAL WATER DEMAND:		DOMESTIC	66 GPM
	⟨1⟩	IRRIGATION	– GPM
		MISC.	10 GPM
		FUTURE	– GPM
		TOTAL	76 GPM

	DOMESTIC WATER
D. RESIDUAL PRESSURE REQUIRED AT REMOTE OUTLET:	25 PSI
E. PRESSURE LOSS DUE TO HEIGHT 20 FT x 0.433	8.66 PSI
F. PRESSURE LOSS THRU 3" METER @ 110 GPM	1.70 PSI
G. PRESSURE LOSS THRU 3" PRESSURE REDUCING VALVE @ 110 GPM	6.00 PSI
H. OTHER PRESSURE LOSSES (REDUCED BACK FLOW)	12.00 PSI
I. TOTAL PRESSURE LOSS	53.36 PSI
J. AVAILABLE PRESSURE	70.00 PSI
K. PRESSURE AVAILABLE FOR FRICTION LOSS	16.64 PSI

L. DEVELOPED PIPE LENGTH: BUILDING TO LAST FIXTURE	350	FT
+ 25 % FOR FITTINGS	87.50	FT
TOTAL DEVELOPED LENGTH	437.50	FT
M. ALLOWABLE FRICTION LOSS PER 100' OF PIPE [100'x (K) 16.64/ (L) 437.00]	3.8	PSI/100'

COLD WATER PIPE SIZES BASED ON TYPE "L" COPPER @ 3.6 PSI/100' & 8 FPS MAX.

PIPE SIZE	F.T.	F.U.	F.V. F.U.	PIPE SIZE	F.T.	F.U.	F.V. F.U.	PIPE SIZE	F.T.	F.U.	F.V. F.U.
1/2"	1	–		1 1/2"	54	13		4"	1668	1668	
3/4"	6	–		2"	185	82					
1"	13	–		2 1/2"	431	295					
1 1/4"	28	–		3"	719	666					

HOT WATER PIPE SIZES BASED ON TYPE "L" COPPER @ 3.6 PSI/100' & 5 FPS MAX.

PIPE SIZE	F.T.	F.U.	F.V. F.U.	PIPE SIZE	F.T.	F.U.	F.V. F.U.	PIPE SIZE	F.T.	F.U.	F.V. F.U.
1/2"	1	–		1 1/2"	46	–		4"	840	–	
3/4"	6	–		2"	119	–					
1"	13	–		2 1/2"	245	–					
1 1/4"	28	–		3"	406	–					

⟨1⟩ PROVIDE SEPARATE METER

PLUMBING MATERIALS

1. WATER PIPING: TYPE "L" COPPER WITH WROUGHT COPPER FITTINGS, WITH LEAD FREE SOLDER.
2. WASTE AND VENT PIPING: SERVICE WEIGHT CAST IRON PIPE WITH STAINLESS STEEL ON-HUB COUPLINGS. VENT PIPING 2" AND SMALLER MAY BE SCHEDULE 40 GALVANIZED STEEL WITH THREADED FITTINGS.
3. GAS PIPING: SCHEDULE 40 BLACK STEEL WITH 150 POUND MALLEABLE IRON SCREWED FITTINGS FOR 2½" AND SMALLER. SCHEDULE 40 BLACK STEEL WITH WELDED FITTINGS FOR 3" AND LARGER.
4. CONDENSATE DRAIN PIPING: TYPE "M" COPPER WITH WROUGHT COPPER FITTINGS.

GENERAL NOTES

1. FOR EXACT LOCATION AND HEIGHT OF PLUMBING FIXTURES SEE ARCHITECTURAL PLANS AND ELEVATIONS.
2. COMPLY WITH ALL APPLICABLE CODES, PERTINENT REGULATIONS OF ALL AGENCIES HAVING JURISDICTION.
3. SEE CONTRACT SPECIFICATIONS FOR INSTALLATION, MATERIALS, TESTING, CLEANING AND MISCELLANEOUS GENERAL REQUIREMENTS.
4. CONTRACTOR TO COORDINATE ALL WORK WITH OTHER TRADES PRIOR INSTALLATION OF PIPING AND EQUIPMENT.
5. PENETRATIONS THROUGH RATED WALLS AND FLOORS TO BE SEALED WITH MATERIAL CAPABLE OF WITHSTANDING FLAMES AND HOT GASES WHEN SUBJECTED TO THE TESTING STANDARD REQUIREMENT ASTM-E-814 FOR FIRE STOPS.
6. INSTALL CLEAN OUTS AS REQUIRED BY THE 2001 UPC SECTION 707.0 AND 719.0
7. ALL BURRED ENDS OF DOMESTIC WATER PIPING AND TUBING SHALL BE REAMED TO THE FULL BORE OF THE PIPE OR TUBE AND ALL CHIPS SHALL BE REMOVED. TOOLS USED TO CUT OR REAM PIPE SHALL BE KEPT FREE OF OIL OR GREASE AND WHERE SUCH CONTAMINATION HAS OCCURRED THE ITEMS AFFECTED SHALL BE REWORKED AND RINSED.
8. ALL UTILITIES TO TERMINATE 5'-0" FROM BUILDING LINE. FOR CONTINUATION SEE CIVIL DRAWINGS.
9. STORM & OVERFLOW DRAIN PIPE SIZES BASED ON RAINFALL OF 2" PER HOUR.
10. NO CONCEALED SLIP JOINT CONNECTIONS WILL BE PERMITTED AT FIXTURES.
11. PIPE INSTALLED PIERCES OR SWEEPS DOWN THROUGH CONCRETE FOOTING SHALL BE DOUBLE WRAPPED WITH 1/8 THICK SHEET CLOSED CELL POLYETHYLENE.
12. FURNISH & INSTALL MANUFACTURED WATER HAMMER ARRESTOR AT ALL QUICK-CLOSING VALVES, OUTLETS AND DEVICES.
13. ANY DEVIATION FROM DWGS. THAT REQUIRE PENETRATION THROUGH SHEAR WALL SHALL BE SUBMITTED TO THE ARCHITECT FOR REVIEW. THE ADDITIONAL COST OF ANY REINFORCEMENT TO THE SHEAR WALLS AS A RESULT OF DEVIATIONS FROM THE PLUMBING DWGS. SHALL BE AT THE CONTRACTOR'S EXPENSE.
14. HEIGHT OF FIXTURE SHALL BE VERIFIED WITH ARCHITECT, THRU PROJECT MANAGER, PRIOR TO INSTALLATION.
15. PLUMBING MATERIAL AND INSTALLATION SHALL BE ACCORDANCE WITH TITLE 24, CAC PART 5 2016, CALIFORNIA PLUMBING CODE.
16. HOSE BIBB SHALL BE PROVIDED WITH VACUUM BREAKER AND SHUTOFF VALVES.
17. TRAP PRIMERS SERVING MORE THAN ONE FIXTURE SHALL BE PROVIDE WITH A DISTRIBUTION UNIT AND A SEPARATED LINE SHALL BE PROVIDED TO EACH FIXTURE FROM THE TRAP PRIMER.
18. ALL VALVES, TRAP PRIMER, WATER HAMMER ARRESTOR AND COCKS SHALL BE LOCATED TO BE READILY ACCESSIBLE. WHERE VALVES ARE INSTALLED WITHIN, OR BEHIND WALLS, PARTITIONS OR CEILINGS OR CEILINGS, AN ACCESS PANEL SHALL BE INSTALLED.
19. COORDINATE WITH ARCHITECTURAL DRAWINGS FOR WALL AND PARTITION CONSTRUCTION AND THICKNESS WHERE PLUMBING PIPING OR EQUIPMENT IS INDICATED.
20. ALL EXISTING STORM DRAIN LINES SHALL BE CLEANED FOR PROPER FUNCTION.
21. REPLACE ALL EXISTING CLEAN OUT COVER AND CAP.
22. ALL SHUT OFF VALVE (SOV) INSIDE THE BUILDING SHOULD BE BALL VALVE.
23. BEFORE BEGINNING ANY WORK, CONTRACTOR SHALL THOROUGHLY EXAMINE (VERIFY) ALL EXISTING CONDITIONS, POINTS OF CONNECTIONS, SIZES, LOCATION AND AVAILABILITY OF EXISTING UTILITIES.
24. CONTRACTOR SHALL PROVIDE FINAL CONNECTIONS FOR ALL EQUIPMENT AND FIXTURES, INCLUDING TRAPS, TRIM, SHUTOFF VALVES, STOPS, APPROVED BACK FLOW PREVENTERS.
25. COORDINATE AND VERIFY EXACT LOCATION, SIZE, POINTS OF CONNECTION AND INVERT ELEVATIONS OF UTILITY SERVICE PIPING BEFORE TRENCHING OR INSTALLATION.
26. THE LOCATION AND ELEVATION OF ALL PLUMBING PIPING SHALL BE VERIFIED AND COORDINATED WITH ALL OTHER TRADES, STRUCTURAL CONDITIONS AND BUILDING CONSTRUCTION, PRIOR TO START OF INSTALLATION.
27. ALL PLUMBING FIXTURES SHALL MEET THE FLOW REQUIREMENTS SPECIFIED IN THE LOS ANGELES PLUMBING CODE (LAPC 401.3)
28. a. ALL FIXTURES, EQUIPMENT, PIPING, AND MATERIALS SHALL BE LISTED.
    b. ALL FAUCETS IN PUBLIC RESTROOMS SHALL BE SELF-CLOSING OR SELF-CLOSING METERING FAUCETS.
    c. PUBLIC LAVATORIES SHALL HAVE CONTROLS TO LIMIT THE WATER TEMPERATURE TO 110°F.
    d. WATER PIPE AND FITTINGS WITH A LEAD CONTENT WHICH EXCEEDS 0.25% SHALL BE PROHIBITED IN SYSTEMS CONVEYING POTABLE WATER.
    e. SHOWERS SHALL BE INSTALLED WITH INDIVIDUAL TEMPERING VALVES.

PLUMBING SHEET INDEX

	SHEET NO.	SHEET DESCRIPTION
1	P001	LEGEND, GENERAL NOTES AND SHEET INDEX
2	P002	SCHEDULES
3	P003	SCHEDULES
4	PS010	PLUMBING SITE PLAN
5	P100	FLOOR PLAN
6	P103	ROOF PLAN
7	P401	ENLARGED FLOOR PLANS
8	P402	ENLARGED FLOOR PLANS
9	P403	ENLARGED FLOOR PLANS
10	P501A	COLD AND HOT WATER RISER DIAGRAMS–PART A
11	P501B	COLD AND HOT WATER RISER DIAGRAMS–PART B
12	P502	WASTE AND VENT RISER DIAGRAMS
13	P601	DETAILS

PLUMBING LEGEND

ALL ITEMS INDICATED IN THIS LEGEND NOT NECESSARILY USED ON THE DRAWINGS

SYMBOL	ABBREVIATION	DESCRIPTION
		RELIEF VALVE
	TP	TRAP PRIMER
		THERMOMETER
		STRAINER
	G.V./ S.O.V.	GATE VALVE / SHUTOFF VALVE
	C.V.	CHECK VALVE
	B.V.	BALANCING VALVE / GLOBE VALVE
	U.	UNION
	W.H.A.	WATER HAMMER ARRESTOR
	W/S	WASTE OR SOIL ABOVE FLOOR
	W/S	WASTE OR SOIL BELOW FLOOR OR GRADE
	F.C.O.	FLOOR CLEANOUT
	Y.C.O.	YARD CLEANOUT
	W.C.O.	WALL CLEANOUT
SD	SD	STORM DRAIN ABOVE FLOOR
OD	OD	OVERFLOW DRAIN ABOVE FLOOR
	CW	DOMESTIC COLD WATER
	HW	DOMESTIC HOT WATER
	HWR	DOMESTIC HOT WATER RETURN
	V	VENT
G	G	GAS (8" WATER COLUMN)
RW	RW	RECLAIMED WATER
MPG	MPG	MEDIUM PRESSURE GAS (5#)
CD	CD	CONDENSATE DRAIN
		EQUIPMENT DESIGNATION
		DETAIL REFERENCE
	P.O.C.	POINT OF CONNECTION
		DIRECTION OF FLOW
E__	E__	EXISTING PIPING (CW, TW, HW, HWR, V etc.)
EW	EW	EXISTING WASTE
	ABV.	ABOVE
	ADA	AMERICANS WITH DISABILITIES ACT COMPLIANCE
	A.P.	ACCESS PANEL
	BEL.	BELOW
	CFH	CUBIC FEET PER HOUR
	CONT.	CONTINUATION
	DN.	DOWN
	DWG.	DRAWING
	(E)	EXISTING
	EQUIP.	EQUIPMENT
	FLR.	FLOOR
	F.T.	FLUSH TANK
	F.U.	FIXTURE UNIT
	F.V.	FLUSH VALVE
	G.P.F.	GALLONS PER FLUSH
	I.E.	INVERT ELEVATION
	MECH.	MECHANICAL
	MTD.	MOUNTED
	N.I.C.	NOT IN CONTRACT
	PSIG	POUNDS PER SQUARE INCH GAUGE
	R.I. & C.	ROUGH-IN AND CONNECT
	RM.	ROOM
	SHT.	SHEET
	SQ.FT., (SF)	SQUARE FEET
	TYP.	TYPICAL
	U.O.S.	UNDER OTHER SECTION
	V.B.	VACUUM BREAKER
	V.B.F.	VENT BELOW FLOOR
	V.T.R.	VENT THRU ROOF
	W.C.	WATER COLUMN
	B.F.P.	BACK FLOW PREVENTER
		EXIST PLUMBING TO BE REMOVED

BUREAU OF ENGINEERING
OFFICIAL RECORD

Project Status
PROJECT ISSUE DATE: Project Issue Date

DEPARTMENT OF PUBLIC WORKS
BUREAU OF ENGINEERING
ENGINEERING
CITY OF LOS ANGELES

NO.	REVISION DESCRIPTION	DATE	BY
INDEX			

BUILDING - RP-300106

REGISTERED PROFESSIONAL ENGINEER
JAMES H. SHWE
No. 26903
Renewal: 9/30/20
MECHANICAL
STATE OF CALIFORNIA

CITY OF LOS ANGELES
DEPARTMENT OF PUBLIC WORKS
BUREAU OF ENGINEERING

TED ALLEN, PE
CITY ENGINEER

CITY	DATE	26.APR.19	26.APR.19	26.APR.19	26.APR.19
ARCHITECTURAL	ARCHITECT/ENGINEER : JAMES H SHWE	LIC. NO.: M 26903			
DESIGNED BY:	JS				
DRAWN BY:	SC, RN				
CHECKED BY:	JS				
APPROVED BY:	MAHMOOD KARIMZADEH, AIA, DEPUTY CITY ENGINEER				

VERTICAL CONTROL:
HORIZONTAL:

SHEET: LEGEND, GENERAL NOTES AND SHEET INDEX
PROJECT: STUDIO CITY GYMNASIUM
ADDRESS: 12621 RYE STREET, STUDIO CITY, CA 91604

WORK ORDER
E170267B

PLAN FILE

DRAWING
P001
SHEET 163 OF SHEET 211

16007/STUDIO CITY-REC CENTER/07-29-2019

THE CITY OF LOS ANGELES OR ITS OFFICERS OR AGENTS SHALL NOT BE RESPONSIBLE FOR THE ACCURACY OR COMPLETENESS OF ELECTRONIC COPIES OF THIS PLAN SHEET.

TTLB TEMPLATE REVISION DATE:
SHEET ISSUE DATE:
FILE PATH:

REVISION DATES (DESIGN STAGE)

PLUMBING ROUGH-IN SCHEDULE, CONNECTIONS & SPECIFICATIONS

TAG	SPEC. REF. & SECTION	DESCRIPTION	FIXTURE UNIT		MIN. BRANCH SIZE (INCH)					TRAP SIZE (INCH)	TYPE	APPLICATION	MANUFACTURER & MODEL	SPECIFICATIONS	REMARKS
			W/S	CW	W	V	CW	HW	TW						
WC-1	N/A	WATER CLOSET	6	5	4	2	1-1/2	*	*	INT	WALL HUNG	ADA	ACORN 1675 SERIES OR EQUAL	1. FIXTURE: 14 GAGE, TYPE 304 STAINLESS STEEL. BLOW JET TYPE, ELONGATED BOWL AND SELF-DRAINING FLUSHING RIM, WALL HUNG TOILET. 2. FLUSH VALVE: 1.28 GALLON PER FLUSH, SLOAN MODEL 111-1.28 OR EQUAL & HANDLE ON WIDE SIDE. 3. SEATS: OLSONITE NO. 95SS OR BENEKE NO. 525WHITE SOLID PLASTIC OPEN FRONT SEAT. 4. CARRIER: J.R. SMITH 200 SERIES OR EQUAL BY ZURN. WHERE SPACE DOES NOT PERMIT USE J.R. SMITH 400 SERIES.	SEE ARCH DWG FOR ADA HEIGHTS.
WC-2	N/A	WATER CLOSET	6	5	4	2	1-1/2	*	*	INT	FLOOR MOUNT	ADA	ACORN R2115-T-2-1.28GPF OR EQUAL	1. FIXTURE: 16 GAGE, TYPE 304 STAINLESS STEEL. BLOW JET TYPE, FLOOR MOUNTED, ELONGATED BOWL AND WALL OUTLET TYPE. 2. FLUSH VALVE: 1.28 GALLON PER FLUSH, SLOAN MODEL 111-1.28 OR EQUAL & HANDLE ON WIDE SIDE. 3. SEATS: OLSONITE NO. 95SS OR BENEKE NO. 525WHITE SOLID PLASTIC OPEN FRONT SEAT.	
WC-3	N/A	WATER CLOSET	6	5	4	2	1-1/2	*	*	INT	FLOOR MOUNT	ADA	AMERICAN STANDARD MADERA 2854.111 OR EQUAL ZURN, KOHLER	1. FIXTURE: FLOOR MOUNTED, VITREOUS CHINA, ELONGATED TOILET BOWL, 16-1/2" HEIGHT WITH 1.1 GALLON PER FLUSH FLUSHOMETER TOILET SYSTEM WITH EVERCLEAN. 2. FLUSH VALVE: EXPOSED, BATTERY POWERED, SENSOR-OPERATED TOILET FLUSH VALVE WITH MANUAL OVERRIDE BUTTON, DELIVER 1.1 GALLON PER FLUSH, AMERICAN STANDARD 6065.111 OR EQUAL. 3. SEATS: OLSONITE NO. 95SS OR BENEKE NO. 525WHITE SOLID PLASTIC OPEN FRONT SEAT.	
WC-4	N/A	WATER CLOSET	6	5	4	2	1-1/2	*	*	INT	WALL HUNG	ADA	AMERICAN STANDARD AFWALL 2859.111 OR EQUAL ZURN, KOHLER	1. FIXTURE: WALL MOUNTED, VITREOUS CHINA, ELONGATED TOILET BOWL, WITH 1.1 GALLON PER FLUSH FLUSHOMETER VALVE. 2. FLUSH VALVE: MANUAL FLUSH VALVE, DELIVER 1.1 GALLON PER FLUSH, AMERICAN STANDARD 6047.111.002 OR EQUAL. 3. SEATS: OPEN FRONT FIRE RETARDANT WHITE SEAT, OLSONITE NO. 10SSCTFR OR EQUAL. 4. CARRIER: J.R. SMITH 200 SERIES OR EQUAL BY ZURN. WHERE SPACE DOES NOT PERMIT USE J.R. SMITH 400 SERIES.	SEE ARCH DWG FOR ACC HEIGHTS.
U-1	N/A	URINAL	5	5	2	1-1/2	2	*	*	INT	WALL HUNG	ADA	AMERICAN STANDARD 6590.503 OR EQUAL ZURN, KOHLER	1. FIXTURE: LOW FLUSH URINAL, 1/8 GALLON. WALL HUNG VITREOUS CHINA, FURNISH COMPLETE WITH HANGER BRACKETS, FASTENERS, GASKETS AND 3/4" TOP SPUD. 2. FLUSH VALVE: EXPOSED MANUAL FLUSH VALVE WITH MANUAL HANDLE, 1/8 GALLONS PER FLUSH, MODEL 6045.013	SEE ARCH DWG FOR ACC HEIGHTS.
L-1	N/A	LAVATORY	1	1	2	1-1/2	3/4	3/4	*	1-1/4 x 1-1/2	WALL HUNG	ADA	AMERICAN STANDARD NO. 0355.012, "LUCERNE" OR EQUAL ZURN, KOHLER	1. FIXTURE: VITREOUS CHINA, FOR CONCEALED ARM SUPPORT WITH FAUCET HOLES 4" ON CENTERS, SIZE: 20" X 18". 2. FAUCET: CHICAGO NO. ECAST3400-E39VPABCP, 0.35GPM VANDAL-PROOF, NON-AERATING SPRAY, MVP SELF-CLOSING, AUTO-TIMED METERING CARTRIDGE, ADJUSTABLE RUN TIME FROM 2 TO 15 SECONDS, OPENS WITH PUSH, 0.20 MAX GALLON/CYCLE. 3. DRAIN: KOHLER NO. K-7715 OR AMERICAN STANDARD NO. 2411.015 GRID DRAIN. 4. SUPPLIES: CHICAGO NO. 1017ABCP-MM 1/2" I.P.S. FLEXIBLE SUPPLIES WITH LOOSE KEY STOPS. 5. INSULATION: WATER SUPPLY & ALL DRAINAGE PIPES UNDER LAVATORY WITH TRUEBRO LAV GUARD.	SEE ARCH DWG FOR ACC HEIGHT
L-3	N/A	MULTI-STATION WALL HUNG WASH-UP TROUGH WITH BACKSPLASH	1	1	2	1-1/2	3/4	3/4	*	1-1/4 x 1-1/2	COUNTER MOUNTED	ADA	-	1. FIXTURE: SEE ARCH DRAWING 2. FAUCET: CHICAGO FAUCETS 857-E2805AB-665PSH WITH MIXING VALVE CHICAGO 560-045JKJRBF 3. SUPPLIES: CHICAGO NO. 1017ABCP-MM 1/2" I.P.S. FLEXIBLE SUPPLIES WITH LOOSE KEY STOPS. 4. DRAIN: JT-150 CAST P-TRAP.	
DF-1	N/A	DRINKING FOUNTAIN	1	1	2	1-1/2	3/4	*	*	2	WALL HUNG	ADA HI-LO	HAWS NO. 1119.14 OR EQUAL	1. FIXTURE: DUAL HEIGHT WALL MOUNTED, BARRIER FREE, 14 GAUGE TYPE 304, STAINLESS STEEL PUSH BOTTOM VALVE, POLISHED CHROME PLATED BRASS BUBBLER HEAD AND WASTE STRAINER, VANDAL-RESISTANT BOTTOM PLATE AND 1-1/4"NPT TRAP. 2. SUPPLIES: CHICAGO NO. 1017-MM 1/2" I.P.S. FLEXIBLE SUPPLIES WITH LOOSE KEY STOP. 3. CARRIER: HAWS NO. 6710 WALL SUPPORT MOUNTING PLATE.	PROVIDE WATER FILTER 3MFF100 OR EQUAL. PROVIDE WALL-MOUNT BOTTLE FILLER HAWS 1920W OR EQUAL.
S-1	N/A	SINK	1	1	2	1-1/2	3/4	3/4	*	2	COUNTER MOUNTED	ADA	JUST SL-2131-A-GR-6 OR EQUAL	1. FIXTURE: 18 GAUGE TYPE 304, COUNTER MOUNTED STAINLESS STEEL SINK 31"L X 21"W X 6"D. 2. FAUCET: DECK MOUNTED 8" FIXED CENTERS CONCEALED HOT AND COLD WATER SINK FAUCET. 5-1/4" SWING GOOSENECK SPOUT, 1.0 GPM VANDAL PROOF NON-AERATING LAMINAR OUTLET WITH 4"VANDAL PROOF WRISTBLADE HANDLES.	
SA-1	N/A	SHOWER	*	2	*	1-1/2	3/4	3/4	*	*	WALL HUNG	ADA ADULT	ACORN 410BBF-04-1-8-FH	1. FIXTURE: SHOWER PACKAGE ASSEMBLY WITH ADA COMPLAINT CONTROL VALVE WITH LEVER HANDLE OR PUSHBUTTON, A FIXED UPPER SHOWER HEAD, A LEVER HANDLE DIVERTER VALVE, A QUICK DISCONNECT HAND SHOWER WITH VACUUM BREAKER AND FLOW CONTROL, VALVE SUPPLY FLEXIBLE HOSE CONNECTORS.	PROVIDE 2.0 GPM FLOW CONTROL.
SS-1	N/A	SERVICE & MOP SINK	3	3	3	1-1/2	3/4	3/4	*	3	FLOOR MOUNTED	PRIVATE	KOHLER 6710 OR EQUAL	1. FIXTURE: ACID RESISTANT ENAMELED CAST IRON, FLOOR CORNER SERVICE SINK, 28"X28", COATED WIRE RIM GUAED. 2. FAUCET: CHICAGO 897RCP WALL FAUCET WITH VACUUM BREAKER, STOPS IN SHANKS AND THREADED SPOUT WITH PAIL HOOK. 3. DRAIN: KOHLER NO. K-9146 OR AMERICAN STANDARD NO. 7721.038 STRAINER WITH 3" I.P.S. DRAIN.	
HB-1	N/A	HOSE BIBB	*	1	*	*	3/4	*	*	*	WALL RECESSED	OUTDOOR	ACORN NO. 8104 OR EQUAL	1. RECESSED WALL HOSE BOX WITH VACUUM BREAKER, SCREWDRIVER STOP, VANDAL RESISTANT LOCK SHIELD BONNET AND REMOVABLE LOOSE KEY HANDLE. CHROME FINISH BRASS CASTING VALVE WITH ONE PIECE CONSTRUCTION BOX WITHOUT LOCKING COVER.	PROVIDE IN ACCESS PANEL.
HB-2	N/A	HOSE BIBB	*	1	*	*	3/4	*	*	*	WALL RECESSED	TOILET	ACORN NO. 8104 OR EQUAL	1. RECESSED WALL HOSE BOX WITH VACUUM BREAKER, SCREWDRIVER STOP, VANDAL RESISTANT LOCK SHIELD BONNET AND REMOVABLE LOOSE KEY HANDLE. CHROME FINISH BRASS CASTING VALVE WITH ONE PIECE CONSTRUCTION BOX WITHVANDAL RESISTANT LOCKING COVER.	
HB-3	N/A	HOSE BIBB	*	3	*	*	3/4	*	*	*	BENT NOSE	ROOF	ACORN NO. 8126 OR EQUAL	1. ROUGH CROME PLATED WITH LOCKSHIELD BONNET AND REMOVAL KEY HANDLE PROVIDE WITH VACUUM BREAKER.	
TP-1	N/A	TRAP PRIMER	*	*	*	*	1/2	*	*	*	-	-	MIFAB MR-500-NPB	1. AUTOMATIC MULTI-TRAP PRIMER. 1/2" IN AND OUT.PRESSURE DROP OF 3PSI SHALL ACTIVATE TRAP SEAL PRIMERS.	
WHA-1	N/A	WATER HAMMER ARRESTOR	*	*	*	*	*	*	*	*	-	-	PPP INC.	1. TYPE "K" COPPER SIZED IN ACCORDANCE WITH PDI METHOD STANDARD WH-LO1 OR PPP SIZING AND SELECTION TABLE.	
FD-1	N/A	FLOOR DRAIN	*	*	2	1-1/2	*	*	*	2	-	W/TP CONNECTION	J.R. SMITH NO. 2005Y-U OR EQUAL	1. DRAIN WITH DUCO CAST IRON BODY, FLASHING COLLAR, PROTECTOR CAP AND NICKEL BRONZE ADJUSTABLE STRAINER HEAD WITH SECURED SQUARE HOLE AND VANDAL PROOF GRATE, TRAP PRIMER CONNECTION.	
FS-1	N/A	FLOOR SINK	2	*	3	1-1/2	*	*	*	3	-	W/TP CONNECTION	J.R. SMITH NO. 3140 OR EQUAL	1. FLOOR SINK WITH DOME BOTTOM STRAINER. PROVIDE GRATE AND TRAP PRIMER CONNECTION AS REQUIRED.	
RD-1	RD-1	ROOF DRAIN	*	*	*	*	*	*	*	*	-	-	JR SMITH 1010 OR EQUAL ZURN	1. DUCO CAST IRON BODY WITH COMBINED FLASHING CLAMP AND GRAVEL STOP WITH POLYETHYLENE DOME.	
RD-2	RD-2	OVERFLOW DRAIN	*	*	*	*	*	*	*	*	-	-	JR SMITH 1080 OR EQUAL ZURN	1. DUCO CAST IRON BODY, FLASHING CLAMP AND GRAVEL STOP WITH POLYETHYLENE DOME, AND CAST IRON WATER DAM. PROVIDE JR SMITH MODEL 1775 FOR DOWNSPOUT COVER ON A WALL WHERE AN OVERFLOW ROOF DRAIN CONCEALED LEADER DISCHARGES ABOVE FINISHED GRADE.	

THE CITY OF LOS ANGELES OR ITS OFFICERS OR AGENTS SHALL NOT BE RESPONSIBLE FOR THE ACCURACY OR COMPLETENESS OF ELECTRONIC COPIES OF THIS PLAN

TTLB TEMPLATE REVISION DATE:
SHEET ISSUE DATE:
FILE PATH:

REVISION DATES (DESIGN STAGE)

BUREAU OF ENGINEERING
OFFICIAL RECORD

BUREAU OF ENGINEERING
ENGINEERING
CITY OF LOS ANGELES

NO.	REVISION DESCRIPTION	DATE	BY

BUILDING -
INDEX
RP-300106

REGISTERED PROFESSIONAL ENGINEER
JAMES H. SHWE
No. 26903
Renewal: 9/30/20
MECHANICAL
STATE OF CALIFORNIA

DEPARTMENT OF PUBLIC WORKS
CITY OF LOS ANGELES

TED ALLEN, PE
ARCHITECTURAL

	CITY
DATE	26.APR.19
	26.APR.19
	26.APR.19
	26.APR.19
	26.APR.19

ARCHITECT/ENGINEER : JAMES H SHWE LIC. NO.: M 26903
DESIGNED BY: JS
DRAWN BY: SC, RN
CHECKED BY: JS
APPROVED BY: MAHMOOD KARIMZADEH, AIA, DEPUTY CITY ENGINEER

VERTICAL CONTROL:
HORIZONTAL:
SHEET: SCHEDULES
PROJECT: STUDIO CITY GYMNASIUM
ADDRESS: 12621 RYE STREET, STUDIO CITY, CA 91604

Project Status
PROJECT ISSUE DATE: Project Issue Date

WORK ORDER
E170267B
PLAN FILE
DRAWING
P002
SHEET 164 OF SHEET 211

16007:\STUDIO CITY-REC CENTER\07-29-2016

WORKSHEET (WS-1)
BASELINE WATER USE

BASELINE WATER USE CALCULATION TABLE										
FIXTURE TYPE	FLOW RATE		DURATION		DAILY USES		OCCUPANTS		GALLONS PER DAY
Showerheads, residential	2.0 gpm @ 80 psi	x	8 min.	x	1	x	Note 1a	=	
Showerheads, nonresidential	2.0 gpm @ 80 psi	x	5 min.	x	1	x	4	=	40
Lavatory faucets, residential	1.2 gpm @ 60 psi	x	0.25 min.	x	3	x		=	
Lavatory Faucets nonresidential/ public uses	0.5 gpm @ 60 psi	x	0.25 min	x	3	x	251	=	94.1
Kitchen faucets	1.8 gpm @ 60psi	x	4 min.	x	1	x	10	=	72
Wash fountains	1.8 gpm/20 [rim space(in) @ 60 psi]	x		x	3	x		=	
Metering faucets, residential	0.25 gallons/cycle	x	0.25 min.	x	3	x		=	
Metering faucets, non-residential	0.20 gallons/cycle	x	0.25 min.	x	3	x		=	
Metering faucets for wash fountains	0.20 gal/cycle/20 [rim space (in.) @ 60 psi]	x	0.25 min.	x	3	x		=	
Water Closets	1.28 gallons/flush	x	1 flush	x	1 male[2] 3 females	x	126	=	161.28
Urinals	0.125 gal/flush	x	1 flush	x	2 males	x	126	=	31.25
Total daily baseline water use (BWU)								=	398.53

1. Refer to Table A, Chapter 4 of the Los Angeles Plumbing Code, for occupant load factors.
   a. Shower use by occupants depends on the type of use of a building or portion of a building, e.g. total occupant load for a health club, but only a fraction of the occupants in an office building as determined by the anticipated number of users.
   b. Kitchen faucet use is determined by occupant load of the area served by the fixture.
2. The daily use number shall be increased to three if urinals are not installed in the room.

As a covered entity under Title II of the Americans with Disabilities Act, the City of Los Angeles does not discriminate on the basis of disability and, upon request, will provide reasonable accommodation to ensure equal access to its programs, services and activities.

WORKSHEET (WS-2)
BASELINE WATER USE

20- PERCENT REDUCTION WATER USE CALCULATION TABLE									
FIXTURE TYPE	FLOW RATE		DURATION		DAILY USES		OCCUPANTS		GALLONS PER DAY
Showerheads, residential		x	8 min.	x	1	x	Note 1a	=	
Showerheads, nonresidential	1.6	x	5 min.	x	1	x	4	=	32
Lavatory faucets, residential		x	0.25 min.	x	3	x		=	
Lavatory Faucets nonresidential/ public uses	0.35	x	0.25 min	x	3	x	251	=	65.89
Kitchen faucets	1.0	x	4 min.	x	1	x	10	=	40.0
Wash fountains		x		x	3	x		=	
Metering faucets, residential		x	0.25 min.	x	3	x		=	
Metering faucets, Non-residential		x	0.25 min.	x	3	x		=	
Metering faucets for wash fountains		x	0.25 min.	x	3	x		=	
Water Closets	1.1	x	1 flush	x	1 male[2] 3 females	x	126	=	138.6
Urinals	0.125	x	1 flush	x	2 males	x	126	=	31.5
Urinals Nonwater supplied	0.0 gal/ flush	x	1 flush	x	2 male	x		=	0
Proposed water use (BWU)								=	267.99

20% Reduction 398.53 (BWU from WS-1) x 0.80 = 314.824 Allowable water use
____% Reduction ____ (BWU from WS-1) x 0. ____ = ____ Allowable water use

1. For occupancies, refer to Table A, Chapter 4, Los Angeles Plumbing Code, for occupant load factors.
   a. Shower use by occupants depends on the type of use of a building or portion of a building, e.g., total occupant load for a health club, but only a fraction of the occupants in an office building as determined by the anticipated number of users.
   b. Kitchen faucet use is determined by the occupant load of the area served by the fixture.
2. Includes single and dual flush water closets with an effective flush of 1.28 gallons or less.
   Single flush toilets - The effective flush volume shall not exceed 1.28 gallons (4.8 liters). The effective flush volume is the average flush volume when tested in accordance with ASME A112.19.2.
   Dual flush toilets - The effective flush volume shall not exceed 1.28 gallons (4.8 liters). The effective flush volume is defined as the composite, average flush volume of two reduced flushes and one full flush. Flush volumes will be tested in accordance with ASME A112.19.2 and ASME A112.19.14.
3. The daily use number shall be increased to three if urinals are not installed in the room.
4. Where complying faucets are unavailable, aerators rated at 35 gpm or other means may be used to achieve reduction.

As a covered entity under Title II of the Americans with Disabilities Act, the City of Los Angeles does not discriminate on the basis of disability and, upon request, will provide reasonable accommodation to ensure equal access to its programs, services and activities.

PRESSURE REGULATING VALVE *

SYMBOL	SERVICE	LOCATION	CAPACITY (GPM)	MANUFACTURER & MODEL	SIZE (INCH)	SET PRESSURE (PSI)	OUTLET PRESSURE (PSI)	DROP (PSI)	REMARKS
PRV 1	DOMESTIC COLD WATER	YARD	150	WILKINS 500 YSBR	3	76	70	6	–
PRV 2	DOMESTIC COLD WATER	YARD	150	WILKINS 500 YSBR	3	76	70	6	–

BACKFLOW PREVENTER *

SYMBOL	SERVICE	LOCATION	TYPE	MANUFACTURER & MODEL	SIZE (INCH)	L & W (INCH)	PRESSURE DROP (PSI)	WEIGHT (LBS)	REMARK
BFP 1	BUILDING WATER SUPPLY	YARD	REDUCE PRESSURE PRINCIPAL	WILKINS MODEL 975	3	47x 14	12 PSI @ 175 GPM	225	WITH 'Y' STRAINER

ELECTRIC WATER HEATER *

TAG.	SERVICE	LOCATION	TYPE	MANUFACTURER & MODEL	CAPACITY GALLONS	ELECTRICAL KW	ELECTRICAL VOLT / ø	ELECTRICAL FLA	OPER. WEIGHT (LBS)	REFERENCE RELEVANT DETAIL	REMARKS
WH 1	LAVATORIES & SERVICE SINK	JAN RM 207	HYBRID ELECTRIC COMMERCIAL WATER HEATER	RHEEM HPLD-80	80	–	208 / 1	30	910.4	–	HIGH EFFICIENCY 74"H X 24-1/4"DIA WATER HEATER. INCOLOY STAINLESS STEEL RESISTOR ELEMENTS , DRY-FIRE PROTECTION AND 2" NON-CFC FOAM INSULATION, LOW LEAD COMPLIANT. INSTALLED PER MANUFACTURER'S INSTRUCTIONS.
EWH 1	LAVATORY & SHOWER	RESTROOM 102	WALL MOUNTED ELECTRIC INSTANTANEOUS WATER HEATER	Eemax EX023240T2	MINIMUM FLOW RATE 1.5 GPM	23	240 / 1	96	10.5	–	SERIES TWO, COMMERCIAL "T2", PARALLEL MODELS (TWO HEATING MODULES) WITH THERMOSTATIC CONTROL. CONTINUOUS HOT WATER, ADJUSTABLE TEMPERATURE. SIZE = 10"X 10.5" X 3". ENAMELED STEEL COVER. PIPE-FITTINGS: 3/8" COMPRESSION AT BOTTOM OF UNIT. UL LISTED: E86887 (M). U.S. PATENT #'S: 4,762,980 AND 4,960,976. INSTALLED PER MANUFACTURER INSTALLATION INSTRUCTIONS.
EWH 2	SERVICE SINK	PARK STORAGE 106	WALL MOUNTED ELECTRIC INSTANTANEOUS WATER HEATER	Eemax SP2412	MINIMUM FLOW RATE 0.5 GPM	2.4	120 / 1	20	3	–	INSTANT- TEMP LOW FLOW MODEL FOR SIMULTANEOUS HOT WATER AT 105°F – 110°F. SIZE = 10.75"X 5.75" X 2.875" MATERIALS: COVER – ABS UL RATED 94VO. WHITE COLOR. ELEMENT: REPLACEABLE CARTRIDGE INSERT. PIPE-FITTINGS: 3/8" COMPRESSION AT TOP OF UNIT. UL LISTED: E86887 (M). U.S. PATENT #'S: 4,762,980 AND 4,960,976. INSTALLED PER MANUFACTURER INSTALLATION INSTRUCTIONS.

THERMOSTATIC MIXING VALVE *

TAG.	SPEC. REF. & SECTION	SERVICE	LOCATION	MANUFACTURER & MODEL	SIZE (INCH)	PRESSURE DROP (PSI)	GPM (MIN. – MAX.)	REFERENCE RELEVANT DETAIL	REFERENCE ANCHORAGE DETAIL	REMARKS
TMVA 1	TMVA-3 & 22 1000	PLBG FIXTURES	CUST (107)	LEONARD TM SERIES NEW GENERATION SYSTEM MODEL # TM- 26-LF-E-RF-BDT-IT	3/4" (IN) 3/4" (OUT)	30 @ 25	1 to 35	–	–	WALL MOUNTED TMVA-1 SET TO DELIVER 115°F HW. ¾" INLETS, 1" OUTLET EXPOSED ASSEMBLY WITH TEST CONNECTION PIPING OUTLET.

PUMP *

SYMBOL	SYSTEM	LOCATION	TYPE	MANUFACTURER & MODEL	GPM	HEAD FT.	MOTOR HP	MOTOR VOLT / PH	MOTOR RPM	OPER. WEIGHT LBS.	REMARKS
CP 1	DOMESTIC HOT WATER RETURN	JANITOR ROOM	INLINE CIRCULATOR	GRUNDFOS UPS15-55SUC/TLC	15	18	1/8	115 / 1	3250	12	STAINLESS STEEL. SEAL MECHANICAL W/OIL LUBRICATED PUMP BEARING. PROVIDE WITH BUILT-IN OVERLOAD PROTECTION. START/STOP BY INTEGRAL 24HR/7 TIMER. ENABLE BY 7 DAY PROGRAMMABLE TIMER.
CP 2	DOMESTIC HOT WATER RETURN	JANITOR ROOM	INLINE CIRCULATOR	GRUNDFOS UPS15-55SSUC/TLC	15	18	1/8	115 / 1	3250	12	

EXPANSION TANK *

SYMBOL	SERVICE	LOCATION	MANUFACTURER & MODEL	CAPACITY (GALLONS)	SIZE DIA x HEIGHT (IN)	SYSTEM VOLUME (GALLONS)	MAX. WORKING PRESSURE (PSIG)	OPER. WEIGHT (LBS)	REMARKS
ET 1	DOMESTIC HOT WATER	JANITOR ROOM	AMTROL ST-12 (ASME)	4.5	11 x 15	–	150	50	MOUNT TANK WITH UNI-STRUT CLAMP FOR SEISMIC SUPPORT

* INSTALL THE SCHEDULED EQUIPMENT PER MANUFACTURER'S PUBLISHED INSTALLATION INSTRUCTIONS. PROVIDE ALL ACCESSORIES REQUIRED FOR PROPER OPERATION PER CODE AS REQUIRED BY MANUFACTURER. OMISSION OF MINOR DETAILS SHALL NOT RELIEVE THE CONTRACTOR FROM THE PROVISION OF REQUIRED ACCESSORIES OR COMPONENTS.

BUREAU OF ENGINEERING OFFICIAL RECORD

BUREAU OF ENGINEERING
ENGINEERING CITY OF LOS ANGELES

NO.	REVISION DESCRIPTION	DATE	BY

BUILDING -
INDEX RP-300106

REGISTERED PROFESSIONAL ENGINEER JAMES H. SHIWE No. 26903 Renewal: 9/30/20 MECHANICAL STATE OF CALIFORNIA

DEPARTMENT OF PUBLIC WORKS
CITY OF LOS ANGELES

	DATE	
CITY		
VERTICAL CONTROL:	26.APR.19	
HORIZONTAL	26.APR.19	
SHEET SCHEDULES	26.APR.19	
PROJECT STUDIO CITY GYMNASIUM	26.APR.19	
ADDRESS 12621 RYE STREET, STUDIO CITY, CA 91604	26.APR.19	

TED ALLEN, PE ARCHITECTURAL
ARCHITECT/ENGINEER: JAMES H SHIWE LIC. NO.: M 26903
DESIGNED BY: JS
DRAWN BY: SC, RN
CHECKED BY: JS
APPROVED BY: MAHMOOD KARIMZADEH, AIA, DEPUTY CITY ENGINEER

Project Status
PROJECT ISSUE DATE: Project Issue Date

WORK ORDER E170267B
PLAN FILE
DRAWING P003
SHEET 165 OF SHEET 211

I:\2007\STUDIO CITY-REC CENTER\07-29-2019

TTLB_TEMPLATE REVISION DATE:
SHEET ISSUE DATE:
FILE PATH:
REVISION DATES (DESIGN STAGE)

THE CITY OF LOS ANGELES OR ITS OFFICERS OR AGENTS SHALL NOT BE RESPONSIBLE FOR THE ACCURACY OR COMPLETENESS OF ELECTRONIC COPIES OF THIS PLAN SHEET.

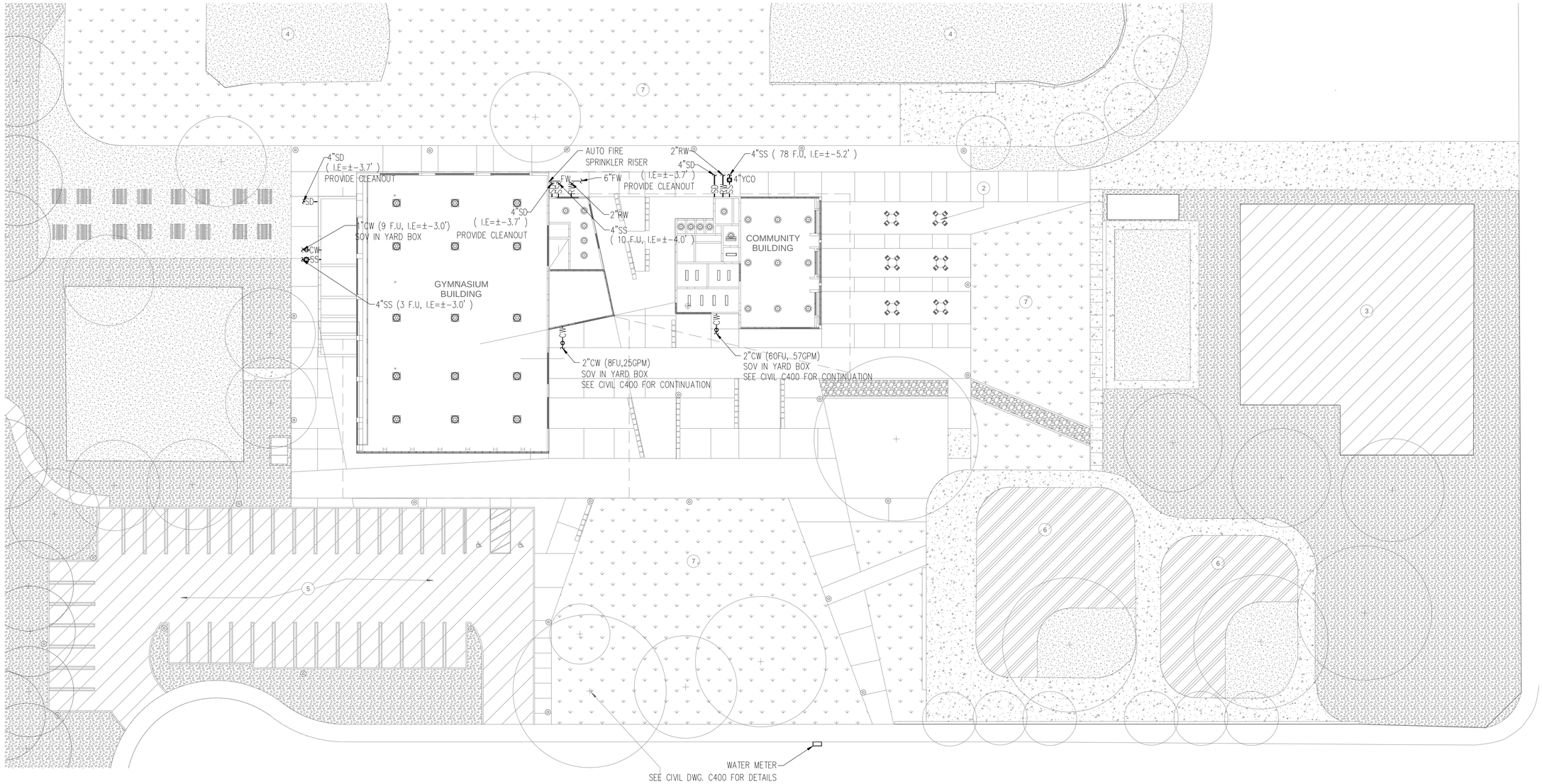

1 PLUMBING SITE PLAN

SCALE: 1" = 20'-0"

THE CITY OF LOS ANGELES OR ITS OFFICERS OR AGENTS SHALL NOT BE RESPONSIBLE FOR THE ACCURACY OR COMPLETENESS OF ELECTRONIC COPIES OF THIS PLAN

SHEET:

TTLB TEMPLATE REVISION DATE:
SHEET ISSUE DATE:
FILE PATH:

REVISION DATES (DESIGN STAGE)

BUREAU OF ENGINEERING

ENGINEERING
CITY OF LOS ANGELES

NO.	REVISION DESCRIPTION	DATE	BY
INDEX		BUILDING	-

RP-300106

REGISTERED PROFESSIONAL ENGINEER
JAMES H. SHWE
No. 26903
Renewal: 9/30/20
MECHANICAL
STATE OF CALIFORNIA

DEPARTMENT OF PUBLIC WORKS

CITY OF LOS ANGELES

TED ALLEN, PE	CITY		
ARCHITECTURAL	DATE		
ARCHITECT/ENGINEER: JAMES H SHWE	LIC. NO.: M 26903	26.APR.19	
DESIGNED BY: JS		26.APR.19	
DRAWN BY: SC, RN		26.APR.19	
CHECKED BY: JS		26.APR.19	
APPROVED BY: MAHMOOD KARIMZADEH, AIA, DEPUTY CITY ENGINEER		26.APR.19	

VERTICAL CONTROL:
HORIZONTAL:

SHEET: PLUMBING SITE PLAN

PROJECT: STUDIO CITY GYMNASIUM

ADDRESS: 12621 RYE STREET, STUDIO CITY, CA 91604

Project Status
PROJECT ISSUE DATE: Project Issue Date

BUREAU OF ENGINEERING
OFFICIAL RECORD

WORK ORDER
E170267B

PLAN FILE

DRAWING
PS010

SHEET 166 OF SHEET 211

16007/STUDIO CITY REC CENTER/07-29-2019

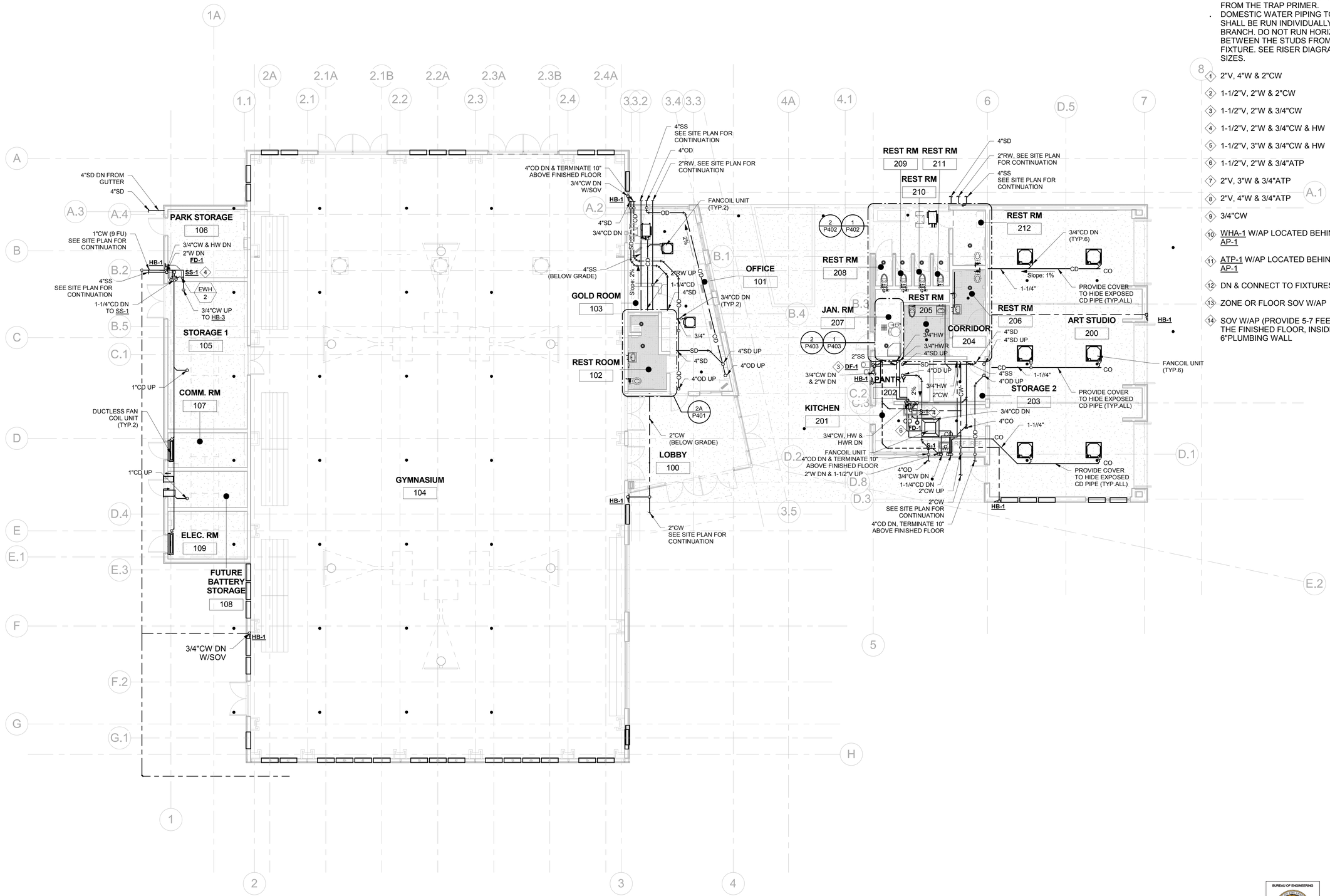

1 FIRST FLOOR PLAN

Scale: 1/8"=1'-0"

NOTES

. TRAP PRIMERS SERVING MORE THAN ONE FIXTURE SHALL BE PROVIDED WITH A DISTRIBUTION UNIT AND A SEPERATED LINE SHALL BE PROVIDED TO EACH FIXTURE FROM THE TRAP PRIMER.
. DOMESTIC WATER PIPING TO EACH FIXTURE SHALL BE RUN INDIVIDUALLY FROM EACH BRANCH. DO NOT RUN HORIZONTALLY BETWEEN THE STUDS FROM FIXTURE TO FIXTURE. SEE RISER DIAGRAM FOR PIPE SIZES.

1. 2"V, 4"W & 2"CW
2. 1-1/2"V, 2"W & 2"CW
3. 1-1/2"V, 2"W & 3/4"CW
4. 1-1/2"V, 2"W & 3/4"CW & HW
5. 1-1/2"V, 3"W & 3/4"CW & HW
6. 1-1/2"V, 2"W & 3/4"ATP
7. 2"V, 3"W & 3/4"ATP
8. 2"V, 4"W & 3/4"ATP
9. 3/4"CW
10. WHA-1 W/AP LOCATED BEHIND AP-1
11. ATP-1 W/AP LOCATED BEHIND AP-1
12. DN & CONNECT TO FIXTURES
13. ZONE OR FLOOR SOV W/AP
14. SOV W/AP (PROVIDE 5-7 FEET FROM THE FINISHED FLOOR, INSIDE A MIN. 6"PLUMBING WALL

THE CITY OF LOS ANGELES OR ITS OFFICERS OR AGENTS SHALL NOT BE RESPONSIBLE FOR THE ACCURACY OR COMPLETENESS OF ELECTRONIC COPIES OF THIS PLAN

FILE PATH: C:\Revit Local File\16007.00 Studio City-Rec Center (Gym)\SCRC-Project Model_PLBG Local SWL-2019-07-29_R17.rvt

TTLB TEMPLATE REVISION DATE: 08/07/17
SHEET ISSUE

REVISION DATES (DESIGN STAGE)

BUREAU OF ENGINEERING
CITY OF LOS ANGELES

NO.	REVISION DESCRIPTION	DATE	BY

BUILDING -

INDEX RP-300106

DEPARTMENT OF PUBLIC WORKS
BUREAU OF ENGINEERING

TED ALLEN, PE
ARCHITECTURAL
ARCHITECT: ARCHITEC LIC. NO.: LICEN
DESIGNED BY: Designer
DRAWN BY: SC, RN
CHECKED BY: JS
APPROVED BY: MAHMOOD KARIMZADEH, AIA, DEPUTY CITY

CITY	DATE
	26.APR.19
	26.APR.19
	26.APR.19
	26.APR.19
	26.APR.19

VERTICAL CONTROL:
HORIZONTAL:

SHEET FLOOR PLAN

PROJECT STUDIO CITY RECREATION CENTER

ADDRESS 12621 RYE STREET, STUDIO CITY, CA 91604

Project Status
PROJECT ISSUE DATE: 26.APR.19

CITY OF LOS ANGELES

BUREAU OF ENGINEERING OFFICIAL RECORD

WORK ORDER E170267B
PLAN FILE
DRAWING P100
SHEET 167 OF SHEET 211

PLOTTED:7/29/2019 5:02:54 PM

THE CITY OF LOS ANGELES OR ITS OFFICERS OR AGENTS SHALL NOT BE RESPONSIBLE FOR THE ACCURACY OR COMPLETENESS OF ELECTRONIC COPIES OF THIS PLAN

FILE PATH: C:\Revit Local File\16007.00 Studio City-Rec Center (Gym)\SCRC-Project Model_PLBG Local SWL-2019-07-29_R17.rvt

TTLB TEMPLATE REVISION DATE: 01/23/18
SHEET ISSUE

REVISION DATES (DESIGN STAGE)

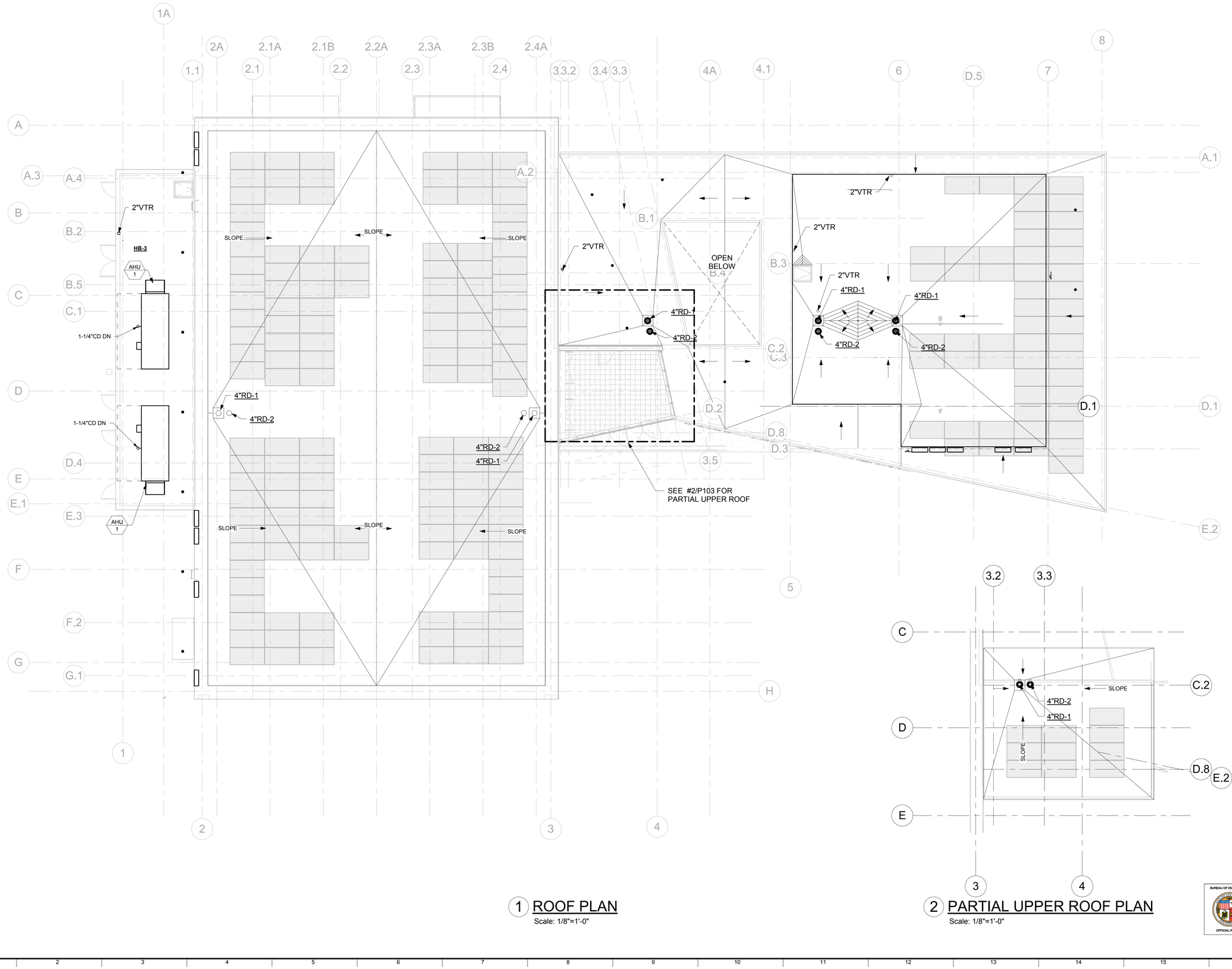

1 ROOF PLAN
Scale: 1/8"=1'-0"

2 PARTIAL UPPER ROOF PLAN
Scale: 1/8"=1'-0"

BUREAU OF ENGINEERING
OFFICIAL RECORD

DEPARTMENT OF PUBLIC WORKS
CITY OF LOS ANGELES

ENGINEERING
CITY OF LOS ANGELES

NO.	REVISION DESCRIPTION	DATE	BY

BUILDING -

INDEX RP-300106

CITY
DATE 26.APR.19

ARCHITECTURAL
TED ALLEN, PE
LIC. NO.: LICENS

ARCHITECT: ARCHITEC
DESIGNED BY: JS
DRAWN BY: SC, RN
CHECKED BY: JS
APPROVED BY:MAHMOOD KARIMZADEH, AIA, DEPUTY CITY

Project Status
PROJECT ISSUE DATE: 26.APR.19

VERTICAL CONTROL:
HORIZONTAL

SHEET ROOF PLAN

PROJECT STUDIO CITY RECREATION CENTER

ADDRESS 12621 RYE STREET, STUDIO CITY, CA 91604

WORK ORDER E170267B
PLAN FILE
DRAWING P103
SHEET 168 OF SHEET 211

PLOTTED:7/29/2019 5:02:59 PM

THE CITY OF LOS ANGELES OR ITS OFFICERS OR AGENTS SHALL NOT BE RESPONSIBLE FOR THE ACCURACY OR COMPLETENESS OF ELECTRONIC COPIES OF THIS PLAN

FILE PATH: C:\Revit Local File\16007.00 Studio City-Rec Center (Gym)\SCRC-Project Model_PLBG Local SWL-2019-07-29_R17.rvt

TTLB TEMPLATE REVISION DATE: 08/07/17
SHEET ISSUE

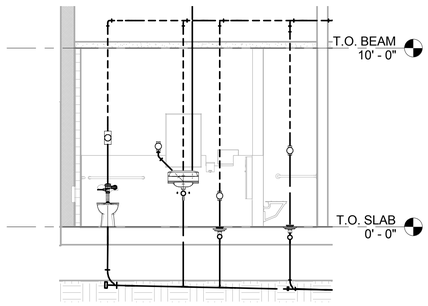

2C SECTION A

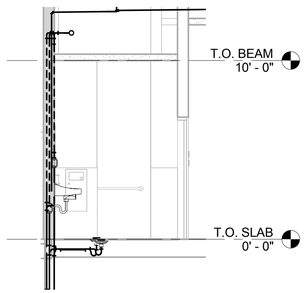

2B SECTION B

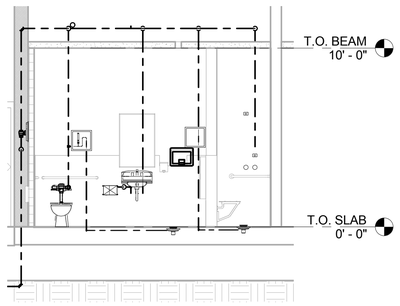

1C SECTION A

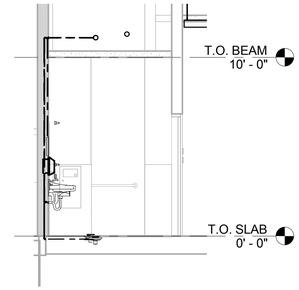

1B SECTION B

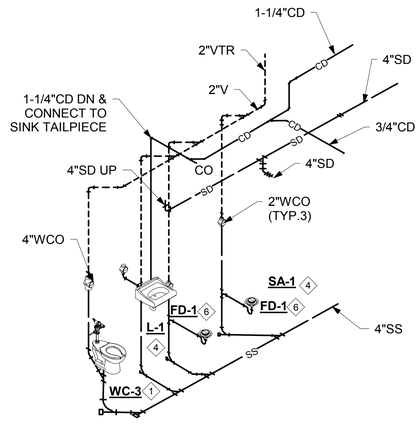

2D ISOMETRIC VIEW

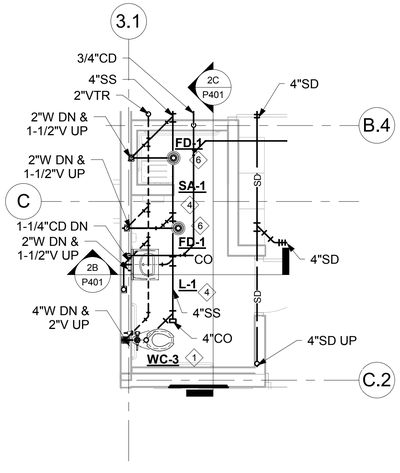

2A ENLARGED FLOOR PLAN

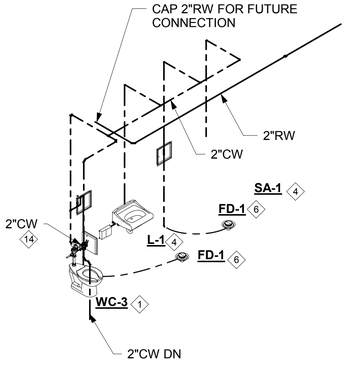

1D ISOMETRIC VIEW

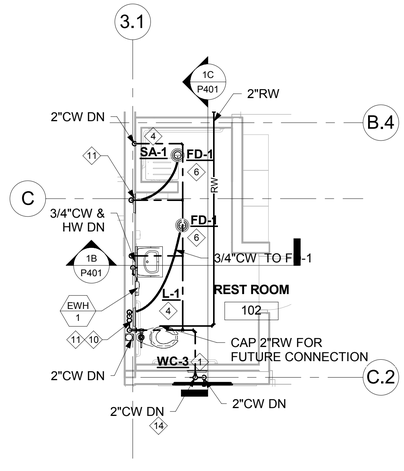

1A ENLARGED FLOOR PLAN

NOTES

. TRAP PRIMERS SERVING MORE THAN ONE FIXTURE SHALL BE PROVIDED WITH A DISTRIBUTION UNIT AND A SEPERATED LINE SHALL BE PROVIDED TO EACH FIXTURE FROM THE TRAP PRIMER.
. DOMESTIC WATER PIPING TO EACH FIXTURE SHALL BE RUN INDIVIDUALLY FROM EACH BRANCH. DO NOT RUN HORIZONTALLY BETWEEN THE STUDS FROM FIXTURE TO FIXTURE. SEE RISER DIAGRAM FOR PIPE SIZES.

1. 2"V, 4"W & 2"CW
2. 1-1/2"V, 2"W & 2"CW
3. 1-1/2"V, 2"W & 3/4"CW
4. 1-1/2"V, 2"W & 3/4"CW & HW
5. 1-1/2"V, 3"W & 3/4"CW & HW
6. 1-1/2"V, 2"W & 3/4"ATP
7. 2"V, 3"W & 3/4"ATP
8. 2"V, 4"W & 3/4"ATP
9. 3/4"CW
10. WHA-1 W/AP LOCATED BEHIND AP-1
11. ATP-1 W/AP LOCATED BEHIND AP-1
12. DN & CONNECT TO FIXTURES
13. ZONE OR FLOOR SOV W/AP
14. SOV W/AP (PROVIDE 5-7 FEET FROM THE FINISHED FLOOR, INSIDE A MIN. 6"PLUMBING WALL

ENLARGED FLOOR PLAN

Scale: 1/4" = 1'0"

REVISION DATES (DESIGN STAGE)

BUREAU OF ENGINEERING
CITY OF LOS ANGELES

DEPARTMENT OF PUBLIC WORKS
CITY OF LOS ANGELES

NO.	REVISION DESCRIPTION	DATE	BY

BUILDING 1

INDEX RP-300106

TED ALLEN, PE
ARCHITECTURAL
ARCHITECT: ARCHITEC LIC. NO.: LICENS
DESIGNED BY: Designer
DRAWN BY: SC, RN
CHECKED BY: JS
APPROVED BY: MAHMOOD KARIMZADEH, AIA, DEPUTY CITY

CITY	DATE
	26 APR 19
	26 APR 19
	26 APR 19
	26 APR 19
	26 APR 19

VERTICAL CONTROL:
HORIZONTAL

SHEET ENLARGED FLOOR PLANS

PROJECT STUDIO CITY RECREATION CENTER

ADDRESS 12621 RYE STREET, STUDIO CITY, CA 91604

Project Status
PROJECT ISSUE DATE: 26.APR.19

WORK ORDER E170267B

PLAN FILE

DRAWING P401

SHEET 169 OF SHEET 211

BUREAU OF ENGINEERING OFFICIAL RECORD

PLOTTED:7/29/2019 5:03:02 PM

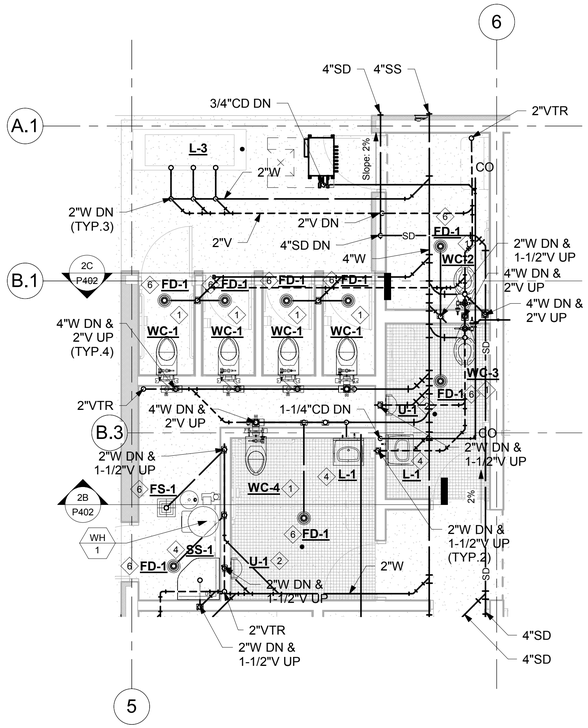

2A ENLARGED FLOOR PLAN

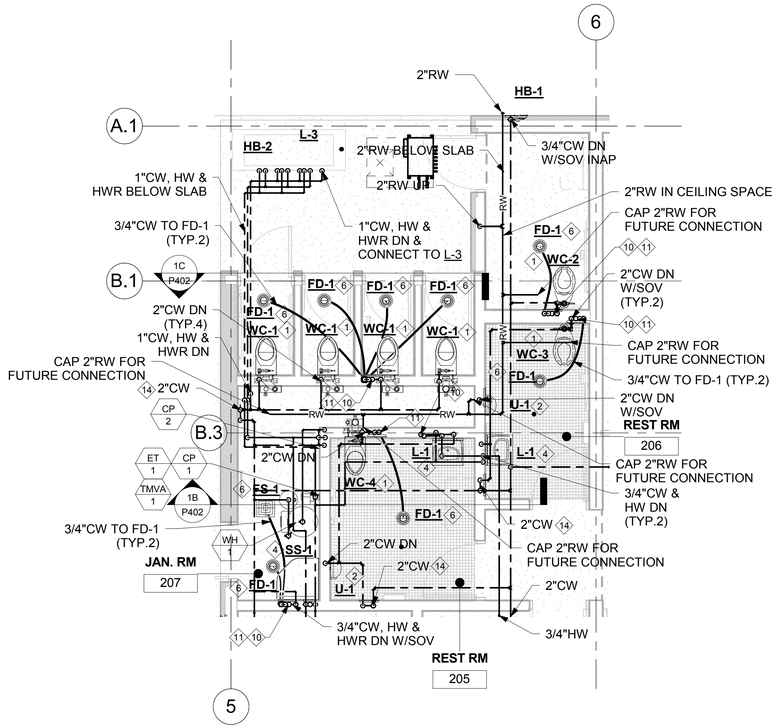

1A ENLARGED FLOOR PLAN

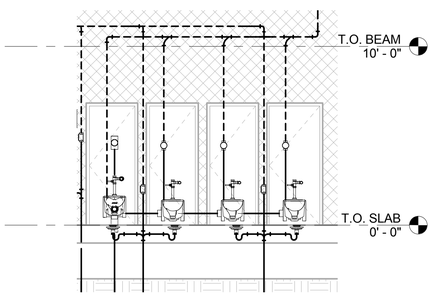

2C SECTION A

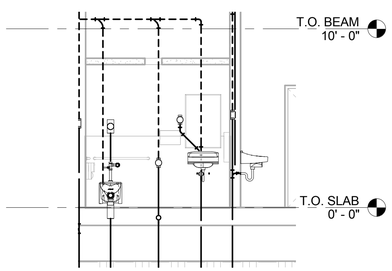

2B SECTION B

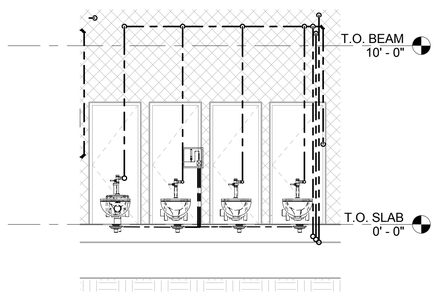

1C SECTION A

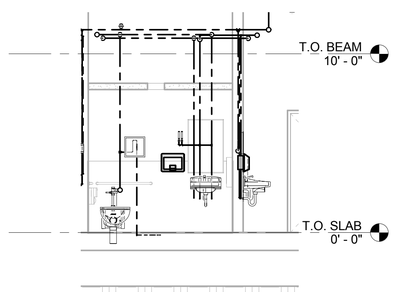

1B SECTION B

NOTES

. TRAP PRIMERS SERVING MORE THAN ONE FIXTURE SHALL BE PROVIDED WITH A DISTRIBUTION UNIT AND A SEPERATED LINE SHALL BE PROVIDED TO EACH FIXTURE FROM THE TRAP PRIMER.
. DOMESTIC WATER PIPING TO EACH FIXTURE SHALL BE RUN INDIVIDUALLY FROM EACH BRANCH. DO NOT RUN HORIZONTALLY BETWEEN THE STUDS FROM FIXTURE TO FIXTURE. SEE RISER DIAGRAM FOR PIPE SIZES.

1. 2"V, 4"W & 2"CW
2. 1-1/2"V, 2"W & 2"CW
3. 1-1/2"V, 2"W & 3/4"CW
4. 1-1/2"V, 2"W & 3/4"CW & HW
5. 1-1/2"V, 3"W & 3/4"CW & HW
6. 1-1/2"V, 2"W & 3/4"ATP
7. 2"V, 3"W & 3/4"ATP
8. 2"V, 4"W & 3/4"ATP
9. 3/4"CW
10. WHA-1 W/AP LOCATED BEHIND AP-1
11. ATP-1 W/AP LOCATED BEHIND AP-1
12. DN & CONNECT TO FIXTURES
13. ZONE OR FLOOR SOV W/AP
14. SOV W/AP (PROVIDE 5-7 FEET FROM THE FINISHED FLOOR, INSIDE A MIN. 6"PLUMBING WALL

ENGINEERING
CITY OF LOS ANGELES

BUREAU OF ENGINEERING

NO.	REVISION DESCRIPTION	DATE	BY

BUILDING -
INDEX RP-300106

DEPARTMENT OF PUBLIC WORKS
CITY OF LOS ANGELES

CITY	DATE	
	26 APR. 19	
	26 APR. 19	
	26 APR. 19	
	26 APR. 19	
	26 APR. 19	

TED ALLEN, PE
ARCHITECTURAL
ARCHITECT: ARCHITEC LIC. NO.: LICENS
DESIGNED BY: Designer
DRAWN BY: SC, RN
CHECKED BY: JS
APPROVED BY: MAHMOOD KARIMZADEH, AIA, DEPUTY CITY

Project Status
PROJECT ISSUE DATE: 26.APR.19

VERTICAL CONTROL:
HORIZONTAL:

SHEET ENLARGED FLOOR PLANS

PROJECT STUDIO CITY RECREATION CENTER

ADDRESS 12621 RYE STREET, STUDIO CITY, CA 91604

BUREAU OF ENGINEERING
OFFICIAL RECORD

WORK ORDER
E170267B
PLAN FILE
DRAWING
P402
SHEET 170 OF SHEET 211

PLOTTED:7/29/2019 5:03:10 PM

THE CITY OF LOS ANGELES OR ITS OFFICERS OR AGENTS SHALL NOT BE RESPONSIBLE FOR THE ACCURACY OR COMPLETENESS OF ELECTRONIC COPIES OF THIS PLAN

FILE PATH: C:\Revit Local File\16007.00 Studio City-Rec Center (Gym)\SCRC-Project Model_PLBG Local SWL-2019-07-29_R17.rvt

TTLB TEMPLATE REVISION DATE: 10/16/17
SHEET ISSUE

REVISION DATES (DESIGN STAGE)

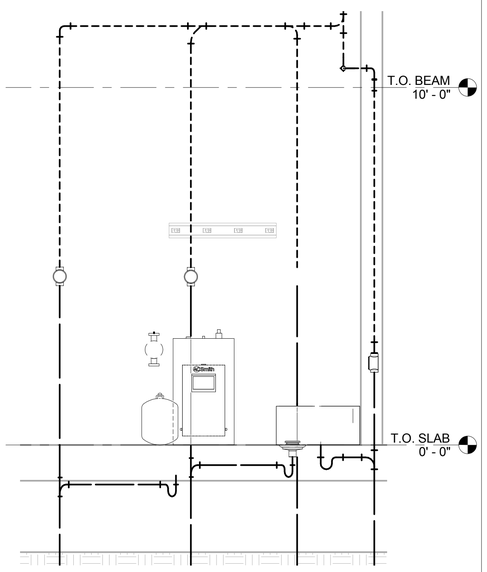

2C SECTION A

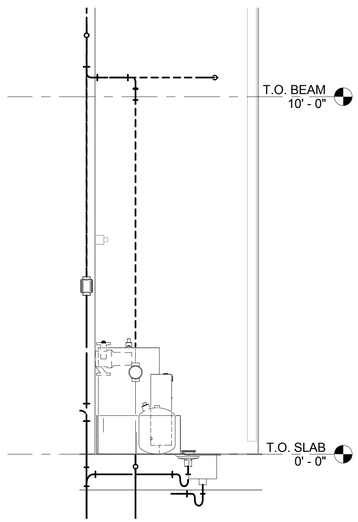

2B SECTION B

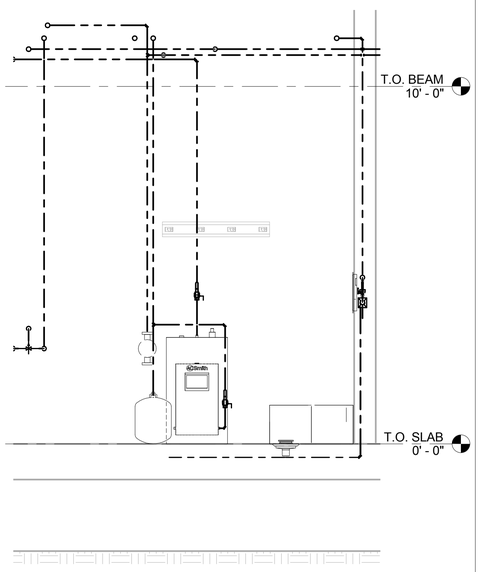

1C SECTION A

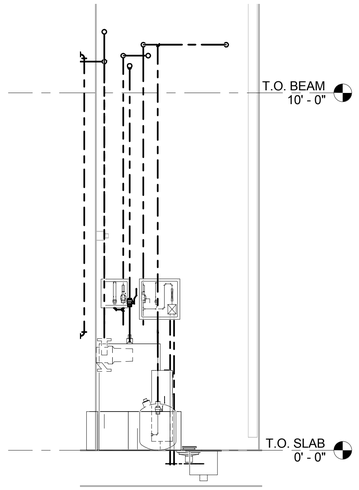

1B SECTION B

NOTES

. TRAP PRIMERS SERVING MORE THAN ONE FIXTURE SHALL BE PROVIDED WITH A DISTRIBUTION UNIT AND A SEPERATED LINE SHALL BE PROVIDED TO EACH FIXTURE FROM THE TRAP PRIMER.
. DOMESTIC WATER PIPING TO EACH FIXTURE SHALL BE RUN INDIVIDUALLY FROM EACH BRANCH. DO NOT RUN HORIZONTALLY BETWEEN THE STUDS FROM FIXTURE TO FIXTURE. SEE RISER DIAGRAM FOR PIPE SIZES.

1. 2"V, 4"W & 2"CW
2. 1-1/2"V, 2"W & 2"CW
3. 1-1/2"V, 2"W & 3/4"CW
4. 1-1/2"V, 2"W & 3/4"CW & HW
5. 1-1/2"V, 3"W & 3/4"CW & HW
6. 1-1/2"V, 2"W & 3/4"ATP
7. 2"V, 3"W & 3/4"ATP
8. 2"V, 4"W & 3/4"ATP
9. 3/4"CW
10. WHA-1 W/AP LOCATED BEHIND AP-1
11. ATP-1 W/AP LOCATED BEHIND AP-1
12. DN & CONNECT TO FIXTURES
13. ZONE OR FLOOR SOV W/AP
14. SOV W/AP (PROVIDE 5-7 FEET FROM THE FINISHED FLOOR, INSIDE A MIN. 6"PLUMBING WALL

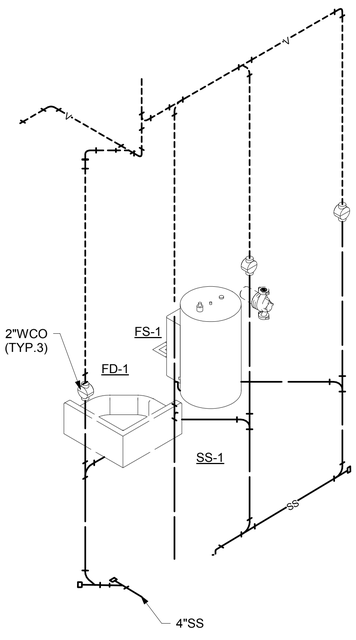

2D ISOMETRIC VIEW

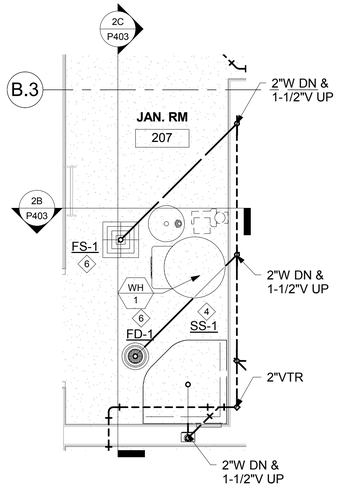

2A ENLARGED FLOOR PLAN

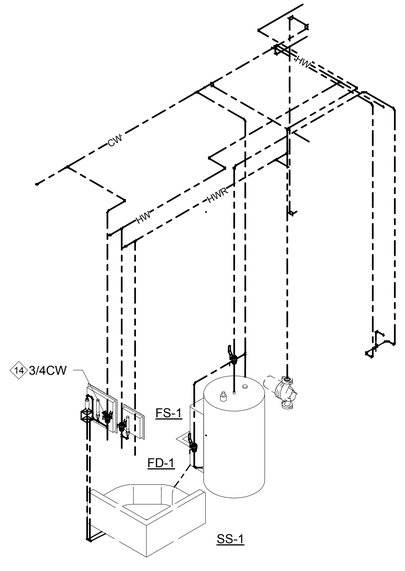

1D ISOMETRIC VIEW

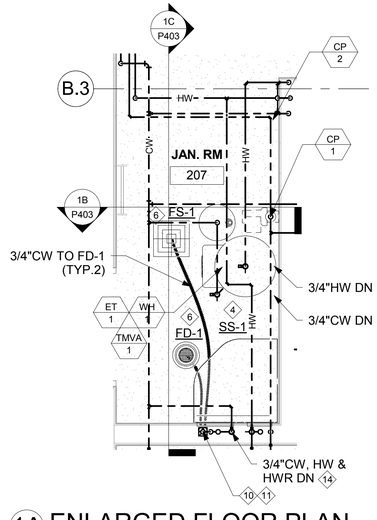

1A ENLARGED FLOOR PLAN

ENLARGED FLOOR PLAN

Scale: 1/2" = 1'0"

THE CITY OF LOS ANGELES OR ITS OFFICERS OR AGENTS SHALL NOT BE RESPONSIBLE FOR THE ACCURACY OR COMPLETENESS OF ELECTRONIC COPIES OF THIS PLAN

FILE PATH: C:\Revit Local File\16007.00 Studio City-Rec Center (Gym)\SCRC-Project Model_PLBG Local SWL-2019-07-29_R17.rvt

TTLB TEMPLATE REVISION DATE: 10/17/17
SHEET ISSUE

REVISION DATES (DESIGN STAGE)

BUREAU OF ENGINEERING
CITY OF LOS ANGELES
ENGINEERING

NO.	REVISION DESCRIPTION	DATE	BY

BUILDING -

INDEX RP-300106

Lic. No. 26903
Renewal: 9/30/21
MECHANICAL
OF CALIFORNIA

DEPARTMENT OF PUBLIC WORKS
CITY OF LOS ANGELES

TED ALLEN, PE
ARCHITECTURAL

ARCHITECT:	ARCHITEC	LIC. NO.:	LICENS
DESIGNED BY:	Designer		
DRAWN BY:	SC, RN		
CHECKED BY:	JS		
APPROVED BY:	MAHMOOD KARIMZADEH, AIA, DEPUTY CITY		

CITY					
DATE	26.APR.19	26.APR.19	26.APR.19	26.APR.19	26.APR.19

VERTICAL CONTROL:
HORIZONTAL

SHEET ENLARGED FLOOR PLANS

PROJECT STUDIO CITY RECREATION CENTER

ADDRESS 12621 RYE STREET, STUDIO CITY, CA 91604

BUREAU OF ENGINEERING
OFFICIAL RECORD

Project Status
PROJECT ISSUE DATE: 26.APR.19

WORK ORDER E170267B

PLAN FILE

DRAWING P403

SHEET 171 OF SHEET 211

PLOTTED:7/29/2019 5:03:14 PM

FIRST FLOOR WATER RISER DIAGRAMS - GYM BUILDING

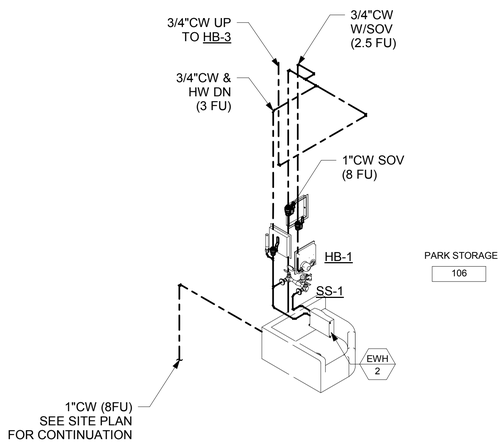

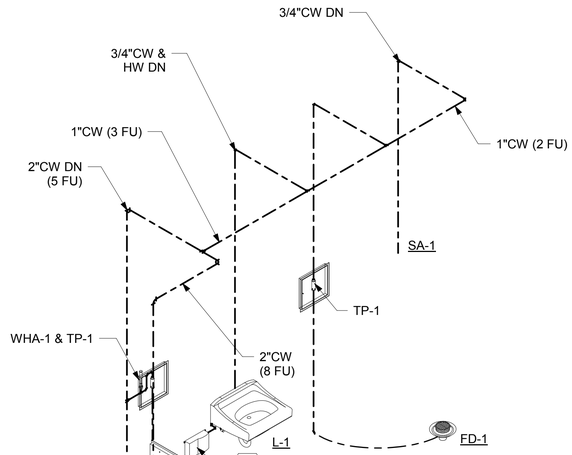

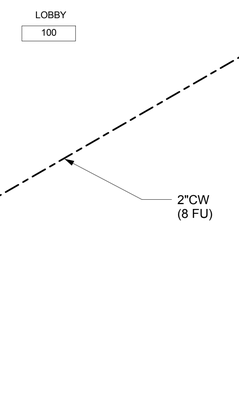

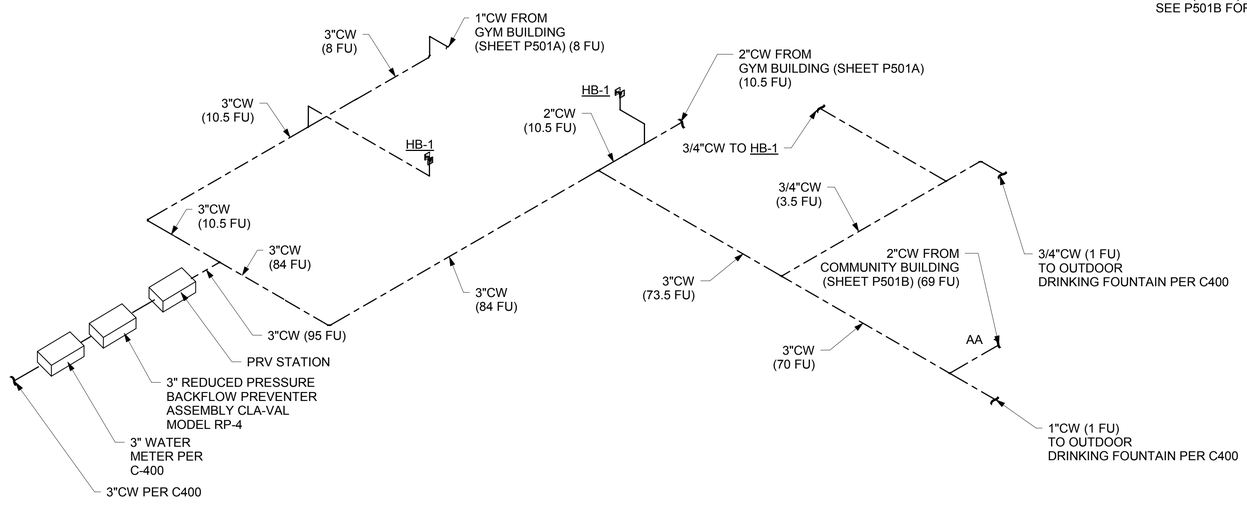

BUREAU OF ENGINEERING
OFFICIAL RECORD

Project Status
PROJECT ISSUE DATE: 26.APR.19

CITY OF LOS ANGELES
VERTICAL CONTROL:
HORIZONTAL

SHEET: COLD AND HOT WATER RISER DIAGRAMS_PART A
PROJECT: STUDIO CITY RECREATION CENTER
ADDRESS: 12621 RYE STREET, STUDIO CITY, CA 91604

WORK ORDER: E170267B
PLAN FILE:
DRAWING: P501A
SHEET 172 OF SHEET 211

DEPARTMENT OF PUBLIC WORKS
BUREAU OF ENGINEERING

ENGINEERING
CITY OF LOS ANGELES

NO.	REVISION DESCRIPTION	DATE	BY

BUILDING -
INDEX RP-300106

TED ALLEN, PE
ARCHITECTURAL
LIC. NO.: LICENS
ARCHITECT: ARCHITEC
DESIGNED BY: Designer
DRAWN BY: Author
CHECKED BY: Checker
APPROVED BY: MAHMOOD KARIMZADEH, AIA DEPUTY CITY

CITY
DATE
26.APR.19
26.APR.19
26.APR.19
26.APR.19
26.APR.19

THE CITY OF LOS ANGELES OR ITS OFFICERS OR AGENTS SHALL NOT BE RESPONSIBLE FOR THE ACCURACY OR COMPLETENESS OF ELECTRONIC COPIES OF THIS PLAN

FILE PATH: C:\Revit Local File\16007.00 Studio City-Rec Center (Gym)\SCRC-Project Model_PLBG Local SWL-2019-07-29_R17.rvt

TTLB TEMPLATE REVISION DATE: 10/11/18
SHEET ISSUE

REVISION DATES / DESIGN STAGE

PLOTTED:7/29/2019 5:03:17 PM

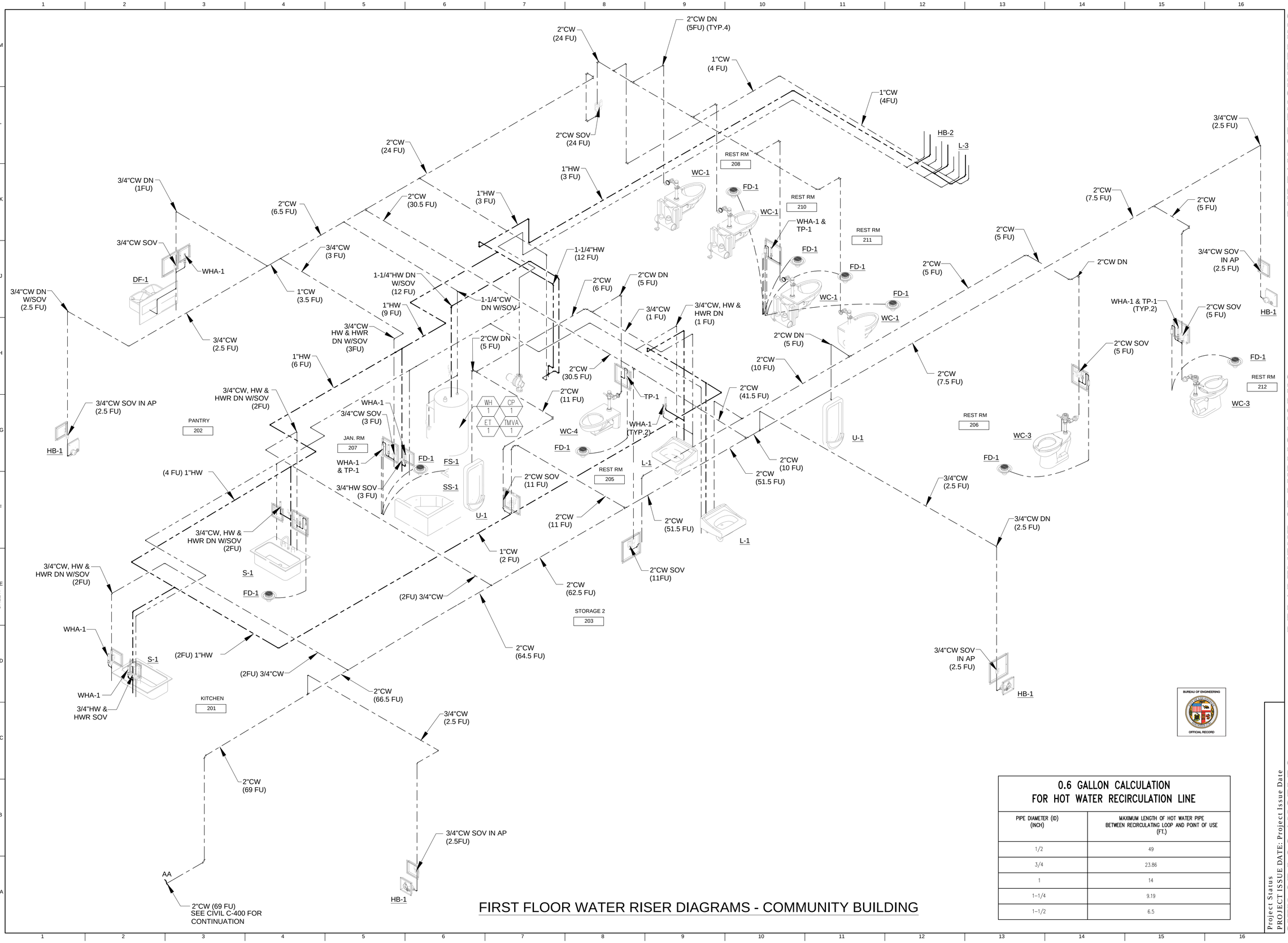

FIRST FLOOR WATER RISER DIAGRAMS - COMMUNITY BUILDING

0.6 GALLON CALCULATION FOR HOT WATER RECIRCULATION LINE

PIPE DIAMETER (ID) (INCH)	MAXIMUM LENGTH OF HOT WATER PIPE BETWEEN RECIRCULATING LOOP AND POINT OF USE (FT.)
1/2	49
3/4	23.86
1	14
1-1/4	9.19
1-1/2	6.5

BUREAU OF ENGINEERING OFFICIAL RECORD

BUREAU OF ENGINEERING

ENGINEERING CITY OF LOS ANGELES

NO.	REVISION DESCRIPTION	DATE	BY

INDEX | RP-300106 | BUILDING -

REGISTERED PROFESSIONAL ENGINEER JAMES H. SHWE No. 26903 Renewal: 9/30/20 MECHANICAL STATE OF CALIFORNIA

DEPARTMENT OF PUBLIC WORKS

CITY OF LOS ANGELES

TED ALLEN, PE

	CITY
DATE	26.APR.19
ARCHITECTURAL	26.APR.19
ARCHITECT/ENGINEER : JAMES H SHWE LIC. NO. : M 26903	26.APR.19
DESIGNED BY: JS	26.APR.19
DRAWN BY: SC, RN	26.APR.19
CHECKED BY: JS	26.APR.19
APPROVED BY: MAHMOOD KARIMZADEH, AIA, DEPUTY CITY ENGINEER	

SHEET 12621 RYE STREET, STUDIO CITY, CA 91604

PROJECT STUDIO CITY GYMNASIUM

ADDRESS COLD & HOT WATER RISER DIAGRAMS - PART B

VERTICAL CONTROL:

HORIZONTAL

WORK ORDER E170267B

PLAN FILE

DRAWING P501B

SHEET 173 OF SHEET 211

16007.STUDIO CITY REC CENTER\07-29-2019

Project Status

PROJECT ISSUE DATE: Project Issue Date

TTLB TEMPLATE REVISION DATE:

SHEET ISSUE DATE:

FILE PATH:

REVISION DATES (DESIGN STAGE)

THE CITY OF LOS ANGELES OR ITS OFFICERS OR AGENTS SHALL NOT BE RESPONSIBLE FOR THE ACCURACY OR COMPLETENESS OF ELECTRONIC COPIES OF THIS PLAN SHEET:

THE CITY OF LOS ANGELES OR ITS OFFICERS OR AGENTS SHALL NOT BE RESPONSIBLE FOR THE ACCURACY OR COMPLETENESS OF ELECTRONIC COPIES OF THIS PLAN

FILE PATH: C:\Revit Local File\16007.00 Studio City-Rec Center (Gym)\SCRC-Project Model_PLBG Local SWL-2019-07-29_R17.rvt

TTLB TEMPLATE REVISION DATE: 10/16/17
SHEET ISSUE

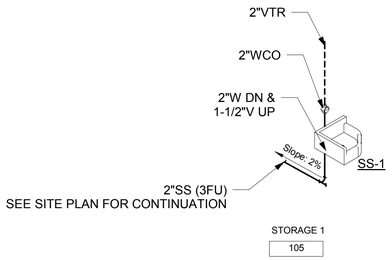

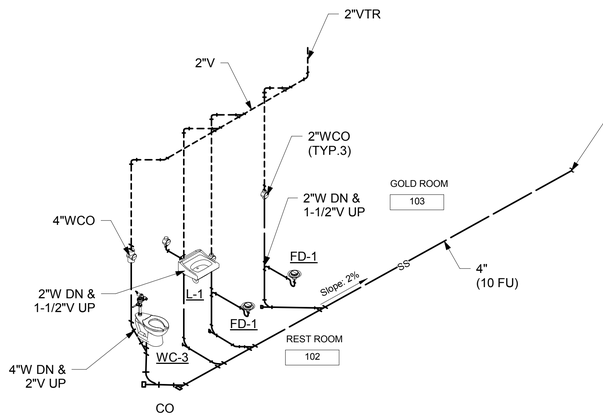

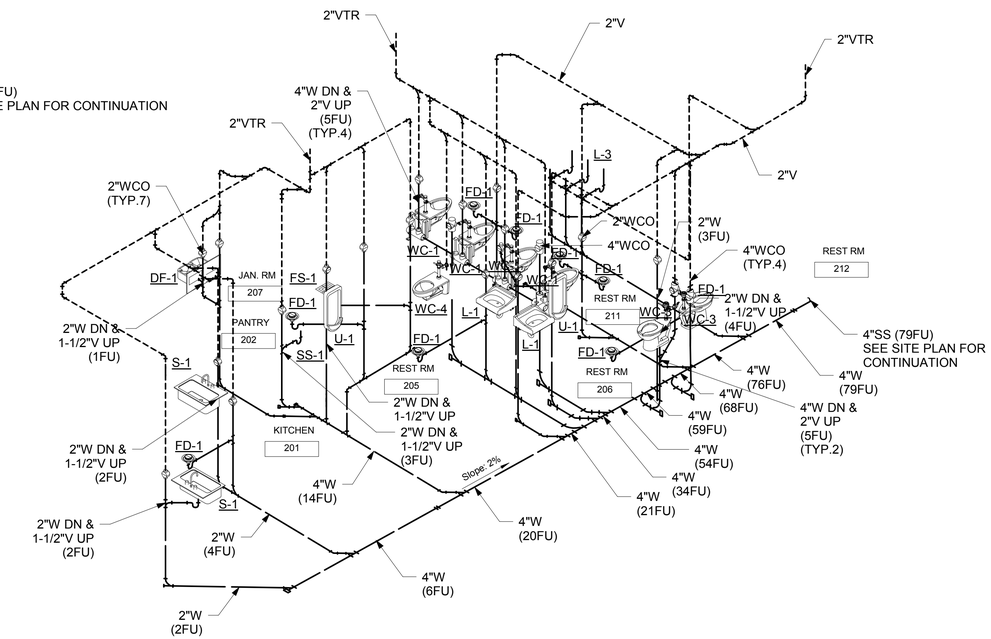

FIRST FLOOR WASTE RISER DIAGRAMS

REVISION DATES (DESIGN STAGE)

BUREAU OF ENGINEERING
OFFICIAL RECORD

Project Status
PROJECT ISSUE DATE: 26.APR.19

CITY OF LOS ANGELES
DEPARTMENT OF PUBLIC WORKS
BUREAU OF ENGINEERING

ENGINEERING
CITY OF LOS ANGELES

NO.	REVISION DESCRIPTION	DATE	BY

BUILDING -

INDEX **RP-300106**

TED ALLEN, PE
ARCHITECTURAL
ARCHITECT: ARCHITEC LIC. NO.: LICENS
DESIGNED BY: Designer
DRAWN BY: SC, RN
CHECKED BY: JS
APPROVED BY: MAHMOOD KARIMZADEH, AIA DEPUTY CITY

CITY	DATE
	26.APR.19
	26.APR.19
	26.APR.19
	26.APR.19
	26.APR.19

VERTICAL CONTROL:
HORIZONTAL

SHEET WASTE AND VENT RISER DIAGRAMS

PROJECT STUDIO CITY RECREATION CENTER

ADDRESS 12621 RYE STREET, STUDIO CITY, CA 91604

WORK ORDER
E170267B

PLAN FILE

DRAWING
P502

SHEET 174 OF SHEET 211

PLOTTED:7/29/2019 5:03:19 PM

NOTES:

1. HWR BALANCING VALVES SHALL BE ADJUSTED TO MAINTAIN 5°F TEMPERATURE DIFFERENCE BETWEEN HW SUPPLY AND RETURN AND TO MAINTAIN 110°F AT EACH POINT OF RETURN.
2. PROVIDE AND INSTALL 1" T&P RELIEF PIPING FROM CONNECTION TO T&P VALVE ACROSS ROOM (WALL MOUNTED), THROUGH WALL TO POINT OF DISCHARGE AT EXTERIOR OF BUILDING. SUCH PIPING SHALL BE INSTALLED AT A MINIMUM 1/4" PER FOOT SLOPE, AND SHALL DISCHARGE AT EXTERIOR WITH AN ELBOW DIRECTED TOWARDS GRADE. POINT OF DISCHARGE SHALL BE BETWEEN 6"–12" ABOVE GRADE.
3. *PROVIDE EXHAUST AND INTAKE AS INDICATED ON DETAIL. PROVIDE SUCH SYSTEMS FROM WATER HEATER LOCATION UP THROUGH ROOF.*

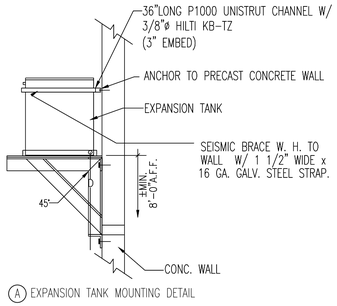

A EXPANSION TANK MOUNTING DETAIL

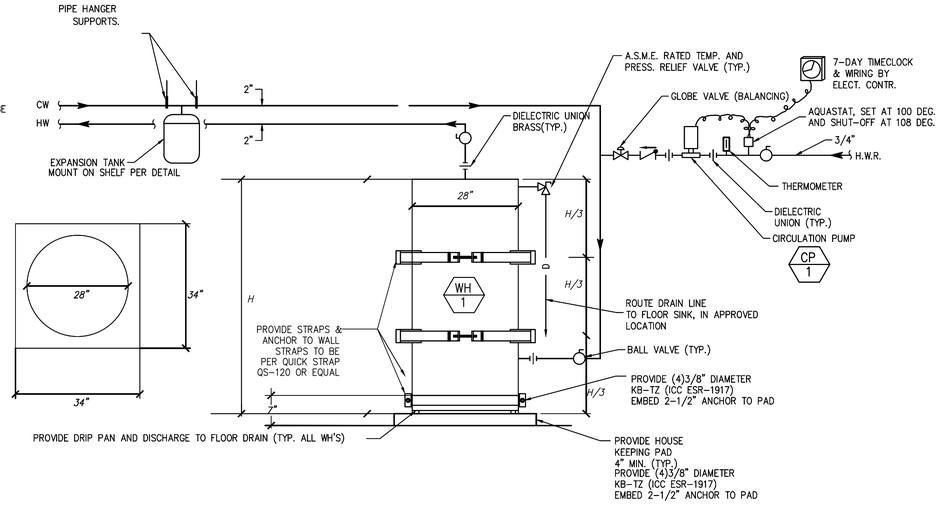

ELECTRIC WATER HEATER

SCALE NOT TO SCALE 3

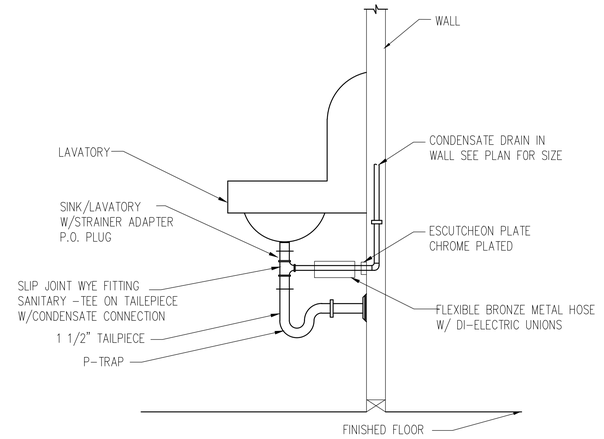

CONDENSATE DRAIN CONNECT TO FIXTURE TAILPIECE

SCALE NOT TO SCALE 1

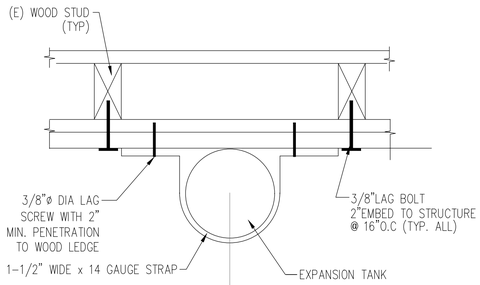

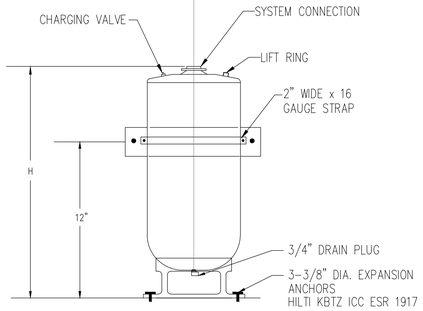

SYMBOL	H	DIA	WT. (LB)
ET-1	16"	12"	110

EXPANSION TANK SEISMIC STRAP DETAILS

SCALE NOT TO SCALE 5

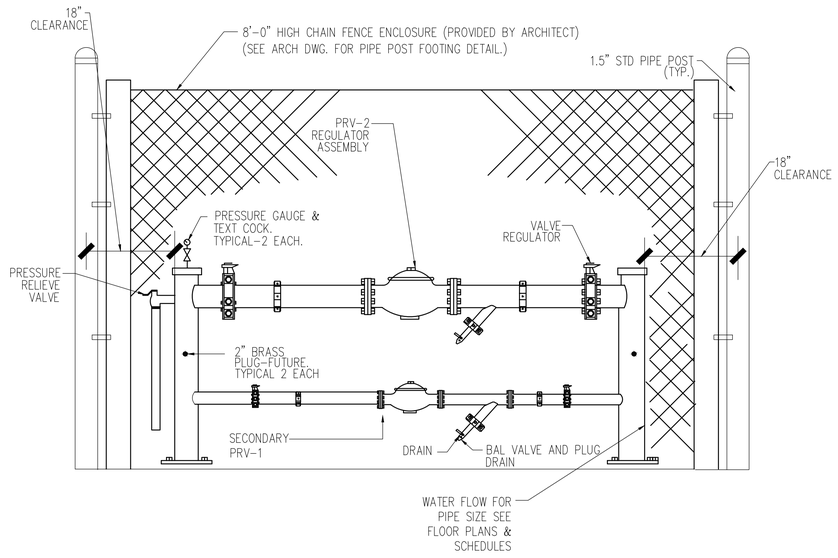

NOTES:
1. ALLOW 4 PSI DIFFERENCE IN THE REGULATOR SETTINGS WITH THE SMALLEST REGULATOR TO BE WITH THE HIGHEST SETTING.
2. PROVIDE 8'-0" HEIGHT CHAIN LINK FENCE AND 18" CLEARANCE ALL AROUND ASSEMBLY VALVES & PIPES.

PRESSURE REDUCING VALVE ASSEMBLY (DOMESTIC WATER)

SCALE NOT TO SCALE 4

Indoor Unit Drain Piping

- Drain piping must have down slope (1/32 to 1/64 inch). To prevent reversal flow, do not provide up and down slope.
- During drain piping connection, do not exert extra force on the drain port on the indoor unit.
- The outside diameter of the drain connection on the indoor unit is 1-1/4 inch.
- The piping material is polyvinyl chloride pipe (1 inch)
- Install heat insulation on the drain piping
- The heat insulation material is polyethylene foam thicker than 5/16 inch.

Drain Test

The indoor unit uses a drain pump to drain water. Use the following procedure to test the drain pump operation.

Figure 173: Drain Test

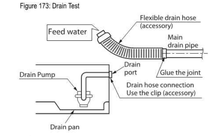

CAUTION
The supplied flexible drain hose should not be strained. A strained hose may cause water to leak.

Figure 172: Drain Piping

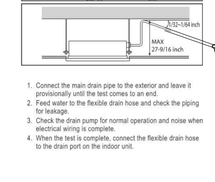

4-Way Ceiling Cassettes

1. Connect the main drain pipe to the exterior and leave it provisionally until the test comes to an end.
2. Feed water to the flexible drain hose and check the piping for leakage.
3. Check the drain pump for normal operation and noise when electrical wiring is complete.
4. When the test is complete, connect the flexible drain hose to the drain port on the indoor unit.

3/4"CD CONNECTED TO 1"CD MAIN PIPE IN THE CEILING SHALL BE INSULLATED.

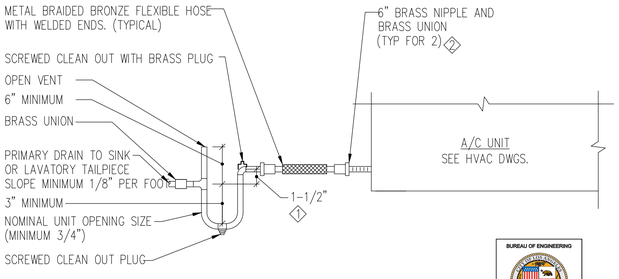

BUREAU OF ENGINEERING OFFICIAL RECORD

KEY NOTE:

1. TWICE THE NEGATIVE STATIC PRESSURE UNDER NOMINAL UNIT OPERATION. ROOF TOP UNIT NEGATIVE STATIC PRESSURE = 0.75 FAN COIL UNIT NEGATIVE STATIC PRESSURE < 0.75
2. PROVIDE DIELECTRIC UNION, WHERE STEEL MEET COPPER.
3. A-HIGH CONDENSATE LEVEL FLOAT SWITCH IS PROVIDED BY HVAC FOR UNIT SHUT DOWN. BOTTOM OF HVAC UNIT SHALL BE MINIMUM 12" ABOVE CEILING FOR CONDENSATE PIPING INSULATE CONDENSATE AND OVERFLOW DRAIN PIPING INSIDE BUILDING. (APPLY ONLY FOR INDOOR UNIT) B-DEPTH OF SEAL TO OVERCOME OPERATING STATIC PRESSURE OR SHALL BE UNIT PRESSURE +1" (VERIFY IN FIELD). BUT NOT LESS THAN 3" MIN.
4. ALL CONDESATE DRAIN AND EMERGENCY DRAIN PIPE ABOVE CEILING
5. PROVIDE BRASS UNIONS FOR TRAP REMOVAL
6. CONNECT CONDESATE DRAIN TO LAVATORY TAIL PIECE OR DISCHARGE INTO A FLOOR SINK, SERVICE SINK OR ROOF RECEPTICLE.

CONDENSATE DRAIN TRAP DETAIL

SCALE NOT TO SCALE 2

BUREAU OF ENGINEERING
ENGINEERING
CITY OF LOS ANGELES

NO.	REVISION DESCRIPTION	DATE	BY
INDEX			BUILDING -

RP-300106

REGISTERED PROFESSIONAL ENGINEER JAMES H. SHIWE No. 26903 Renewal: 9/30/20 MECHANICAL STATE OF CALIFORNIA

DEPARTMENT OF PUBLIC WORKS
CITY OF LOS ANGELES

TED ALLEN, PE

ARCHITECT	
ENGINEER - JAMES H SHIWE	LIC. NO.: M 26903
DESIGNED BY:	JS
DRAWN BY:	SC, RN
CHECKED BY:	JS
APPROVED BY:	MAHMOOD KARIMZADEH, AIA, DEPUTY CITY ENGINEER

	CITY	DATE
		26.APR.19
		26.APR.19
		26.APR.19
		26.APR.19
		26.APR.19

VERTICAL CONTROL:
HORIZONTAL

SHEET: DETAILS

PROJECT: STUDIO CITY GYMNASIUM

ADDRESS: 12621 RYE STREET, STUDIO CITY, CA 91604

WORK ORDER E170267B

PLAN FILE

DRAWING P601

SHEET 175 OF SHEET 211

Project Status
PROJECT ISSUE DATE: Project Issue Date

THE CITY OF LOS ANGELES OR ITS OFFICERS OR AGENTS SHALL NOT BE RESPONSIBLE FOR THE ACCURACY OR COMPLETENESS OF ELECTRONIC COPIES OF THIS PLAN

TTLB TEMPLATE REVISION DATE:
SHEET ISSUE DATE:
REVISION DATES (DESIGN STAGE)
FILE PATH:

16007/STUDIO CITY REC CENTER/07-29-2019

Load Calculation for new Electrical Service at the 12621 Rye St. Studio City, CA 91604
New Studio City Recreation Center consisting of a Gymnasium and Community Building

Gymnasium: Area is 9,600 SF

1. General lighting 8,880 sf x 2w/sf	=	17,760w
2. General receptacles: 8,880 sf x 1w/sf	=	8,880w

Community Building: Area is 1,973 SF

1. General lighting 1,973 sf x 2w/sf	=	3,946w
2. General receptacles: 1,973 sf x 1w/sf	=	1,973w

Exterior Lighting

1. Parking and Security lighting (Est)	=	10,000w
2. Athletic Field Lighting, existing	=	46,800w
Sub Total Exterior Lighting	**=**	**56,800w**
Sub Total General Lighting, Power	**=**	**89,359w**

Mechanical HVAC equipment

a. Heat pump: 2 x 56A = 112A @ 208v, 3Ø =	=	40,320w
b. Heat Recovery Unit: 1 x 58A @ 208V, 3Ø =	=	20,880w
c. AH Units : 2 x 41A = 48A @ 208v, 3Ø =	=	29,500w
d. CU Units: 2 x 18A = 36A @ 208v, 1Ø =	=	7,488w
e. Miscellaneous equipment (FCU, small EF, etc.)	=	8,000w
Sub-total Mechanical HVAC equipment:	**=**	**106,188w**

Electrical Vehicle Chargers (EVC) 12 x 32A=384A @ 208v, 1Ø **= 79,872w**

Total new service: =275, 419w

Future Load / spare capacity 20% **= 55,084w**
Total required for the new Electrical Service **=330,503w**
330,503w @ 120/208v, 3Ø, 4W = 918 Amp

Required service: 1200 Amp, 120/208v, 3Ø, 4W

Meter #1 : Gym and Community Center Building : 500AMP Main CB

Meter #2 : Exterior Lighting and Field Lighting : 400AMP Main CB

Meter #3 : Electrical Vehicle Chargers : 300AMP Main CB

P.V. SYSTEM COMPONENTS

PROVIDE A DESIGN-BUILT FULLY ENGINEERED AND PERMITTED PHOTOVOLTAIC SYSTEMS WITH ALL THE COMPONENTS FOR A COMPLETE AND FULLY OPERABLE P.V. SYSTEM. COMPLY WITH CEC 2016, ART 690

BASIC COMPONENTS OF GRID-CONNECTED PV SYSTEMS WITHOUT BATTERIES ARE:

- SOLAR PHOTOVOLTAIC MODULES
- ARRAY MOUNTING RACKS
- GROUNDING EQUIPMENT
- COMBINER BOX
- SURGE PROTECTION (OFTEN PART OF THE COMBINER BOX)
- INVERTER
- METERS – SYSTEM METER AND KILOWATT-HOUR METER
- DISCONNECTS:
  - ARRAY DC DISCONNECT
  - INVERTER DC DISCONNECT
  - INVERTER AC DISCONNECT
  - EXTERIOR AC DISCONNECT
  - RAPID SHUT DOWN DISCONNECT

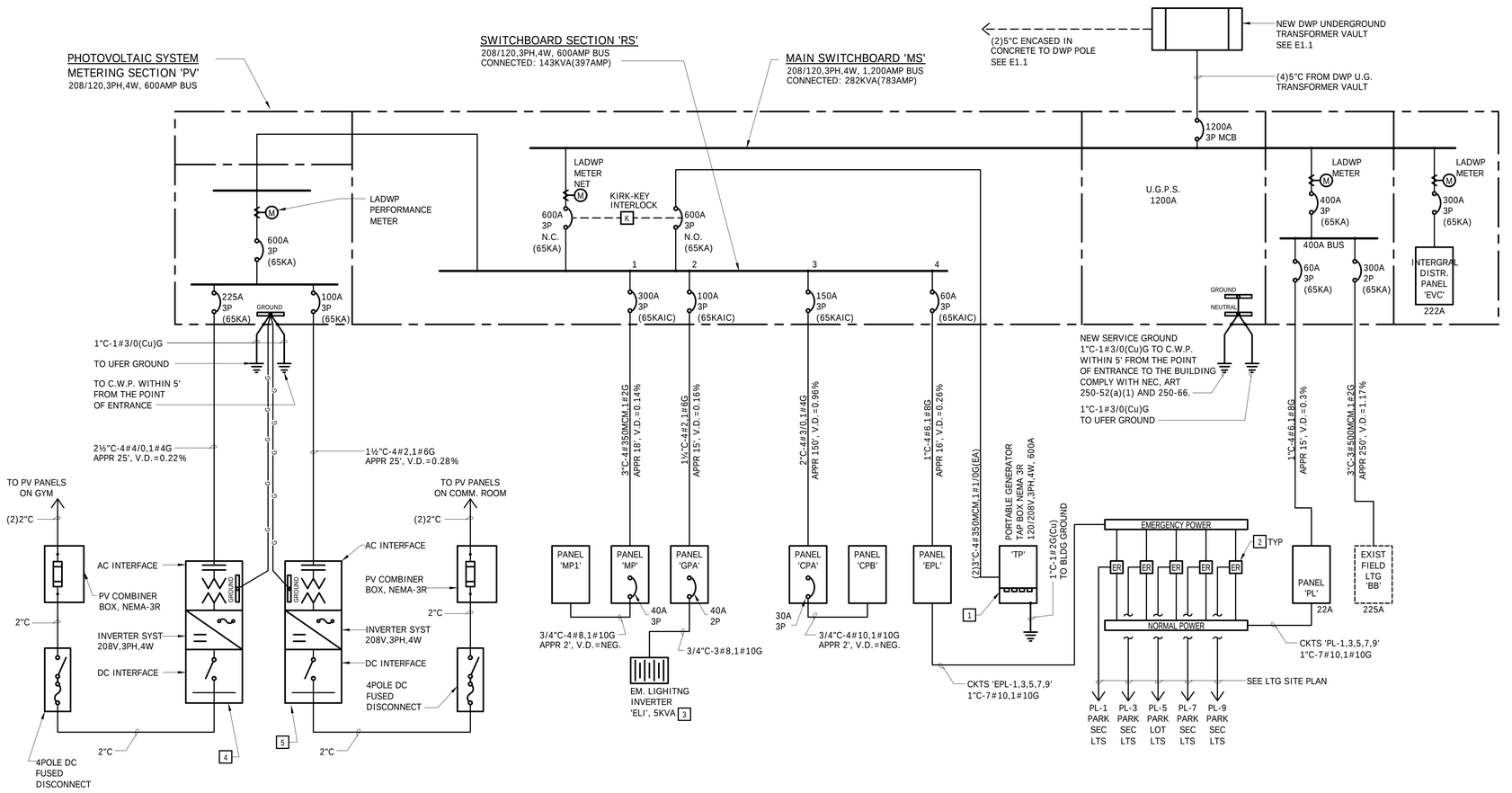

ONE LINE DIAGRAM

SCALE: NTS

SERIES RATED NOTES:

1. BRACE SWITCHBOARD MIN. 65KA.
2. BRANCH MAIN AND FEEDER CIRCUIT BREAKER SHALL BE U.L. LISTED AS SERIES COMPONENTS FOR MIN 65KA(65KA/10KA)
3. ALL SERIES RATED EQUIPMENT SHALL HAVE A LABEL IDENTIFYING SERIES COMPONENTS, AND SHALL BE FACTORY MARKED 'CAUTION-SERIES COMBINATION SYSTEM RATED, 65,000 AMPS. AVAILABLE. IDENTIFIED REPLACEMENT COMPONENTS REQUIRED!'.
4. ALL CIRCUIT BREAKERS TYPE FOR SERIES RATINGS SHALL BE EATON.
5. FEEDER CIRCUIT BREAKER SHALL BE EATON TYPE 'FD', 65KA. ALL BRANCH CIRCUIT BREAKERS IN BRANCH PANEL BOARDS SHALL BE SERIES RATED COMPATIBLE EATON TYPE 'BAB' U.N.O.
6. ELECTRICAL CONTRACTOR SHALL SUBMIT TO THE ELECTRICAL ENGINEER A COPY OF DOCUMENTATION FROM SWITCHGEAR MANUFACTURER THAT HE INTENDS TO USE, TO DEMONSTRATE THE COMPLIANCE OF THE SUBMITTED COMBINATION AS SERIES SYSTEM RATED.

GENERAL NOTES FOR ONE LINE DIAGRAM:

1. ALL CONDUCTORS SHALL BE COPPER, THHN/THWN TYPE, RATED 75°C, 600V.
2. ALL TERMINAL LUGS ON ELECTRICAL EQUIPMENT AND CIRCUIT BREAKERS SHALL BE RATED FOR USE WITH 75°C WIRES.
3. ALL ELECTRICAL EQUIPMENT SHALL BE UL LISTED, OR LISTED BY CITY OF L.A. RECOGNIZED TESTING FACILITY OR APPROVED BY THE DEPARTMENT.
4. ELECTRICAL INSTALLATION SHALL BE IN ACCORDANCE WITH ANSI/NECA ELECTRICAL INSTALLATION STANDARDS.
5. FUSES SHALL BE PROVIDED WITH REJECTION TYPE FUSE HOLDERS.
6. NO PIPING, DUCTS OR EQUIPMENT FOREIGN TO ELECTRICAL EQUIPMENT SHALL BE PERMITTED TO BE LOCATED WITHIN THE DEDICATED SPACE ABOVE THE ELECTRICAL EQUIPMENT.
7. ELECTRICAL TESTING SHALL BE IN ACCORDANCE WITH NETA ELECTRICAL TESTING RECOMMENDATIONS.
8. ALL ELECTRICAL DESIGN, INSTALLATION AND EQUIPMENT SHALL CONFORM TO THE REQUIREMENTS OF CALIFORNIA ELECTRICAL CODE, 2016 EDITION.
9. FIELD MARK ALL ELECTRICAL EQUIPMENT THAT ARE LIKELY TO REQUIRE EXAMINATION SERVICING WHILE ENERGIZED, WITH A SIGN TO WARN QUALIFIED PERSONS OF POTENTIAL ELECTRIC ARC FLASH HAZARD. COMPLY WITH CEC 2016 ART 110.16.
10. BRACE SWBD 'MS' FOR 65,000A

LOAD SCHEDULE: 'RS' (208/120, 450A MCB)

CONNECTION			FEEDER LOAD	
FEEDER NO	FROM	TERM	CONNECT KVA	FEEDER AMP
1 (1)	'RS'	'MP'	92	255
2 (1)	'RS'	'GPA'	21	58
3 (1)	'RS'	'CPA'	25	69
4 (1)	'RS'	'EPL'	5	14
TOTAL:			143	397A

NOTES:
(1) PROVIDE CTS FOR EACH FEEDER

SPECIFIC NOTES:

1. PROVIDE PORTABLE GENERATOR TAP BOX. ASCO#3QC-CAA-2-0800-F-00-F, OR APPROVED EQUAL.
2. EMERGENCY LIGHTING TRANSFER RELAY 'ER', U.L. 924 LISTED. HUBBELL: PRU-1-120V, OR EQUAL BY WATTSTOPPER: ELCU-200.
3. PROVIDE NEW CENTRAL EMERGENCY LIGHTING INVERTER, MYERS POWER PRODUCT #3-E-5-S-BA-2012-A-S-Z-2YW, MINIMUM 90 MINUTES RUNNING TIME.
4. P.V. INVERTER RECTIFIER, 75KW, 600VDC INPUT, OUTPUT 240VAC, 3PHASE. UL LISTED. BUILT-IN INPUT(DC) AND OUTPUT(AC) FULLY INTEGRATED DISCONNECT SWITCHES. YASKAWA COMPANY, SOLECTRIA #PVI-75, OR APPROVED EQUAL.
5. P.V. INVERTER RECTIFIER, 30KW, 600VDC INPUT, OUTPUT 240VAC, 3PHASE. UL LISTED. BUILT-IN INPUT(DC) AND OUTPUT(AC) FULLY INTEGRATED DISCONNECT SWITCHES. YASKAWA COMPANY, SOLECTRIA #PVI-30, OR APPROVED EQUAL.

BUREAU OF ENGINEERING
OFFICIAL RECORD

REGISTERED PROFESSIONAL ENGINEER
No. 012941
Exp. 3-31-21
ELECTRICAL
STATE OF CALIFORNIA

SILVER,ROTH & ASSOCIATES INC.
CONSULTING ELECTRICAL ENGINEERS
5 1 1 SOUTH FAIRFAX AVENUE
LOS ANGELES, CALIFORNIA, 90036-3130
TEL: (323) 933-3700 / FAX: (323) 933-3874
EMAIL: sra@silverroth.com

Project Status
PROJECT ISSUE DATE: 26.APR.19

CITY OF LOS ANGELES
VERTICAL CONTROL:
HORIZONTAL
SHEET NOTES, ONE LINE DIAGRAM AND LOAD CALCULATIONS
PROJECT STUDIO CITY
ADDRESS 12621 RYE STREET, STUDIO CITY, CA 91604

WORK ORDER E170267B
PLAN FILE
DRAWING E0.1
SHEET 176 OF SHEET 211

DEPARTMENT OF PUBLIC WORKS
CITY OF LOS ANGELES
ENGINEERING
BUREAU OF ENGINEERING
CITY OF LOS ANGELES

NO.	REVISION DESCRIPTION	DATE	BY

BUILDING -
INDEX RP-300106

CITY
DATE 26.APR.19
LIC. NO.: 012941
ARCHITECTURAL DIVISION
ARCHITECT/ ENGINEER: SILVER, ROTH & ASSOC.
DESIGNED FR
DRAWN FR
CHECKED FR
APPROVED BY: MAHMOOD KARIMZADEH, AIA, DEPUTY DIVISION MANAGER

TED ALLEN, PE

THE CITY OF LOS ANGELES OR ITS OFFICERS OR AGENTS SHALL NOT BE RESPONSIBLE FOR THE ACCURACY OR COMPLETENESS OF ELECTRONIC COPIES OF THIS PLAN

FILE PATH: C:\Users\Daniel\Documents\SCRC-Project Model_ELEC_SilverRoth.rvt
TTLB TEMPLATE REVISION DATE: 05/22/17
SHEET ISSUE
REVISION DATES (DESIGN STAGE)

PLOTTED:6/12/2019 3:12:14 PM

SYMBOL SCHEDULE

ALL SYMBOLS SHOWN ARE NOT NECESSARILY USED ON DRAWINGS

—PA—	3/4"C, PUBLIC ADDRESS (PA) CONDUIT W/ PULLCORD. U.N.O.
—TV—	3/4"C, TELEVISION CONDUIT W/ PULLCORD. U.N.O.
—FA—	3/4"C-4#14, FIRE ALARM SYSTEM CONDUIT AND WIRE. U.N.O
— D —	3/4"C, DATA CONDUIT W/ CABLE. U.N.O.
— G —	3/4"C-1#12G U.N.O.
—CAM—	3/4"C/P.C. SECURITY CAMERA, U.N.O
—MON—	3/4"C/P.C. SECURITY MONITOR, U.N.O.
—KP—	3/4"C/P.C. SECURITY KEY PAD, U.N.O.
	1#12 GROUND WIRE - 3/4" CONDUIT, U.N.O.
	1#12 GROUND WIRE AND 1#12 ISOLATED GROUND WIRE, U.N.O.
	HOME RUN. U.N.O.
	CONDUIT CONCEALED IN WALL OR CEILING. U.N.O.
- - - - -	CONDUIT CONCEALED IN FLOOR, UNDERGROUND, OR UNDER FLOOR. U.N.O.

	2#12,1#12G W - 3/4" CONDUIT		6#12,1#12G W - 3/4" CONDUIT
	3#12,1#12G W - 3/4" CONDUIT		7#12,1#12G W - 3/4" CONDUIT
	4#12,1#12G W - 3/4" CONDUIT		8#12,1#12G W - 1" CONDUIT
	5#12,1#12G W - 3/4" CONDUIT		9#12,1#12G W - 1" CONDUIT
○	CONDUIT UP	UNO	UNLESS NOTED OTHERWISE
∘	CONDUIT DOWN	VL	VERIFY LOCATION
AFF	ABOVE FINISHED FLOOR	WP	WEATHER PROOF
AL	ALUMINUM CONDUCTORS	E	EXISTING TO REMAIN
℄	CENTER LINE	ER	EXISTING TO BE RELOCATED
CO	CONDUIT ONLY	P.C.	PULL CORD
CU	COPPER CONDUCTORS	C.W.P.	COLD WATER PIPE
NTS	NOT TO SCALE	PV	PHOTOVOLTAIC

FLOOR	WALL	CEILING	DESCRIPTION
		○	RECESSED LIGHT FIXTURE AND OUTLET
			FLUORESCENT LIGHT FIXTURE AND OUTLET - SURFACE
			FLUORESCENT RECESSED LIGHT FIXTURE AND OUTLET
○			EMERGENCY FIXTURE
		⊗	EXIT LIGHT FIXTURE AND OUTLET
	^{K} $_{ab}$		SINGLE POLE TOGGLE SWITCH, +4'-0" U.N.O. SUBSCRIPT = OUTLETS CONTROLLED PROVIDE SW FOR EACH IN GANG ASSEMBLY, K=KEY SWITCH
	$_{2}$		TWO POLE SWITCH, +4'-0" U.N.O.
	$_{OS}$		SWITCH, +4'-0" U.N.O., OS = OCCUPANCY SENSOR
			DUPLEX RECEPTACLE, +18" TO ℄ U.N.O.
			FLOOR DUPLEX RECEPTACLE, FLUSH MOUNTED
			DOUBLE DUPLEX RECEPTACLE, +18" TO ℄ U.N.O.
			DUPLEX RECEPTACLE, MOUNTED ABOVE COUNTERTOP
			DUPLEX RECEPTACLE ON EMERGENCY CIRCUIT, +18" TO ℄ UNO
			DOUBLE DUPLEX RECEPT. ON EMERG. CKT, +18" TO ℄ U.N.O.
			SPECIAL RECEPTACLE AS NOTED, +18" TO ℄ U.N.O.
			SINGLE RECEPTACLE, +18" TO ℄ U.N.O.
			JUNCTION BOX
			TELEPHONE OUTLET, +18" TO ℄ U.N.O.
			INTERCOM OUTLET, +18" TO ℄ U.N.O.
			DATA/TEL. OUTLET, 18" TO ℄ U.N.O.
			CLOCK OUTLET AND CLOCK
			SPEAKER
			AREA SPEAKER VOLUME CONTROL
			MICROPHONE OUTLET
			THERMOSTAT
			MOTOR
			DISTRIBUTION SWITCHBOARD
			PANELBOARD
			TERMINAL CABINET
			DISCONNECT SWITCH, UNFUSED U.N.O.
			DOUBLE THROW SWITCH, UNFUSED, U.N.O.
			MOTOR CONTROLLER, NO. INDICATES SIZE
			COMBINATION MOTOR CONTROLLER AND DISCONNECT SWITCH
			TELEVISION OUTLET, +18" TO ℄ U.N.O.
			CONTROL TRANSFORMER
			PUSH BUTTON
			MAGNETIC DOOR RELEASE/HOLDER
			COMBINATION SMOKE FIRE DAMPER (CSFD)
			SECURITY CAMERA, MTG HEIGHT TO BE COORDINATED W/I.T. DEPARTMENT
			UTILITY METER
			EMERGENCY LIGHTING TRANSFER RELAY
			GROUND TERMINAL
			OCCUPANCY SENSOR, WALL MTD @ +4'-0", U.N.O.
			DAYLIT SENSOR

LIGHTING FIXTURE SCHEDULE

TYPE	MOUNTING: RECESSED	MOUNTING: SURFACE	MOUNTING: PENDANT	LAMPS: NUMBER	LAMPS: WATTAGE	LAMPS: TYPE	LOAD	MANUFACTURER	CATALOG NO.	REMARKS
A	.	.	X	1	202	LED	202	HUBBELL LTG	LBX2-HO-U-4K-A2-CD1--WH-WA22-C/HPL/WG23A	GYM
B	.	.	X	1	154	LED	154	HUBBELL LTG	SAV-ML-35-8-WA22-N-120-WW-C/HPL	LOBBY
C1E	.	.	X	1	80	LED	80	PRULITE	BIO2-LIN-LED27-S0-8-TMW-SAL-D1/CW-SC-UNV-CA48"-DM10-EMH	(1) 8' LINEAR, EM.COMM.RM.
C1	.	.	X	1	80	LED	80	PRULITE	BIO2-LIN-LED27-S0-8-TMW-SAL-D1/CW-SC-UNV-CA48"-DM10	8' LINEAR, COMM RM, OFFICE
C2	.	.	X	1	60	LED	60	PRULITE	BIO2-LIN-LED27-S0-6-TMW-SAL-D1/CW-SC-UNV-CA48"-DM10	6' LINEAR, OFFICE
D	X	.	.	1	14	LED	14	CONTECH LTG	R6NC-2-27K-12-D(0-10V)	DOWNLIGHTS, R.R.
E	.	X	.	1	23	LED	23	COLUMBIA LTG	LAW-4-35-LW-ED-U	B.O.H. SPACES
F	.	X	.	1	48	LED	48	COLUMBIA LTG	LAW-4-35-ML-ED-U	KITCHEN
G	.	X	.	1	182	LED	182	KIM LIGHTING	(4) ARX16-3-4K-60-UV-(3)-ST-A30-FGL-NFO-SCH	SITE POLE LTG
G1	.	X	.	1	124	LED	124	KIM LIGHTING	(4) ARX16-3-4K-40-UV-(3)-3ST-A30-FGL-NFO-SCH	SITE POLE LTG
G POLE	.	.	.	P	O	L	E	KIM LIGHTING	PTRS20-61120 (3)	20' POLE (4)
G1 POLE	.	.	.	P	O	L	E	KIM LIGHTING	LTRA16-6156 (3)	16' POLE (4)
H	.	1	.	1	65	LED	65	KIM LIGHTING	WD14D-3-E35-60L-4K-120-DB-A30-L2-SCM140	EXTERIOR LIGHT
.	.	.	.	.	.	.	.	.	.	.
EX	.	X	.	1	2	LED	2	EVENLITE	TLX-EM-GU-W	(1) EXIT LIGHT
EX	.	.	.	1	2	LED	2	EVENLITE	TLX-AC-GU-W-M990010 (2)	(5) .

NOTES:

(1) EMERGENCY BATTERY, MIN. 90 MINUTES OPERATING TIME.
(2) PROVIDE WIRE GUARD OPTION IN GYM ONLY
(3) VERIFY COLOR WITH ARCHITECT
(4) FOR ALL CONFIGURATIONS REFER TO SITE LIGHTING
(5) EXIT SIGN POWER BY ELI CENTRAL INVERTER. MIN 90 MINUTES OPERATING TIME

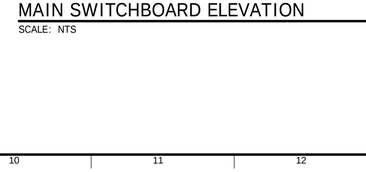

TYPICAL SIGNAL TERMINAL CABINET ELEVATION

B
-

SCALE: NTS

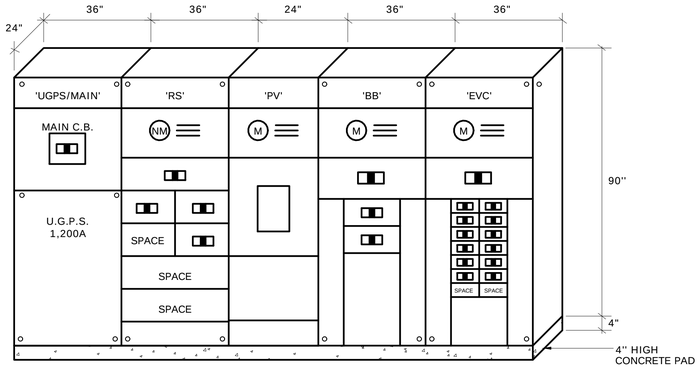

MAIN SWITCHBOARD ELEVATION

A
-

SCALE: NTS

BUREAU OF ENGINEERING
OFFICIAL RECORD

REGISTERED PROFESSIONAL ENGINEER
ELI X. ROTH III
No. 012941
Exp. 3-31-21
ELECTRICAL
STATE OF CALIFORNIA

SILVER,ROTH & ASSOCIATES INC.
CONSULTING ELECTRICAL ENGINEERS
5 1 1 SOUTH FAIRFAX AVENUE
LOS ANGELES, CALIFORNIA, 90036-3130
TEL: (323) 933-3700 / FAX: (323) 933-3874
EMAIL: sra@silverroth.com

DEPARTMENT OF PUBLIC WORKS
CITY OF LOS ANGELES
BUREAU OF ENGINEERING
ENGINEERING
CITY OF LOS ANGELES

NO.	REVISION DESCRIPTION	DATE	BY

BUILDING -
INDEX RP-300106

Project Status
PROJECT ISSUE DATE: 26.APR.19

VERTICAL CONTROL:
HORIZONTAL:

SHEET ELECTRICAL DETAILS, ELEVATIONS AND SCHEDULES
PROJECT STUDIO CITY
ADDRESS 12621 RYE STREET, STUDIO CITY, CA 91604

WORK ORDER E170267B
PLAN FILE
DRAWING E0.2
SHEET 177 OF SHEET 211

	CITY	DATE	LIC. NO.: 012941
ARCHITECTURAL DIVISION		26.APR.19	
ARCHITECT/ ENGINEER: SILVER, ROTH & ASSOC.		26.APR.19	
DESIGNED	FR	26.APR.19	
DRAWN	FR	26.APR.19	
CHECKED	FR	26.APR.19	
APPROVED BY: MAHMOOD KARIMZADEH; AIA, DEPUTY		26.APR.19	

TED ALLEN, PE

PLOTTED:6/12/2019 3:12:15 PM

THE CITY OF LOS ANGELES OR ITS OFFICERS OR AGENTS SHALL NOT BE RESPONSIBLE FOR THE ACCURACY OR COMPLETENESS OF ELECTRONIC COPIES OF THIS PLAN

FILE PATH: C:\Users\Daniel\Documents\SCRC-Project Model_ELEC_SilverRoth.rvt

TTLB TEMPLATE REVISION DATE: 06/21/18
SHEET ISSUE

REVISION DATES (DESIGN STAGE)

PANEL: 'MP'

(NEW) PANEL VOLTAGE: 208/120 3 ϕ 4 W | BUS: 400A | MAINS: MLO | AIC RATING: 10,000 | CIRCUIT CODE: blank or N : NON-CONTINUOUS; L : LONG-CONTINUOUS; R : DEMANDABLE RECEPTACLES; K : KITCHEN | (SERIES RATED) (GYM) | NO. OF EQUIPMENT: 0

DATE: 05/03/19 TIME: 10:11:45 JOB: SCRC

CKT NO	CODE	TRIP	POLE	LOAD DESIGNATION DESCRIPTION (NOTE)	M	R	L	ϕA	ϕB	ϕC	A B C	ϕA	ϕB	ϕC	L	R	M	LOAD DESIGNATION (NOTE) DESCRIPTION	TRIP	POLE	CODE	CKT NO
1		45		HP-18-1A	(1)	1	6	2760				2880					1	(1) HRU 18-1A	50			2
3			/	-		-	5		2760				2880				-	-		/	2	4
5			3	-		-	7			2760				2880			-	-		3	/	6
7	L	60		HP-18-1B	(1)	1		3840				3840					1	(1) HRU 18-1B	60			8
9	L		/	-		-			3840				3840				-	-		/	2	10
11	L		3	-		-				3840				3840			-	-		3	/	12
13		45		HP-18-2A	(1)	1		2760				1560					1	(1) CU-1	30			14
15			/	-		-			2760				1560				-	-		/	2	16
17			3	-		-				2760				1560			1	(1) CU-2	30			18
19		60		HP-18-2B	(1)	1		3840				1560					-	-		/	2	20
21			/	-		-			3840				X					SPACE				22
23			3	-		-				3840				X				SPACE				24
25		60		AHU-1			1	3864				X						SPACE				26
27			/	-		-			3864				X					SPACE				28
29			3	-		-				3864				X				SPACE				30
31		60		AHU-2		1		3864				X						SPACE				32
33			/	-		-			3864				X					SPACE				34
35			3	-		-				3864				X				SPACE				36
37		40		PANEL 'MP1'		1		1164				X						SPACE				38
39			/	-		-			927				X					SPACE				40
41			3	-		-				642				X				SPACE				42

PANEL NOTES: PHASE TOTALS ϕA: 31932 ϕB: 30135 ϕC: 29850 | TOTAL CONNECTED VA 91917

(1) PROVIDE HACR TYPE CIRCUIT BREAKERS.

CONNECTED VA (CODE N)	80397
CONNECTED VA (CODE L)	11520
CONNECTED VA (CODE R)	0
CONNECTED VA (CODE K)	0
PANEL CONNECTED KVA	91.9
PANEL DEMAND KVA	94.8
PANEL DEMAND AMPS	263.2
HIGH□ AMPS W/LCL	

PANEL: 'MP1'

(NEW) PANEL VOLTAGE: 208/120 3 ϕ 4 W | BUS: 100A | MAINS: MLO | AIC RATING: 10,000 | CIRCUIT CODE: blank or N : NON-CONTINUOUS; L : LONG-CONTINUOUS; R : DEMANDABLE RECEPTACLES; K : KITCHEN | (SERIES RATED) (GYM) | NO. OF EQUIPMENT: 0

DATE: 04/30/19 TIME: 11:39:21 JOB: SCRC

CKT NO	CODE	TRIP	POLE	LOAD DESIGNATION DESCRIPTION (NOTE)	M	R	L	ϕA	ϕB	ϕC	A B C	ϕA	ϕB	ϕC	L	R	M	LOAD DESIGNATION (NOTE) DESCRIPTION	TRIP	POLE	CODE	CKT NO
1		15		FC1-1,2			2	65.5				505					2	EF-1, EF-2	15			2
3			2	-			-		65.5				505				-	-		2	L	4
5		15		FC3-1			2			156				505			2	EF-3, EF-4	15			6
7			2	-			-	156				505					-	-		2		8
9		15		FC2-1,2			2		84.2				720		4			ROOF REC.	20	1		10
11			2	-			-			84.2				720	4			ROOF REC.	20	1		12
13		15	1	EF-10, SF-1			2	333				X						SPARE	20	1		14
15		15	1	EF-9			1		350				X					SPARE	20	1		16
17		20	1	SPARE						X				9	1			BC-1	15			18
19		20	1	SPARE				X				9						-	-		2	20
21		20	1	SPARE					X				X					SPARE	20	1		22
23		20	1	SPARE						X				X				SPARE	20	1		24
25		20	1	SPARE				X				X						SPARE	20	1		26
27		20	1	SPARE					X				X					SPARE	20	1		28
29		20	1	SPARE						X				X				SPARE	20	1		30
31				SPACE				X				X						SPACE				32
33				SPACE					X				X					SPACE				34
35				SPACE						X				X				SPACE				36
37				SPACE				X				X						SPACE				38
39				SPACE					X				X					SPACE				40
41				SPACE						X				X				SPACE				42

PANEL NOTES: PHASE TOTALS ϕA: 1574 ϕB: 1725 ϕC: 1474 | TOTAL CONNECTED VA 4772

(1) PROVIDE HACR TYPE CIRCUIT BREAKERS.

CONNECTED VA (CODE N)	3762
CONNECTED VA (CODE L)	1010
CONNECTED VA (CODE R)	0
CONNECTED VA (CODE K)	0
PANEL CONNECTED KVA	4.8
PANEL DEMAND KVA	5.0
PANEL DEMAND AMPS	14.0
HIGH□ AMPS W/LCL	

PANEL: 'CPB'

(NEW) PANEL VOLTAGE: 208/120 3 ϕ 4 W | BUS: 100A | MAINS: MLO | AIC RATING: 10,000 | CIRCUIT CODE: blank or N : NON-CONTINUOUS; L : LONG-CONTINUOUS; R : DEMANDABLE RECEPTACLES; K : KITCHEN | (SERIES RATED) | NO. OF EQUIPMENT: 0

DATE: 05/03/19 TIME: 10:43:02 JOB: SCRC

CKT NO	CODE	TRIP	POLE	LOAD DESIGNATION DESCRIPTION (NOTE)	M	R	L	ϕA	ϕB	ϕC	A B C	ϕA	ϕB	ϕC	L	R	M	LOAD DESIGNATION (NOTE) DESCRIPTION	TRIP	POLE	CODE	CKT NO
1		15		FC1.5-1,2			2	84.2				29					1	FC2-3	15			2
3			2	-			-		84.2				29				-	-		2		4
5		15		FC1.5-3,4			2			84.2				9			1	BC-2	15			6
7			2	-			-	84.2				9					-	-		2		8
9		15		FC1.5-5,6			2		84.2				561				3	EF5, EF-6, EF-7	15			10
11			2	-			-			84.2				561			-	-		2		12
13		20	1	ROOF REC.			2	360				94					1	EF-8	15			14
15		30		HP2.1			1		1560				94				-	-		2		16
17			2	-			-			1560				900			3	EF-11,12,13	20	1		18
19		20	1	SPARE				X				X						SPARE	20	1		20
21		20	1	SPARE					X				X					SPARE	20	1		22
23		20	1	SPARE						X				X				SPARE	20	1		24
25		20	1	SPARE				X				X						SPARE	20	1		26
27		20	1	SPARE					X				X					SPARE	20	1		28
29		20	1	SPARE						X				X				SPARE	20	1		30
31				SPACE				X				X						SPACE				32
33				SPACE					X				X					SPACE				34
35				SPACE						X				X				SPACE				36
37				SPACE				X				X						SPACE				38
39				SPACE					X				X					SPACE				40
41				SPACE						X				X				SPACE				42

PANEL NOTES: PHASE TOTALS ϕA: 660 ϕB: 2412 ϕC: 3198 | TOTAL CONNECTED VA 6271

(1) PROVIDE HACR TYPE CIRCUIT BREAKERS.

CONNECTED VA (CODE N)	6271
CONNECTED VA (CODE L)	0
CONNECTED VA (CODE R)	0
CONNECTED VA (CODE K)	0
PANEL CONNECTED KVA	6.3
PANEL DEMAND KVA	6.3
PANEL DEMAND AMPS	17.4
HIGH□ AMPS W/LCL	

PANEL: 'EVC'

PANEL VOLTAGE: 208/120 3 ϕ 4 W | BUS: 400A | MAINS: MLO | AIC RATING: 10,000 | CIRCUIT CODE: blank or N : NON-CONTINUOUS; L : LONG-CONTINUOUS; R : DEMANDABLE RECEPTACLES; K : KITCHEN | (SERIES RATED) | NO. OF EQUIPMENT: 0

DATE: 05/03/19 TIME: 10:11:29 JOB: SCRC

CKT NO	CODE	TRIP	POLE	LOAD DESIGNATION DESCRIPTION (NOTE)	M	R	L	ϕA	ϕB	ϕC	A B C	ϕA	ϕB	ϕC	L	R	M	LOAD DESIGNATION (NOTE) DESCRIPTION	TRIP	POLE	CODE	CKT NO
1	L	40		E.V. CHARGER #1		1		3328				3328						FUTURE E.V. CHARGER	40			2
3	L		2	-		-			3328				3328					-		2	L	4
5	L	40		E.V. CHARGER #2		1		3328				3328						FUTURE E.V. CHARGER	40			6
7	L		2	-		-			3328				3328					-		2	L	8
9	L	40		FUTURE E.V. CHARGER				3328				3328						FUTURE E.V. CHARGER	40			10
11	L		2	-					3328				3328					-		2	L	12
13	L	40		FUTURE E.V. CHARGER				3328				3328						FUTURE E.V. CHARGER	40			14
15	L		2	-					3328				3328					-		2	L	16
17	L	40		FUTURE E.V. CHARGER				3328				3328						FUTURE E.V. CHARGER	40			18
19	L		2	-					3328				3328					-		2	L	20
21	L	40		FUTURE E.V. CHARGER				3328				3328						FUTURE E.V. CHARGER	40			22
23	L		2	-					3328				3328					-		2	L	24
25				SPACE				X				X						SPACE				26
27				SPACE					X				X					SPACE				28
29				SPACE				X				X						SPACE				30

PANEL NOTES: PHASE TOTALS ϕA: 26624 ϕB: 26624 ϕC: 26624 | TOTAL CONNECTED VA 79872

CONNECTED VA (CODE N)	0
CONNECTED VA (CODE L)	79872
CONNECTED VA (CODE R)	0
CONNECTED VA (CODE K)	0
PANEL CONNECTED KVA	79.9
PANEL DEMAND KVA	99.8
PANEL DEMAND AMPS	277.2
HIGH□ AMPS W/LCL	

PANEL: 'ELI'

(1) (NEW) PANEL VOLTAGE: 208/120 1 ϕ 3 W | BUS: 5KVA | MAINS: MLO | AIC RATING: 10,000 | CIRCUIT CODE: blank or N : NON-CONTINUOUS; L : LONG-CONTINUOUS; R : DEMANDABLE RECEPTACLES; K : KITCHEN | (SERIES RATED) INTERGRAL PART OF SKVA EMERGENCY LIGHTING INVERTER | NO. OF EQUIPMENT: 0

DATE: 04/26/19 TIME: 09:12:54 JOB: SCRC

CKT NO	CODE	TRIP	POLE	LOAD DESIGNATION DESCRIPTION (NOTE)	M	R	L	ϕA	ϕC	A C	ϕA	ϕC	L	R	M	LOAD DESIGNATION (NOTE) DESCRIPTION	TRIP	POLE	CODE	CKT NO
1	L	20	1	GYM EM. LIGHTING			6	1164			69		3			COMM.RM ELEC. STORAGE	20	1	L	2
3	L	20	1	GYM LOBBY EM. LIGHTING			5		870			185	3			COMM.BLDG EXTER.LTS	20	1	L	4
5	L	20	1	GYM EXTER BLG LTS			7	453			X					SPARE	20	1		6
7		20	1	GYM, OFFICE,RR			10		446			X				SPARE	20	1		8
9		20	1	P.A. RACK	1			500			X					SPARE	20	1		10
11		20	1	SPARE				X			X					SPARE	20	1		12

PANEL NOTES: PHASE TOTALS ϕA: 1688 ϕC: 1165 | TOTAL CONNECTED VA 2853

(1) 'ELI' PANEL IS INTERGRAL PART OF THE CENTRAL LIGHTING INVERTER.

(2) CIRCUIT TO BE CONTROLLED BY PROGRAMMABLE TITLE 20 APPROVED ASTRONOMICAL DIAL TIME CLOCK AND PHOTOCELL.

CONNECTED VA (CODE N)	2853
CONNECTED VA (CODE L)	0
CONNECTED VA (CODE R)	0
CONNECTED VA (CODE K)	0
PANEL CONNECTED KVA	2.9
PANEL DEMAND KVA	2.9
PANEL DEMAND AMPS	13.7
HIGH□ AMPS W/LCL	

PANEL: 'EPL'

(1) PANEL VOLTAGE: 208/120 3 ϕ 4 W | BUS: 100A | MAINS: MLO | AIC RATING: 10,000 | CIRCUIT CODE: blank or N : NON-CONTINUOUS; L : LONG-CONTINUOUS; R : DEMANDABLE RECEPTACLES; K : KITCHEN | (SERIES RATED) | NO. OF EQUIPMENT: 0

DATE: 05/03/19 TIME: 10:12:22 JOB: SCRC

CKT NO	CODE	TRIP	POLE	LOAD DESIGNATION DESCRIPTION (NOTE)	M	R	L	ϕA	ϕB	ϕC	A B C	ϕA	ϕB	ϕC	L	R	M	LOAD DESIGNATION (NOTE) DESCRIPTION	TRIP	POLE	CODE	CKT NO
1		20	1	EM. RELAY/PL-1		1		744				X						SPARE	20	1	L	2
3		20	1	EM. RELAY/PL-3		1			992				X					SPARE	20	1	L	4
5		20	1	EM. RELAY/PL-5		1				1456				X				SPARE	20	1		6
7		20	1	EM. RELAY/PL-7		1		992				X						SPACE				8
9		20	1	EM. RELAY/PL-9		1			736				X					SPACE				10
11		20	1	SPARE						X				X				SPACE				12

PANEL NOTES: PHASE TOTALS ϕA: 1736 ϕB: 1728 ϕC: 1456 | TOTAL CONNECTED VA 4920

(1) STAND-BY PANEL FOR EMERGENCY RELAYS (ER) WILL PRIVIDE EMERGENCY POWER TO THE ER'S FROM THE PORTABLE GENERATOR, WHEN PROVIDED BY THE OWNER.

CONNECTED VA (CODE N)	4920
CONNECTED VA (CODE L)	0
CONNECTED VA (CODE R)	0
CONNECTED VA (CODE K)	0
PANEL CONNECTED KVA	4.9
PANEL DEMAND KVA	4.9
PANEL DEMAND AMPS	13.7
HIGH□ AMPS W/LCL	

PANEL: 'GPA'

(3) PANEL VOLTAGE: 208/120 3 ϕ 4 W | BUS: 100A | MAINS: MLO | AIC RATING: 10,000 | CIRCUIT CODE: blank or N : NON-CONTINUOUS; L : LONG-CONTINUOUS; R : DEMANDABLE RECEPTACLES; K : KITCHEN | (SERIES RATED) (GYM) | NO. OF EQUIPMENT: 0

DATE: 04/26/19 TIME: 11:24:32 JOB: SCRC

CKT NO	CODE	TRIP	POLE	LOAD DESIGNATION DESCRIPTION (NOTE)	M	R	L	ϕA	ϕB	ϕC	A B C	ϕA	ϕB	ϕC	L	R	M	LOAD DESIGNATION (NOTE) DESCRIPTION	TRIP	POLE	CODE	CKT NO
(2) 1	L	20	1	GYM EXTERIOR LIGHTING			9	585				1164					6	GYM LTG	20	1	L	2
3	L	20	1	RM 105, 106			6		138				970				5	GYM, LOBBY LTG	20	1	L	4
5		20	1	R, 101, 102, 103			10			465				2500			1	ELI EM. INVERTER	30			6
7		20	1	SPARE				X				2500					-	-		/	2	8
9		20	1	SPARE					X				X				-	-		/	2	10
11		20	1	SPARE						X				X			-	-		/	2	12
(3) 13		20	1	TEL.B.B	(1)		2	360				900					5	RM 105,106,108,109	20	1		14
15		20	1	107, COMM RM.			1		180				X					SPARE	20	1		16
17		20	1	107, COMM RM.			2			360				X				SPARE	20	1		18
19		20	1	MOTORIZED B/B SW	(1)	2		1392				540					3	(2) GYM RECEPT.	20	1		20
21		20	1	MOTORIZED B/B NW		2			1392				360				2	(2) GYM RECEPT.	20	1		22
23		20	1	MOTORIZED B/B NORTH		2	2			1392				300			1	(2) SO. SCORE BOARD	20	1		24
25		20	1	GYM RECEPT.	(1)		3	540				864					1	(2) E. ROLL UP DOOR	20	1		26
27		20	1	GYM RECEPT.			4		720				864				1	(2) E. ROLL UP DOOR	20	1		28
29		20	1	NORTH SCORE BOARD			1			300				720			3	EXTERIOR RECEPT. EAST	20	1		30
31		20	1	SPARE				X				900					5	(2) GYM LOBBY, OFF	20	1		32
33		20	1	SPARE					X				720				4	(2) GYM LOBBY, OFF	20	1		34
35		20	1	SPARE						X				900			5	(2) GYM LOBBY, OFF	20	1		36
37		20	1	SPARE				X				720					4	OFF CONTROLLED REC.	20	1		38
39		20	1	SPARE					X				1200				1	R/R 102, EHD	20			40
41		20	1	SPARE						X				1200			-	-		/	2	42

PANEL NOTES: PHASE TOTALS ϕA: 7965 ϕB: 6544 ϕC: 5637 | TOTAL CONNECTED VA 20146

(1) PROVIDE FACTORY ACCESSORY TIE ROD FOR CIRCUIT BREAKERS HANDLES FOR MULTIWIRE BRANCH CIRCUITS.

(2) CIRCUIT TO BE CONTROLLED BY PROGRAMMABLE TITLE 20 APPROVED ASTRONOMICAL DIAL TIME CLOCK AND PHOTOCELL.

(3) PROVIDE SPLIT-BUS PANEL.

CONNECTED VA (CODE N)	17289
CONNECTED VA (CODE L)	2857
CONNECTED VA (CODE R)	0
CONNECTED VA (CODE K)	0
PANEL CONNECTED KVA	20.1
PANEL DEMAND KVA	20.9
PANEL DEMAND AMPS	57.9
HIGH□ AMPS W/LCL	

PANEL: 'CPA'

(3) PANEL VOLTAGE: 208/120 3 ϕ 4 W | BUS: 200A | MAINS: 150A-3P MCB | AIC RATING: 10,000 | CIRCUIT CODE: blank or N : NON-CONTINUOUS; L : LONG-CONTINUOUS; R : DEMANDABLE RECEPTACLES; K : KITCHEN | (SERIES RATED) (COMMUNITY RM) | NO. OF EQUIPMENT: 7

DATE: 05/03/19 TIME: 10:12:07 JOB: SCRC

CKT NO	CODE	TRIP	POLE	LOAD DESIGNATION DESCRIPTION (NOTE)	M	R	L	ϕA	ϕB	ϕC	A B C	ϕA	ϕB	ϕC	L	R	M	LOAD DESIGNATION (NOTE) DESCRIPTION	TRIP	POLE	CODE	CKT NO
1		20	1	SPARE				X				360					2	(1) RM 201, KITCHEN REC.	20	1	K	2
3		20	1	COMM.ROOM 200, REC	(1)		3		540				500				1	RM 201, KITCHEN REC.	20	1	K	4
5		20	1	COMM.ROOM 200, REC			3			540				500			1	RM 201, KITCHEN REC.	20	1	K	6
7		20	1	COMM.ROOM 200, REC			3	540				3700					1	RM 201, RANGE	40		K	8
9		20	1	EXTERIOR REC.			2		360				3700				-	-		/	K	10
11		20	1	RM 202,205,206,207,212			6			1080				3700			1	RM 201, RANGE	40		K	12
13		20	1	IRRIG. CONTROLLER		1		180				3700					-	-		/	K	14
15		20	1	HOOD F.S. SYSTEM	(5)	1			250				1200					RM 205, EHD	20			16
17		20	1	SPARE						X				1200			-	-		/	2	18
19		20	1	SPARE				X				1200						RM 206, EHD	20			20
21		20	1	SPARE					X				1200				-	-		/	2	22
23		20	1	SPARE						X				1200				EXTERIOR EHD	20			24
25		30	/	PANEL 'CPB'		1		300				1200					-	-		/	2	26
27			/	-		-			852				X				-	-		/	2	28
29			3	-		-				1638				X				SPARE	20	1		30
(3) 31	L	20	1	RM 201-203,207			10	330				390					6	(2) EXTERIOR BLD LTS	20	1	L	32
33	L	20	1	RM 205,206,212,RRS			11		154				X					SPARE	20	1		34
35	L	20	1	RM 200		4EX		9		648				X				SPARE	20	1		36
37		20	1	SPARE					X			X						SPACE				38
39		20	1	SPARE						X			X					SPACE				40
41		20	1	SPARE						X				X				SPACE				42

PANEL NOTES: PHASE TOTALS ϕA: 11900 ϕB: 8506 ϕC: 10506 | TOTAL CONNECTED VA 30912

(1) PROVIDE FACTORY ACCESSORY TIE ROD FOR CIRCUIT BREAKERS HANDLES FOR MULTIWIRE BRANCH CIRCUITS.

(2) CIRCUIT TO BE CONTROLLED BY PROGRAMMABLE TITLE 20 APPROVED ASTRONOMICAL DIAL TIME CLOCK AND PHOTOCELL.

(3) PROVIDE SPLIT-BUS PANEL.

(4) CIRCUITS FOR THE ELECTRICAL EQUIPMENT UNDER THE HOOD TO BE CONTROLLED BY 2-POLE CONTACTOR INTERLOCK WITH THE FIRE SUPPRESSION SYSTEM AND F.A. SYSTEM TO SHUT DOWN POWER IN THE EVENT OF FIRE.

(5) PROVIDE LOCK-ON DEVICE

CONNECTED VA (CODE N)	13230
CONNECTED VA (CODE L)	1522
CONNECTED VA (CODE R)	0
CONNECTED VA (CODE K)	16160
PANEL CONNECTED KVA	30.9
PANEL DEMAND KVA	25.6
PANEL DEMAND AMPS	71.2
HIGH□ AMPS W/LCL	

PANEL: 'PL'

(NEW) PANEL VOLTAGE: 208/120 3 ϕ 4 W | BUS: 100A | MAINS: MLO | AIC RATING: 10,000 | CIRCUIT CODE: blank or N : NON-CONTINUOUS; L : LONG-CONTINUOUS; R : DEMANDABLE RECEPTACLES; K : KITCHEN | (SERIES RATED) | NO. OF EQUIPMENT: 0

DATE: 05/03/19 TIME: 10:12:33 JOB: SCRC

CKT NO	CODE	TRIP	POLE	LOAD DESIGNATION DESCRIPTION (NOTE)	M	R	L	ϕA	ϕB	ϕC	A B C	ϕA	ϕB	ϕC	L	R	M	LOAD DESIGNATION (NOTE) DESCRIPTION	TRIP	POLE	CODE	CKT NO
(3)(2) 1	L	20	1	SITE SECURITY LTG			5	620				180					1	(1) EXIST. CO-OP(FUT)	20	1	L	2
(3)(2) 3	L	20	1	SITE SECURITY LTG	(1)		8		992				180				-	EXIST. CO-OP(FUT)	20	1	L	4
(3)(2) 5	L	20	1	PARKING LOT LTS			8			1456				180			-	EXIST. CO-OP(FUT)	20	1		6
(3)(2) 7	L	20	1	SITE SECURITY LTG	(1)		6	744				X						SPARE	20	1		8
(3)(2) 9	L	20	1	SITE SEC, N. PARKING			4		496				X					SPARE	20	1		10
(3) 11	L	20	1	LTS @ BASKETBALL			5			620				X				SPARE	20	1		12
13		20	1	SPARE				X				X						SPACE				14
15		20	1	SPARE					X				X					SPACE				16
17		20	1	SPARE						X				X				SPACE				18
19				SPACE				X				X						SPACE				20
21				SPACE					X				X					SPACE				22
23				SPACE						X				X				SPACE				24

PANEL NOTES: PHASE TOTALS ϕA: 1544 ϕB: 1668 ϕC: 2256 | TOTAL CONNECTED VA 5468

(1) PROVIDE FACTORY ACCESSORY TIE ROD FOR CIRCUIT BREAKERS HANDLES FOR MULTIWIRE BRANCH CIRCUITS.

(2) CIRCUITS TO BE ROUTED VIA EMERGENCY LIGHTING RELAY 'ER', UL924 LISTED

(3) CIRCUIT TO BE CONTROLLED BY PROGRAMMABLE TITLE 20 APPROVED ASTRONOMICAL DIAL TIME CLOCK AND PHOTOCELL.

CONNECTED VA (CODE N)	5468
CONNECTED VA (CODE L)	0
CONNECTED VA (CODE R)	0
CONNECTED VA (CODE K)	0
PANEL CONNECTED KVA	5.5
PANEL DEMAND KVA	5.5
PANEL DEMAND AMPS	15.2
HIGH□ AMPS W/LCL	

BUREAU OF ENGINEERING — OFFICIAL RECORD

ELECTRICAL — No. 012941 — Exp. 3-31-21 — STATE OF CALIFORNIA

SILVER,ROTH & ASSOCIATES INC.
CONSULTING ELECTRICAL ENGINEERS
5 1 1 SOUTH FAIRFAX AVENUE
LOS ANGELES, CALIFORNIA, 90036-3130
TEL: (323) 933-3700 / FAX: (323) 933-3814
EMAIL: sra@silverroth.com

CITY OF LOS ANGELES — DEPARTMENT OF PUBLIC WORKS — BUREAU OF ENGINEERING
CITY OF LOS ANGELES

TED ALLEN, PE — CITY ENGINEER

ARCHITECTURAL DIVISION
ARCHITECT/ ENGINEER: SILVER, ROTH & ASSOC.; LIC. NO.: 012941

REVISION DESCRIPTION	DATE	BY
	26.APR.19	FR
	26.APR.19	FR
	26.APR.19	FR
	26.APR.19	FR

DESIGNED FR
DRAWN FR
CHECKED FR
APPROVED BY: MAHMOOD KARIMZADEH, AIA, DEPUTY

BUILDING -

INDEX RP-300106

CITY
DATE
NO.

VERTICAL CONTROL:
HORIZONTAL

SHEET PANEL SCHEDULES
PROJECT STUDIO CITY
ADDRESS 12621 RYE STREET, STUDIO CITY, CA 91604

Project Status
PROJECT ISSUE DATE: 26.APR.19

WORK ORDER E170267B
PLAN FILE
DRAWING E0.3
SHEET 178 OF SHEET 211

PLOTTED:6/12/2019 3:12:16 PM

THE CITY OF LOS ANGELES OR ITS OFFICERS

GENERAL NOTES:

1. MINIMUM CONDUITS SIZE FOR SITE LIGHTING IS 3/4"PVC, U.N.O.
2. MINIMUM SIZE OF CONDUCTORS FOR SIT LIGHTING AS # 8(Cu)AWG, U.N.O.
3. VERIFY LOCATION OF ALL LIGHTING POLES IN FIELD PRIOR TO ROUGHING-IN. COORDINATE WITH ARCHITECTURAL AND LANDSCAPE DRAWINGS.
4. VERIFY LOCATION AND ELEVATION OF ALL BUILDING LIGHTING IN FIELD PRIOR TO ROUGHING-IN. COORDINATE WITH ARCHITECTURAL DRAWINGS.

SPECIFIC NOTES:

1 DWP UNDERGROUND TRANSFORMER VAULT, COORDINATE EXACT LOCATION IN FIELD. SEE SHEET E1.1

2 ROUTE CONDUITS IN A WAY TO AVOID DAMAGE TO EXISTING TREE ROOTS. COORDINATE IN FIELD.

3 EXISTING BALL FIELD LIGHTING TO REMAIN CONNECTED TO PANEL 'BB'. SUBJECT TO FIELD VERIFICATION.

4 SITE SECURITY AND PARKING LOT SHALL BE CIRCUITED VIA UL 924 EMERGENCY TRANSFER RELAYS. SEE ONE LINE DIAGRAM. APPLICABLE TO CKT #1,3,5,7,9

5 REPLACE THE EXISTING HID LIGHTS WITH NEW LED TYPE 'G' ON SAME POLE. PROVIDE ALL REQUIRED MOUNTING HARDWARE AND WIRING AS REQUIRED.

6 PROVIDE AT LIGHTING POLE, LA CITY APPROVED TYPE 2 CONCRETE IN-GROUND PULL BOX TO TERMINATE HOMERUN.

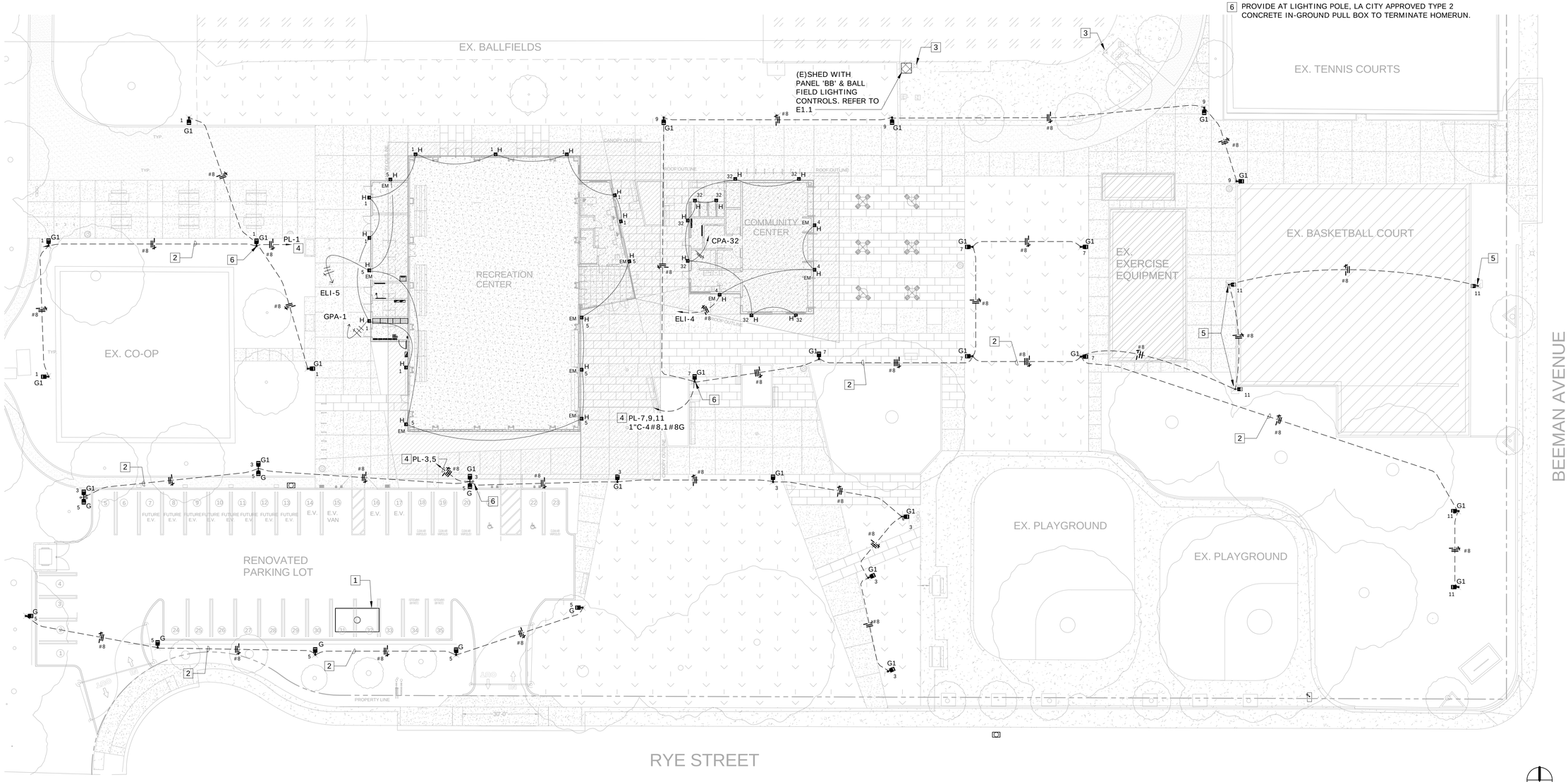

1 SITE LIGHTING PLAN
1" = 20'-0"

THE CITY OF LOS ANGELES OR ITS OFFICERS OR AGENTS SHALL NOT BE RESPONSIBLE FOR THE ACCURACY OR COMPLETENESS OF ELECTRONIC COPIES OF THIS PLAN

FILE PATH: C:\Users\Daniel\Documents\SCRC-Project Model_ELEC_SilverRoth.rvt

TTLB TEMPLATE REVISION DATE: 05/22/17
SHEET ISSUE

REVISION DATES (DESIGN STAGE)

BUREAU OF ENGINEERING
OFFICIAL RECORD

REGISTERED PROFESSIONAL ENGINEER
ALEX N. HSIA
No. 012941
Exp. 3-31-21
ELECTRICAL
STATE OF CALIFORNIA

SILVER,ROTH & ASSOCIATES INC.
CONSULTING ELECTRICAL ENGINEERS
5 1 1 SOUTH FAIRFAX AVENUE
LOS ANGELES, CALIFORNIA, 90036-3130
TEL: (323) 933-3700 / FAX: (323) 933-3874
EMAIL: sra@silverroth.com

Project Status
PROJECT ISSUE DATE: 26.APR.19

CITY OF LOS ANGELES
DEPARTMENT OF PUBLIC WORKS
BUREAU OF ENGINEERING

NO.	REVISION DESCRIPTION	DATE	BY

BUILDING -

INDEX **RP-300106**

ENGINEERING
CITY OF LOS ANGELES

	CITY
DATE	26.APR.19
	26.APR.19
	26.APR.19
	26.APR.19
	26.APR.19

TED ALLEN, PE
ARCHITECTURAL DIVISION
LIC. NO.: 012941

ARCHITECT/ ENGINEER: SILVER, ROTH & ASSOC.

DESIGNED FR
DRAWN FR
CHECKED FR
APPROVED BY: MAHMOOD KARIMZADEH, AIA, DEPUTY DIVISION MANAGER

VERTICAL CONTROL:
HORIZONTAL

SHEET SITE LIGHTING PLAN
PROJECT STUDIO CITY
ADDRESS 12621 RYE STREET, STUDIO CITY, CA 91604

WORK ORDER
E170267B
PLAN FILE
DRAWING
E1.0
SHEET 179 OF SHEET 211

PLOTTED:6/12/2019 3:12:43 PM

SPECIFIC NOTES:

1. DWP UNDERGROUND TRANSFORMER VAULT H222-LADWP (8'X16'x9'-6"H INTERIOR), COORDINATE EXACT LOCATION IN FIELD. COORDINATE WITH DWP DRAWINGS.
2. IN GROUND PULL BOX, 24"x36"x36"D FOR E.V. CHARGERS
3. VERIFY EXACT ROUTING IF THE PRIMARY CONDUITS. CONDUITS SHALL BE INSTALLED IN THE STREET. COORDINATE WITH DWP. CONTRACTOR SHALL BE LICENSED TO DO WORK IN A PUBLIC STREET.
4. FUTURE ELECTRIC VEHICLE CHARGING STATION LOCATION. LOCATE CONDUIT WITHIN 1' OF THE CURB
5. PROVIDE (2)EV CHARGERS. CONNECT TO CKTS EV-1,3 AND 5,7, 1"C-4#8,1#8G
6. TERMINATE ALL SIGNAL CONDUITS AT THE SIGNAL TERMINAL CABINET 'STC1' OR 'STC2'. MINIMUM SIZE OF SIGNAL CONDUITS IS 1"C WITH PULL CORD(P.C.).
7. PROVIDE NEW POLE TYPE 'G1' TO MATCH THE LIGHTING POLES.
8. G.C. SHALL PROVIDE TEMPORARY POWER TO THE CO-OP J-BOX. 3/4"C-4#12,1#12G.
9. PROVIDE L.A. CITY APPROVED IN-GROUND CONCRETE BOX FOR TERMINATION OF CCTV HOMERUNS.
10. PROVIDE MOUNTING BRACKETS ON THE LIGHTING POLE FOR THE CCTV CAMERA. COORDINATE MOUNTING HEIGHT WITH THE CITY OF L.A. I.T. DEPARTMENT. COORDINATE WITH THE POLE MANUFACTURER.

(1)3"C-3#500MCM,1#2G
NEW IRRIGATION CONTROLLER
(V.L.)
(E)SHED WITH PANEL 'BB' & BALL FIELD LIGHTING CONTROLS
CPA-13
#8
TERMINATE INSIDE THE SHED
EX. BALLFIELDS
2"C/P.C. COORDINATE TERMINATION POINT WITH PARK. (FUTURE FIELD LTG CONTROL)
CANOPY OUTLINE
ROOF OUTLINE
PANEL 'CPA' AND 'CPB'
COMMUNITY CENTER
SIG.TC. 'STC2'
(2)4"C/TEL/DATA/SEC
(1)2"C/F.A.
RECREATION CENTER
SIG.TC. 'STC1'
1"C/P.C. TO PL-2,4,6 (FUTURE)
EX. CO-OP 8
WP (V.L.)
2"C-4#3/0,1#4G (PANEL 'CPA')
(1)2"C/P.C. SPARE
EX. BASKETBALL COURT
EX. EXERCISE EQUIPMENT
EVC-1,3,5,7
1"C-4#8,1#8G
(5)1"C/P.C. TO 'EVC' (FUTURE EV CHARGERS)
1"C/P.C.
STC2 6
CAM
(2)1"C/P.C.
(3)1"C/P.C.
(1)1"C/P.C.
9
10 CCTV SECURITY CAMERA (TYP 3) MTD ON LTG. POLE
4
(1)1"C/P.C.
2
(1)1"C-4#8,1#8G
1,3,5,7
E.V.
VAN
CCTV SECURITY CAMERA MTD ON LTG. POLE
10
RENOVATED PARKING LOT
(4)5"C DIRECT BURIAL
1
3'-0"
12"DIAMETER VENT ASSEMBLY TYP OF 4
PROPERTY LINE
30'-0"
RYE STREET
EX. PLAYGROUND
CCTV SECURITY CAMERA MTD ON LIGHITNG POLE 10
NEW DWP POWER POLE
(V.L.)
(2)5"C, STUB OUT WHERE DIRECTED BY DWP
(2)5"C EB CONDUITS ENCASED IN CONCRETE PER DWP STANDARDS
10 CCTV SECURITY CAMERA ON NEW POLE
7
3
3'x5'x3' DEEP U.G.P.B. PER DWP STANDARDS. VERIFY EXACT LOCATION IN FIELD
BEEMAN AVENUE

1 SITE POWER AND SIGNAL PLAN
1" = 20'-0"

THE CITY OF LOS ANGELES OR ITS OFFICERS OR AGENTS SHALL NOT BE RESPONSIBLE FOR THE ACCURACY OR COMPLETENESS OF ELECTRONIC COPIES OF THIS PLAN

FILE PATH: C:\Users\Daniel\Documents\SCRC-Project Model_ELEC_SilverRoth.rvt

TTLB TEMPLATE REVISION DATE: 06/08/18
SHEET ISSUE

REVISION DATES (DESIGN STAGE)

BUREAU OF ENGINEERING
CITY OF LOS ANGELES

NO.	REVISION DESCRIPTION	DATE	BY

BUILDING -
INDEX RP-300106

BUREAU OF PUBLIC WORKS
DEPARTMENT OF ENGINEERING
CITY OF LOS ANGELES

		CITY
TED ALLEN, PE	DATE	26.APR.19
ARCHITECTURAL DIVISION	LIC. NO.: 012941	26.APR.19
ARCHITECT/ ENGINEER: SILVER, ROTH & ASSOC.		26.APR.19
DESIGNED FR		26.APR.19
DRAWN FR		26.APR.19
CHECKED FR		26.APR.19
APPROVED BY: MAHMOOD KARIMZADEH, AIA, DEPUTY CITY ENGINEER		

VERTICAL CONTROL:
HORIZONTAL

SHEET SITE POWER AND SIGNALPLAN
PROJECT STUDIO CITY
ADDRESS 12621 RYE STREET, STUDIO CITY, CA 91604

Project Status
PROJECT ISSUE DATE: 26.APR.19

BUREAU OF ENGINEERING
OFFICIAL RECORD

REGISTERED PROFESSIONAL ENGINEER
No. 012941
Exp. 3-31-21
ELECTRICAL
STATE OF CALIFORNIA

SILVER,ROTH & ASSOCIATES INC.
CONSULTING ELECTRICAL ENGINEERS
5 1 1 SOUTH FAIRFAX AVENUE
LOS ANGELES, CALIFORNIA, 90036-3130
TEL: (323) 933-3700 / FAX: (323) 933-3874
EMAIL: sra@silverroth.com

WORK ORDER E170267B
PLAN FILE
DRAWING E1.1
SHEET 180 OF SHEET 211

PLOTTED:6/12/2019 3:13:06 PM

ELECTRICAL DEMO. SPECIFIC NOTES:

1. DISCONNECT POWER TO THE EXISTING GYM BUILDING. REMOVE EXISTING MAIN SERVICE SWITCHBOARD, ALL DISTRIBUTION EQUIPMENT AND CONDUITS AND WIRES. DELIVER THE MAIN SWITCHBOARD TO THE OWNER WHERE DIRECTED, OR PROPERLY DISPOSE OF AS REQUIRED BY AHJ.
2. REMOVE ALL INTERIOR AND EXTERIOR LIGHTING FIXTURES AND LAMPS. PROPERLY DISPOSE OF AS REQUIRED BY AHJ.
3. DISCONNECT POWER AND REMOVE POLES AND LIGHTING FIXTURES IN THE AREAS THAT BEING DEMOED. PROPERLY DISPOSE OF AS REQUIRED BY AHJ.
4. CONTRACTOR SHALL PROVIDE TEMPORARY CONSTRUCTION POWER FOR THE ENTIRE DURATION OF THE PROJECT.
5. RE-ENERGIZE ALL LIGHTING AND EQUIPMENT THAT WERE DE-ENERGIZED DUE TO THE DEMOLITION.
6. PROVIDE TEMPORARY POWER FOR THE EXISTING CO-OP J-BOX. SEE SPECIFIC NOTE 8 ON SHEET E1.1
7. PROVIDE TEMPORARY POWER TO THE BALL FIELD PANEL 'BB', 400AMP, 120/240V, 1ø, 3W. PROVIDE ALL REQUIRED FEEDERS AND BRANCH CIRCUITS. THE BALL FIELD LIGHTING AND REMAINING PARK SECURITY LIGHTING SHALL REMAIN FULLY OPERATIONAL DURING THE ENTIRE DURATION OF THE CONSTRUCTION.
8. PROVIDE TEMPORARY POWER TO (1)IRRIGATION CONTROILLER DURRING THE ENTIRE DURRATION OF THE CONSTRUCTION. COORDINATE WITH OWNER.

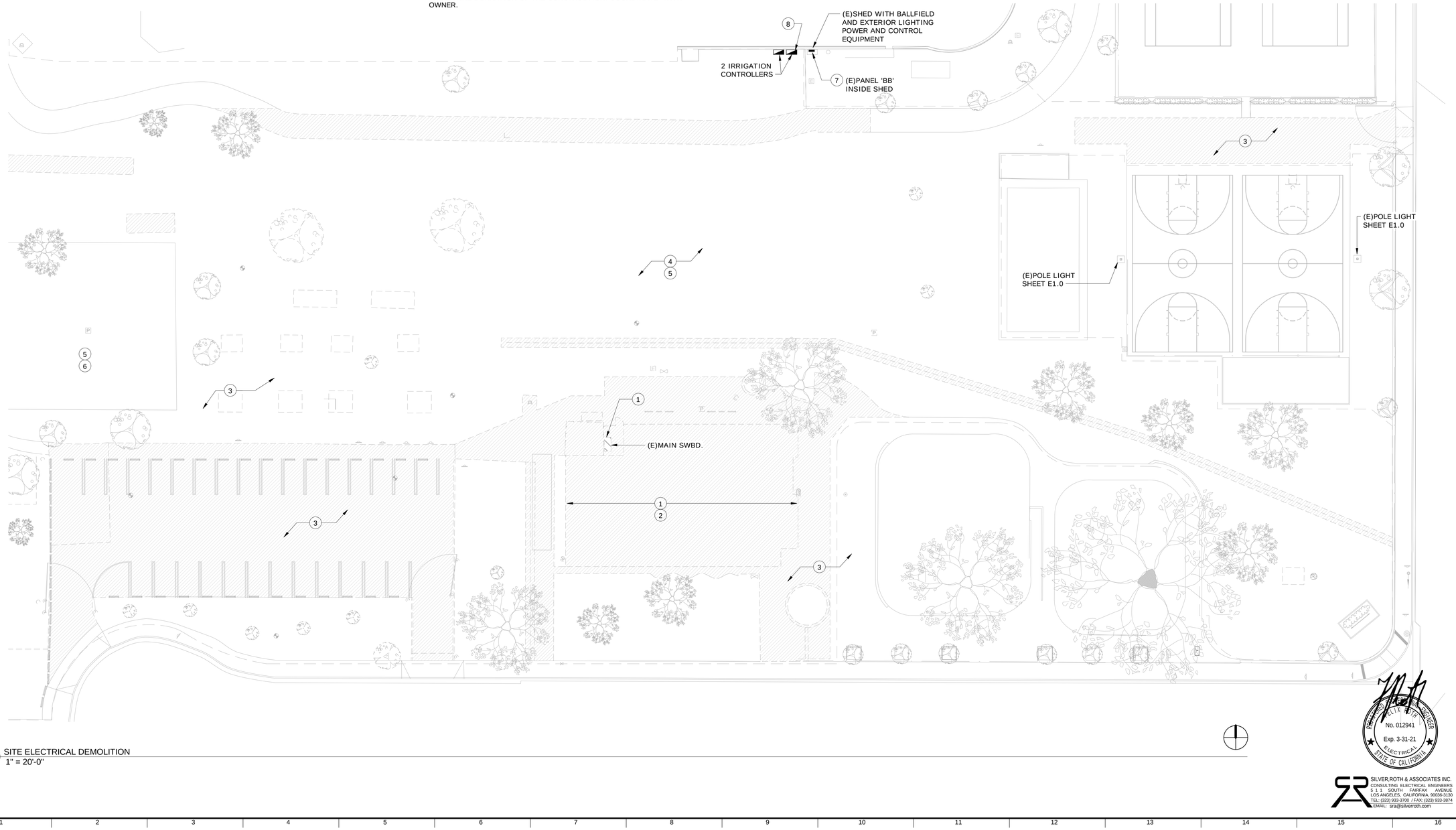

1 SITE ELECTRICAL DEMOLITION
1" = 20'-0"

THE CITY OF LOS ANGELES OR ITS OFFICERS OR AGENTS SHALL NOT BE RESPONSIBLE FOR THE ACCURACY OR COMPLETENESS OF ELECTRONIC COPIES OF THIS PLAN

FILE PATH: C:\Users\Daniel\Documents\SCRC-Project Model_ELEC_SilverRoth.rvt

TTLB TEMPLATE REVISION DATE: 26.APR.19
SHEET ISSUE

REVISION DATES (DESIGN STAGE)

BUREAU OF ENGINEERING
OFFICIAL RECORD

BUREAU OF ENGINEERING

NO.	REVISION DESCRIPTION	DATE	BY

BUILDING -

INDEX RP-300106

ENGINEERING
CITY OF LOS ANGELES

DEPARTMENT OF PUBLIC WORKS
CITY OF LOS ANGELES

TED ALLEN, PE
CITY ENGINEER

		DATE
ARCHITECTURAL DIVISION		
ARCHITECT/ ENGINEER:	SILVER, ROTH & ASSOC. LIC. NO.: 012941	26.APR.19
DESIGNED	FR	26.APR.19
DRAWN	FR	26.APR.19
CHECKED	FR	26.APR.19
APPROVED BY:	MAHMOOD KARIMZADEH, AIA, DEPUTY CITY ENGINEER	26.APR.19

VERTICAL CONTROL:
HORIZONTAL

SHEET SITE ELECTRICAL DEMOLITION PLAN

PROJECT STUDIO CITY

ADDRESS 12621 RYE STREET, STUDIO CITY, CA 91604

Project Status
PROJECT ISSUE DATE: 26.APR.19

REGISTERED PROFESSIONAL ENGINEER
ELIK KIM
No. 012941
Exp. 3-31-21
ELECTRICAL
STATE OF CALIFORNIA

SILVER,ROTH & ASSOCIATES INC.
CONSULTING ELECTRICAL ENGINEERS
5 1 1 SOUTH FAIRFAX AVENUE
LOS ANGELES, CALIFORNIA, 90036-3130
TEL: (323) 933-3700 / FAX: (323) 933-3874
EMAIL: sra@silverroth.com

WORK ORDER E170267B
PLAN FILE
DRAWING E1.2
SHEET 181 OF SHEET 211

PLOTTED:6/12/2019 3:13:08 PM

Calculation Summary							
Label	**CalcType**	**Units**	**Avg**	**Max**	**Min**	**Avg/Min**	**Max/Min**
HARDCAPES & PARKNG LOTS	Illuminance	Fc	4.32	19.0	0.2	21.60	95.00

Luminaire Schedule						
Symbol	**Qty**	**Label**	**Arrangement**	**Total Lamp Lumens**	**LLF**	**Description**
→	27	H	SINGLE	N.A.	0.850	KIM LIGHTING // WD14D3E35-60L4K
→	22	G1	SINGLE	N.A.	0.850	KIM LIGHTING // ARX16D3-3K40-FGL
← →	3	G1_2@180	BACK-BACK	N.A.	0.850	KIM LIGHTING // ARX16D3-3K40-FGL
→	8	G	SINGLE	N.A.	0.850	KIM LIGHTING // ARX16D3-4K60-FGL

Jobname:
Filename: StudioCityRecCtr_2019-6-4.AGI
Report for: SILVER, ROTH, & ASC. ELECTRICAL ENGRS
c/o: ZACK KULPINSKI
Report by: Ismael Avina
Report by: Charlie Evangelista
Mounting Ht.: See Drawing
See Luminaire Schedule for Light Loss Factor - Unless Otherwise Specified by Client.
Reflectance: Outdoor
Scale: N.T.S., Unless Noted Otherwise
Date:6/4/2019

------Disclaimer------
Luminaire data is obtained according to IES procedures under controlled laboratory conditions. Field results may differ from computer predictions due to many uncontrollable factors including, but not limited to Line Voltage Variations, Lamp Performance, Ballast input watts, LED Drivers input watts, Temperature Variations and Jobsite Conditions. Final Lighting design shall be sole responsibility of Electrical Engineer of Record.

EX. BALLFIELDS

EX. TENNIS COURTS

EX. CO-OP

RENOVATED PARKING LOT

EX. BASKETBALL COURT

EX. EXERCISE EQUIPMENT

EX. PLAYGROUND

EX. PLAYGROUND

BEEMAN AVENUE

RYE STREET

30'-0"

HARDCAPES & PARKNG LOTS

1 SITE LIGHTING CALCULATIONS
1" = 20'-0"

THE CITY OF LOS ANGELES OR ITS OFFICERS OR AGENTS SHALL NOT BE RESPONSIBLE FOR THE ACCURACY OR COMPLETENESS OF ELECTRONIC COPIES OF THIS PLAN

FILE PATH: C:\Users\Daniel\Documents\SCRC-Project Model_ELEC_SilverRoth.rvt

TTLB TEMPLATE REVISION DATE: 06/07/19
SHEET ISSUE

REVISION DATES (DESIGN STAGE)

DEPARTMENT OF PUBLIC WORKS
BUREAU OF ENGINEERING
CITY OF LOS ANGELES

ENGINEERING
CITY OF LOS ANGELES

NO.	REVISION DESCRIPTION	DATE	BY

BUILDING -

INDEX **RP-300106**

	CITY	
VERTICAL CONTROL:	DATE	26.APR.19
HORIZONTAL		26.APR.19
		26.APR.19
		26.APR.19
		26.APR.19

TED ALLEN, PE
ARCHITECTURAL DIVISION
LIC. NO.: 012941

ARCHITECT/ ENGINEER:	SILVER, ROTH & ASSOC.
DESIGNED	FR
DRAWN	FR
CHECKED	FR
APPROVED BY:	MAHMOOD KARIMZADEH, AIA, DEPUTY

SHEET SITE LIGHITNG CALCULATIONS

PROJECT STUDIO CITY

ADDRESS 12621 RYE STREET, STUDIO CITY, CA 91604

Project Status
PROJECT ISSUE DATE: 26.APR.19

CITY OF LOS ANGELES

BUREAU OF ENGINEERING
OFFICIAL RECORD

REGISTERED PROFESSIONAL ENGINEER
No. 012941
Exp. 3-31-21
ELECTRICAL
STATE OF CALIFORNIA

SILVER,ROTH & ASSOCIATES INC.
CONSULTING ELECTRICAL ENGINEERS
5 1 1 SOUTH FAIRFAX AVENUE
LOS ANGELES, CALIFORNIA, 90036-3130
TEL: (323) 933-3700 / FAX: (323) 933-3874
EMAIL: sra@silverroth.com

WORK ORDER E170267B

PLAN FILE

DRAWING **E1.3**

SHEET 182 OF SHEET 211

PLOTTED:6/12/2019 3:13:22 PM

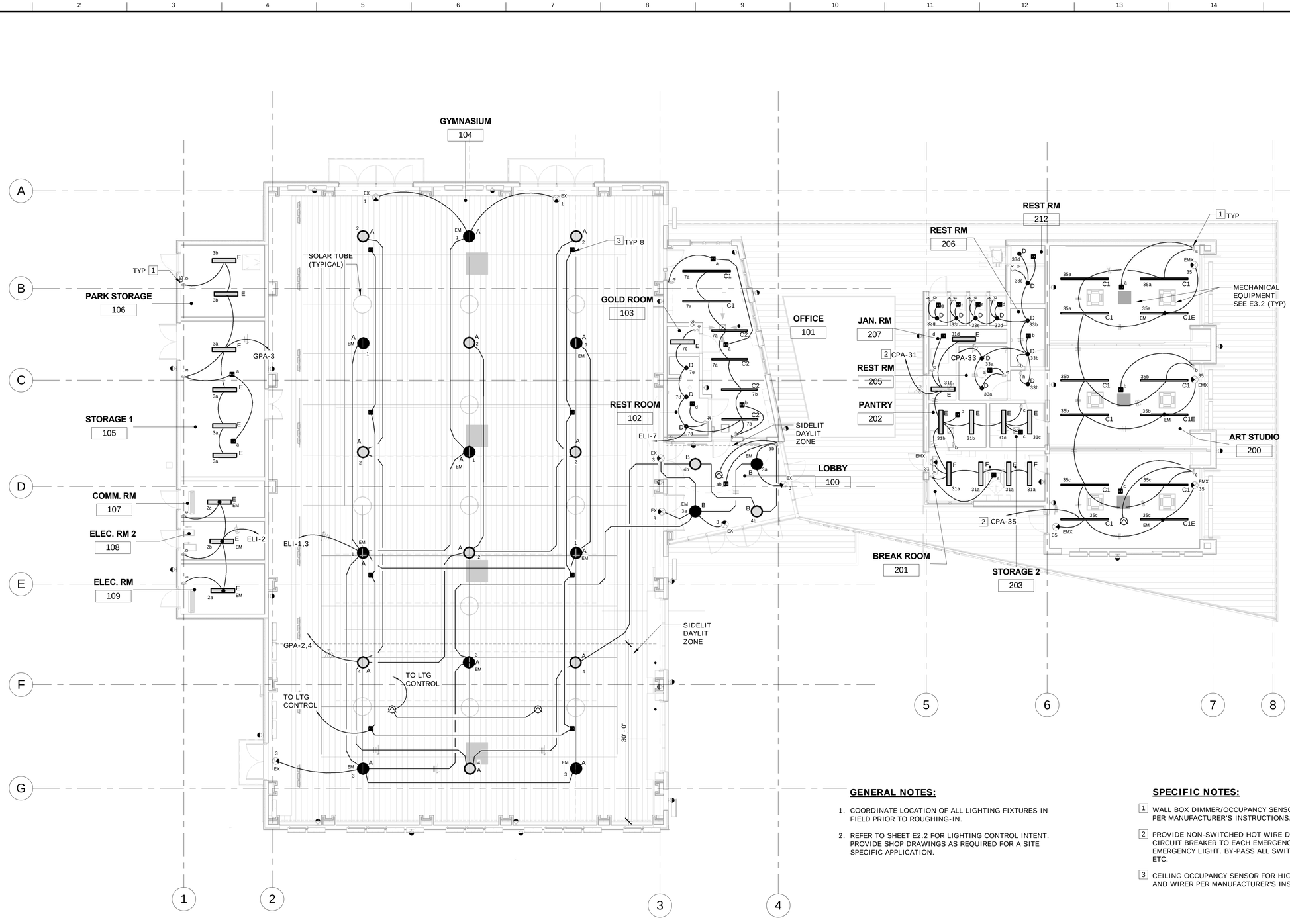

GENERAL NOTES:

1. COORDINATE LOCATION OF ALL LIGHTING FIXTURES IN FIELD PRIOR TO ROUGHING-IN.
2. REFER TO SHEET E2.2 FOR LIGHTING CONTROL INTENT. PROVIDE SHOP DRAWINGS AS REQUIRED FOR A SITE SPECIFIC APPLICATION.

SPECIFIC NOTES:

1. WALL BOX DIMMER/OCCUPANCY SENSOR. INSTALL AND WIRER PER MANUFACTURER'S INSTRUCTIONS.
2. PROVIDE NON-SWITCHED HOT WIRE DIRECTLY FROM BRANCH CIRCUIT BREAKER TO EACH EMERGENCY EXIT SIGN AND EACH EMERGENCY LIGHT. BY-PASS ALL SWITCHES, TIMERS, RELAYS, ETC.
3. CEILING OCCUPANCY SENSOR FOR HIGH CEILING. INSTALL AND WIRER PER MANUFACTURER'S INSTRUCTIONS.

1 LIGHTING PLAN
1/8" = 1'-0"

THE CITY OF LOS ANGELES OR ITS OFFICERS OR AGENTS SHALL NOT BE RESPONSIBLE FOR THE ACCURACY OR COMPLETENESS OF ELECTRONIC COPIES OF THIS PLAN

FILE PATH: C:\Users\Daniel\Documents\SCRC-Project Model_ELEC_SilverRoth.rvt

TTLB TEMPLATE REVISION DATE: 04/26/17
SHEET ISSUE

REVISION DATES (DESIGN STAGE)

BUREAU OF ENGINEERING
ENGINEERING
CITY OF LOS ANGELES

NO.	REVISION DESCRIPTION	DATE	BY

BUILDING -
INDEX RP-300106

DEPARTMENT OF PUBLIC WORKS
CITY OF LOS ANGELES

TED ALLEN, PE
CITY ENGINEER
ARCHITECTURAL DIVISION
ARCHITECT/ ENGINEER: SILVER, ROTH & ASSOC. LIC. NO.: 012941
DESIGNED FR DATE 26.APR.19
DRAWN FR DATE 26.APR.19
CHECKED FR DATE 26.APR.19
APPROVED BY: MAHMOOD KARIMZADEH, AIA, DEPUTY CITY ENGINEER DATE 26.APR.19

VERTICAL CONTROL:
HORIZONTAL

SHEET LIGHTING PLAN
PROJECT STUDIO CITY
ADDRESS 12621 RYE STREET, STUDIO CITY, CA 91604

Project Status
PROJECT ISSUE DATE: 26.APR.19

REGISTERED PROFESSIONAL ENGINEER
ALIX M. ROTH
No. 012941
Exp. 3-31-21
ELECTRICAL
STATE OF CALIFORNIA

BUREAU OF ENGINEERING
OFFICIAL RECORD

SILVER,ROTH & ASSOCIATES INC.
CONSULTING ELECTRICAL ENGINEERS
5 1 1 SOUTH FAIRFAX AVENUE
LOS ANGELES, CALIFORNIA, 90036-3130
TEL: (323) 933-3700 / FAX: (323) 933-3874
EMAIL: sra@silverroth.com

WORK ORDER E170267B
PLAN FILE
DRAWING E2.1
SHEET 183 OF SHEET 211

PLOTTED:6/12/2019 3:13:59 PM

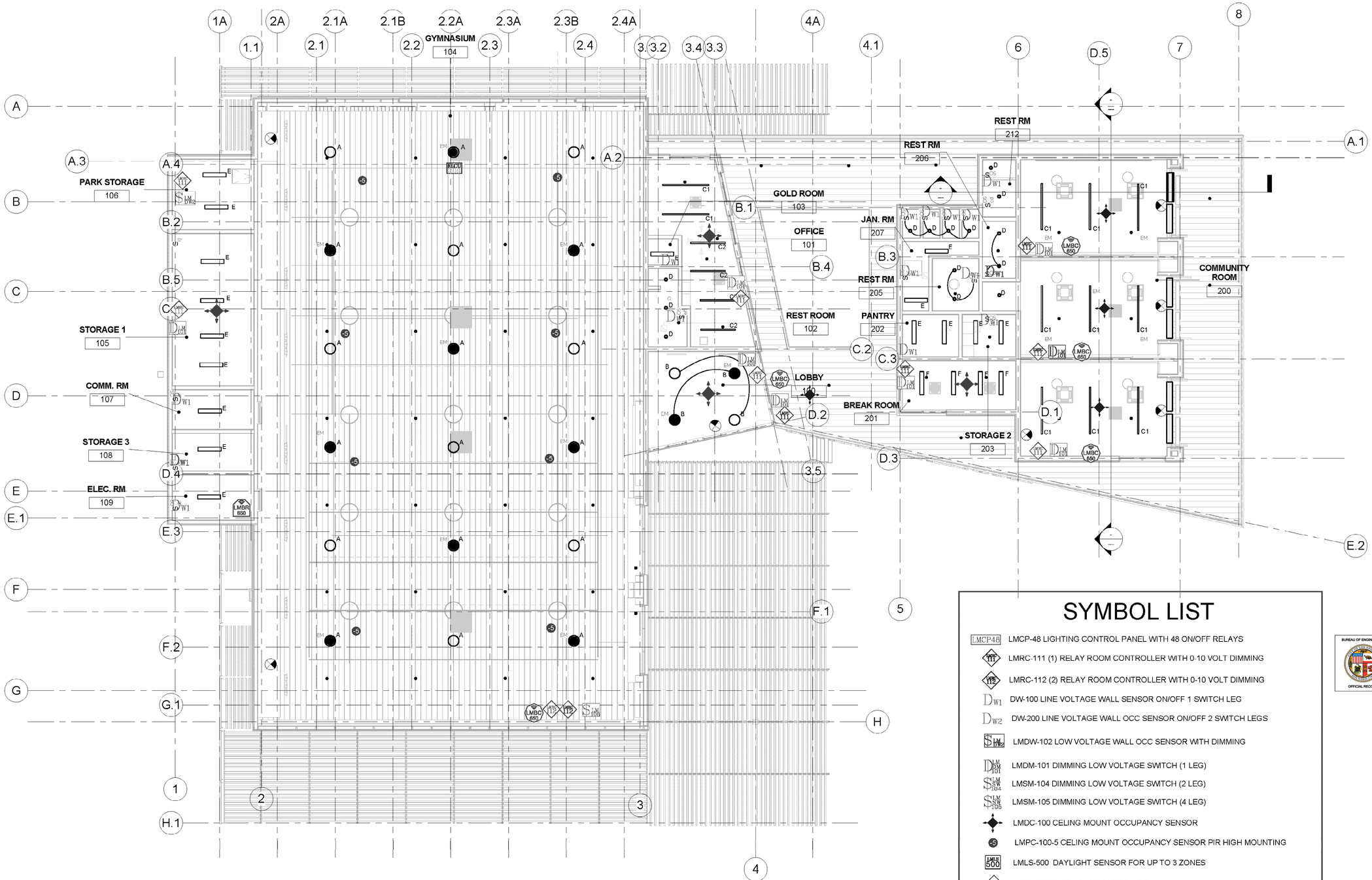

1 LIGHTING CONTROL INTENT
1/8" = 1'-0"

SYMBOL LIST

- LMCP48 — LMCP-48 LIGHTING CONTROL PANEL WITH 48 ON/OFF RELAYS
- LMRC-111 — LMRC-111 (1) RELAY ROOM CONTROLLER WITH 0-10 VOLT DIMMING
- LMRC-112 — LMRC-112 (2) RELAY ROOM CONTROLLER WITH 0-10 VOLT DIMMING
- DW1 — DW-100 LINE VOLTAGE WALL SENSOR ON/OFF 1 SWITCH LEG
- DW2 — DW-200 LINE VOLTAGE WALL OCC SENSOR ON/OFF 2 SWITCH LEGS
- LMDW-102 — LMDW-102 LOW VOLTAGE WALL OCC SENSOR WITH DIMMING
- LMDM-101 — LMDM-101 DIMMING LOW VOLTAGE SWITCH (1 LEG)
- LMSM-104 — LMSM-104 DIMMING LOW VOLTAGE SWITCH (2 LEG)
- LMSM-105 — LMSM-105 DIMMING LOW VOLTAGE SWITCH (4 LEG)
- LMDC-100 — LMDC-100 CELING MOUNT OCCUPANCY SENSOR
- -5 — LMPC-100-5 CELING MOUNT OCCUPANCY SENSOR PIR HIGH MOUNTING
- LMBR 500 — LMLS-500 DAYLIGHT SENSOR FOR UP TO 3 ZONES
- LMPL-101 — LMPL-101 PLUG LOAD CONTROLLER
- LMBC 650 — LMBC-650 NETWORK WIRELESS BRIDGE
- LMBR 650 — LMBR-650 WIRELESS BORDER ROUTER
- ELCU-200 — ELCU-200 EMERGENCY SHUNT

BUREAU OF ENGINEERING
OFFICIAL RECORD

REMOVAL OF THIS STAMP IS PROHIBITED
KELLY ROTH, ENGINEER
No. 012941
Exp. 3-31-21
ELECTRICAL
STATE OF CALIFORNIA

SILVER,ROTH & ASSOCIATES INC.
CONSULTING ELECTRICAL ENGINEERS
5 1 1 SOUTH FAIRFAX AVENUE
LOS ANGELES, CALIFORNIA, 90036-3130
TEL: (323) 933-3700 / FAX: (323) 933-3874
EMAIL: sra@silverroth.com

DEPARTMENT OF PUBLIC WORKS
CITY OF LOS ANGELES
BUREAU OF ENGINEERING

ENGINEERING
CITY OF LOS ANGELES

NO.	REVISION DESCRIPTION	DATE	BY

BUILDING -

INDEX RP-300106

CITY

	DATE
ARCHITECTURAL DIVISION	
ARCHITECT/ ENGINEER: SILVER, ROTH & ASSOC. LIC. NO.: 012941	26.APR.19
DESIGNED FR	26.APR.19
DRAWN FR	26.APR.19
CHECKED FR	26.APR.19
APPROVED BY: MAHMOOD KARIMZADEH, AIA, DEPUTY CITY ENGINEER	26.APR.19

TED ALLEN, PE

VERTICAL CONTROL:
HORIZONTAL:

SHEET LIGHTING CONTROL INTENT

PROJECT STUDIO CITY

ADDRESS 12621 RYE STREET, STUDIO CITY, CA 91604

WORK ORDER
E170267B

PLAN FILE

DRAWING
E2.2

SHEET 184 OF SHEET 211

Project Status
PROJECT ISSUE DATE: 26.APR.19

PLOTTED:6/12/2019 3:14:01 PM

THE CITY OF LOS ANGELES OR ITS OFFICERS OR AGENTS SHALL NOT BE RESPONSIBLE FOR THE ACCURACY OR COMPLETENESS OF ELECTRONIC COPIES OF THIS PLAN

TTLB TEMPLATE REVISION DATE: 05/01/19
SHEET ISSUE
FILE PATH: C:\Users\Daniel\Documents\SCRC-Project Model_ELEC_SilverRoth.rvt

REVISION DATES (DESIGN STAGE)

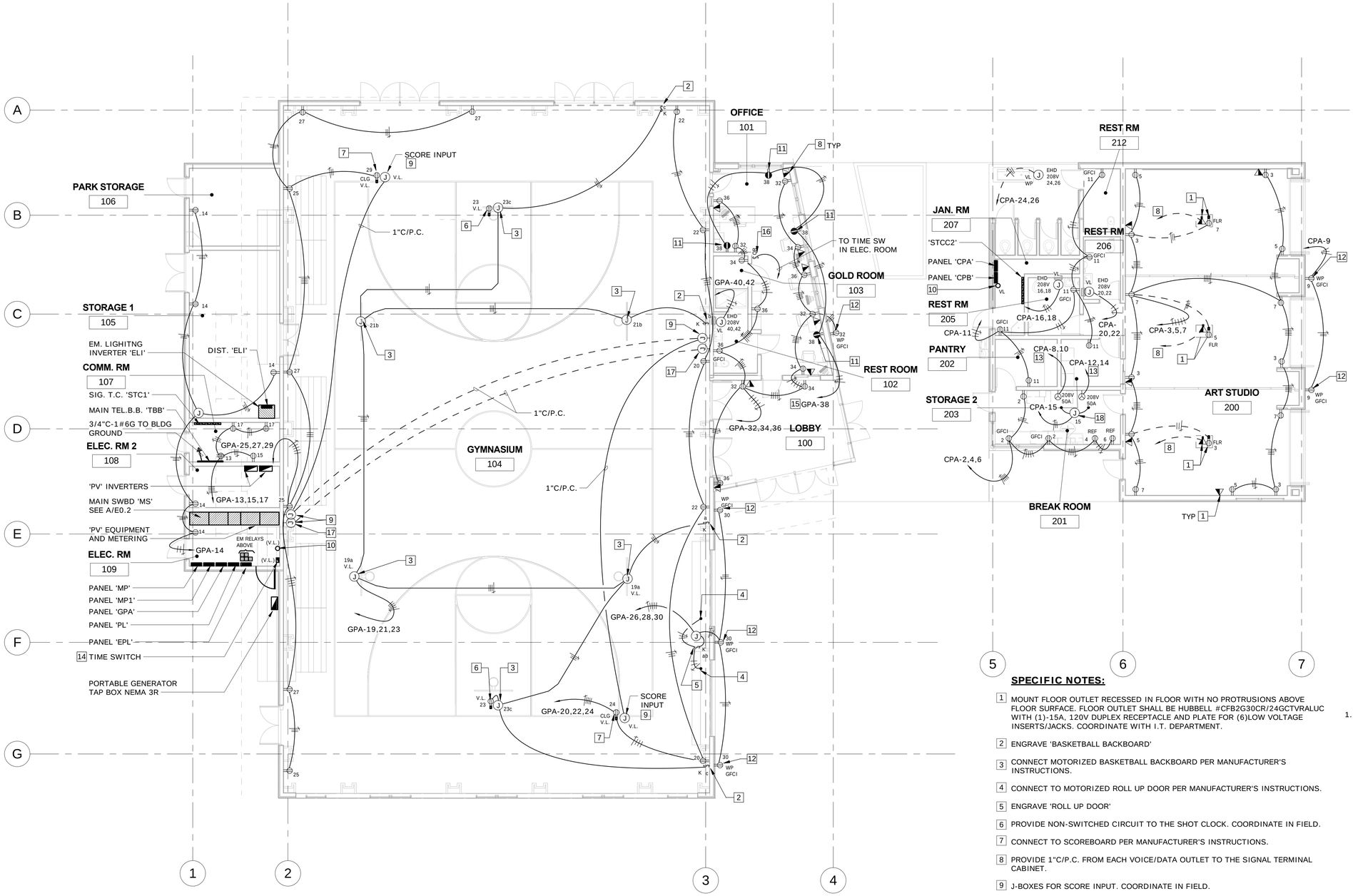

1 POWER AND SIGNAL - FLOOR PLAN
1/8" = 1'-0"

SPECIFIC NOTES:

1. MOUNT FLOOR OUTLET RECESSED IN FLOOR WITH NO PROTRUSIONS ABOVE FLOOR SURFACE. FLOOR OUTLET SHALL BE HUBBELL #CFB2G30CR/24GCTVRALUC WITH (1)-15A, 120V DUPLEX RECEPTACLE AND PLATE FOR (6)LOW VOLTAGE INSERTS/JACKS. COORDINATE WITH I.T. DEPARTMENT.
2. ENGRAVE 'BASKETBALL BACKBOARD'
3. CONNECT MOTORIZED BASKETBALL BACKBOARD PER MANUFACTURER'S INSTRUCTIONS.
4. CONNECT TO MOTORIZED ROLL UP DOOR PER MANUFACTURER'S INSTRUCTIONS.
5. ENGRAVE 'ROLL UP DOOR'
6. PROVIDE NON-SWITCHED CIRCUIT TO THE SHOT CLOCK. COORDINATE IN FIELD.
7. CONNECT TO SCOREBOARD PER MANUFACTURER'S INSTRUCTIONS.
8. PROVIDE 1"C/P.C. FROM EACH VOICE/DATA OUTLET TO THE SIGNAL TERMINAL CABINET.
9. J-BOXES FOR SCORE INPUT. COORDINATE IN FIELD.
10. PROVIDE 1"C TO THE ROOF FOR PHOTOCELL. COORDINATE IN FIELD.
11. CONTROLLED RECEPTACLE PER 2016 CALIFORNIA ENERGY CODE.
12. PROVIDE LOCKABLE 'IN-USE' WEATHERPROOF ENCLOSURE. COOPER OR HUBBELL TAYMAC, OR EQUAL.
13. 3/4"C-3#8,1#10G
14. PROVIDE PROGRAMMABLE AUTOMATIC TIME SWITCH FOR THE CONTROLLED RECEPTACLES. TIME SWITCH SHALL BE T-24 LISTED. REFER TO WIRING DIAGRAM 'A' ON E5.1
15. CIRCUITS FOR CONTROLLED RECEPTACLES SHALL BE CONTROLLED BY PROGRAMMABLE AUTOMATIC TIME SWITCH PER 2016 CALIFORNIA ENERGY CODE.
16. PROVIDE 2 HOURS OVERRIDE SWITCH FOR THE CONTROLLED RECEPTACLES. VERIFY EXACT LOCATION WITH OWNER. INTERMATIC #FD2HW OR EQUAL.
17. J-BOXFOR P.A. ANNUNCIATION. COORDINATE WITH I.T. DEPARTMENT.
18. CONNECT TO HOOD FORE SUPPRESSION SYSTEM AS INDICATED ON MECHANICAL DRAWINGS. COORDINATE IN FIELD.

GENERAL NOTES:

1. VERIFY LOCATION OF ALL RECEPTACLES, SWITCHES, OUTLETS, ETC, PRIOR TO ROUGHING-IN.

BUREAU OF ENGINEERING
OFFICIAL RECORD

THE CITY OF LOS ANGELES OR ITS OFFICERS OR AGENTS SHALL NOT BE RESPONSIBLE FOR THE ACCURACY OR COMPLETENESS OF ELECTRONIC COPIES OF THIS PLAN

FILE PATH: C:\Users\Daniel\Documents\SCRC-Project Model_ELEC_SilverRoth.rvt

TTLB TEMPLATE REVISION DATE: 04/26/17
SHEET ISSUE

REVISION DATES (DESIGN STAGE)

BUREAU OF ENGINEERING
CITY OF LOS ANGELES

DEPARTMENT OF PUBLIC WORKS
CITY OF LOS ANGELES

NO.	REVISION DESCRIPTION	DATE	BY

BUILDING -
INDEX RP-300106

TED ALLEN, PE
CITY
DATE 26.APR.19
LIC. NO.: 012941
ARCHITECTURAL DIVISION
ARCHITECT/ ENGINEER: SILVER, ROTH & ASSOC.
DESIGNED FR
DRAWN FR
CHECKED FR
APPROVED BY: MAHMOOD KARIMZADEH, AIA, DEPUTY CITY ENGINEER

Project Status
PROJECT ISSUE DATE: 26.APR.19

VERTICAL CONTROL:
HORIZONTAL:
SHEET POWER AND SIGNAL PLAN
PROJECT STUDIO CITY
ADDRESS 12621 RYE STREET, STUDIO CITY, CA 91604

WORK ORDER E170267B
PLAN FILE
DRAWING E3.1
SHEET 185 OF SHEET 211

REGISTERED PROFESSIONAL ENGINEER FELIX HUI No. 012941 Exp. 3-31-21 ELECTRICAL STATE OF CALIFORNIA

SILVER,ROTH & ASSOCIATES INC.
CONSULTING ELECTRICAL ENGINEERS
5 1 1 SOUTH FAIRFAX AVENUE
LOS ANGELES, CALIFORNIA, 90036-3130
TEL: (323) 933-3700 / FAX: (323) 933-3874
EMAIL: sra@silverroth.com

PLOTTED:6/12/2019 3:14:05 PM

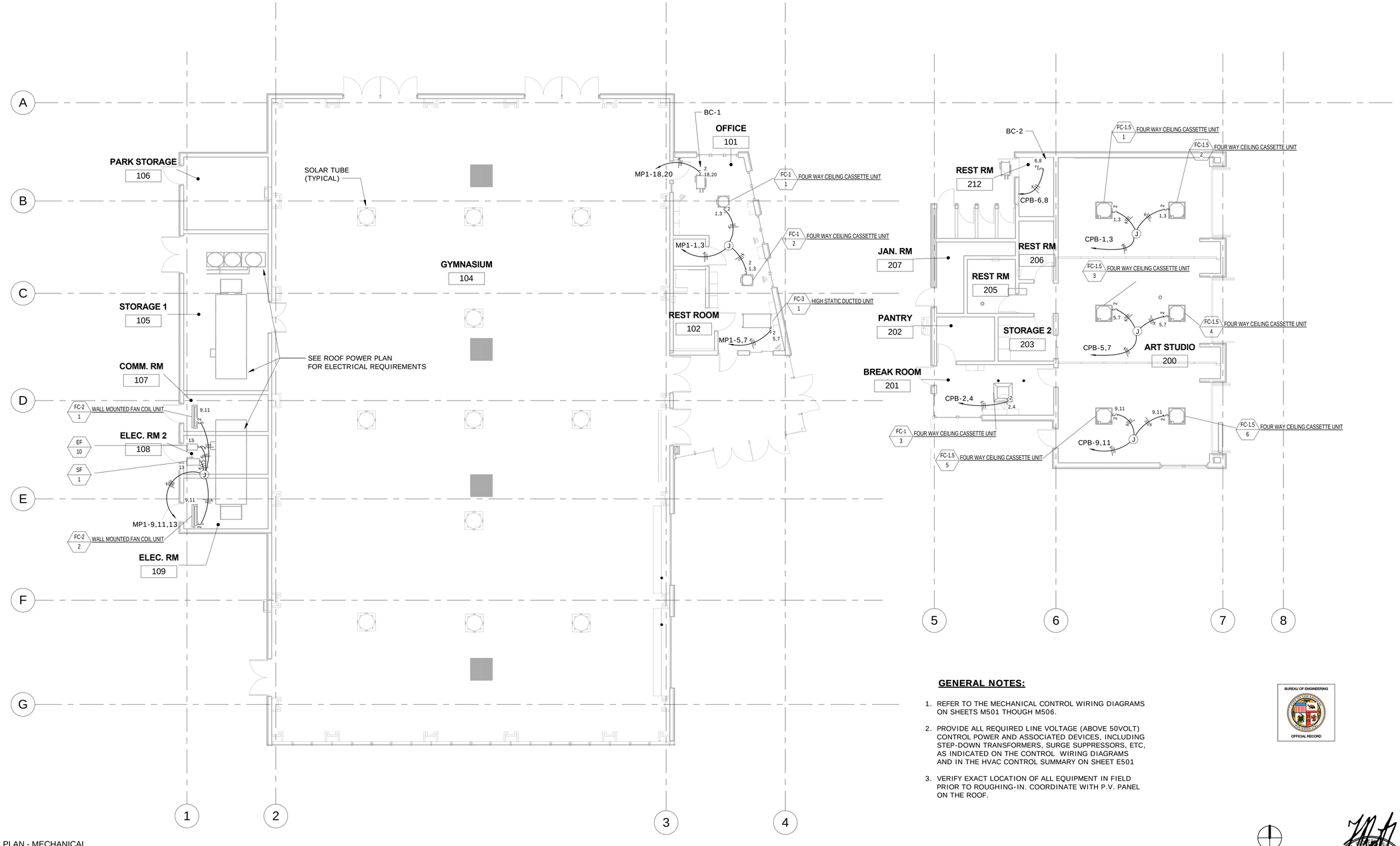

1 POWER PLAN - MECHANICAL EQUIPMENT
1/8" = 1'-0"

GENERAL NOTES:

1. REFER TO THE MECHANICAL CONTROL WIRING DIAGRAMS ON SHEETS M501 THOUGH M506.
2. PROVIDE ALL REQUIRED LINE VOLTAGE (ABOVE 50VOLT) CONTROL POWER AND ASSOCIATED DEVICES, INCLUDING STEP-DOWN TRANSFORMERS, SURGE SUPPRESSORS, ETC, AS INDICATED ON THE CONTROL WIRING DIAGRAMS AND IN THE HVAC CONTROL SUMMARY ON SHEET E501
3. VERIFY EXACT LOCATION OF ALL EQUIPMENT IN FIELD PRIOR TO ROUGHING-IN. COORDINATE WITH P.V. PANEL ON THE ROOF.

BUREAU OF ENGINEERING OFFICIAL RECORD

REGISTERED PROFESSIONAL ENGINEER ELECTRICAL No. 012941 Exp. 3-31-21 STATE OF CALIFORNIA

SILVER,ROTH & ASSOCIATES INC.
CONSULTING ELECTRICAL ENGINEERS
5 1 1 SOUTH FAIRFAX AVENUE
LOS ANGELES, CALIFORNIA, 90036-3130
TEL: (323) 933-3700 / FAX: (323) 933-3874
EMAIL: sra@silverroth.com

THE CITY OF LOS ANGELES OR ITS OFFICERS OR AGENTS SHALL NOT BE RESPONSIBLE FOR THE ACCURACY OR COMPLETENESS OF ELECTRONIC COPIES OF THIS PLAN

FILE PATH: C:\Users\Daniel\Documents\SCRC-Project Model_ELEC_SilverRoth.rvt

TTLB TEMPLATE REVISION DATE: 04/26/17
SHEET ISSUE

REVISION DATES (DESIGN STAGE)

BUREAU OF ENGINEERING
ENGINEERING
CITY OF LOS ANGELES

NO.	REVISION DESCRIPTION	DATE	BY

BUILDING -

INDEX RP-300106

DEPARTMENT OF PUBLIC WORKS
CITY OF LOS ANGELES

TED ALLEN, PE
ARCHITECTURAL DIVISION
LIC. NO.: 012941

ARCHITECT/ ENGINEER:	SILVER, ROTH & ASSOC.	
DESIGNED	FR	26.APR.19
DRAWN	FR	26.APR.19
CHECKED	FR	26.APR.19
APPROVED BY:	MAHMOOD KARIMZADEH, AIA, DEPUTY CITY ENGINEER	26.APR.19

CITY DATE

Project Status
PROJECT ISSUE DATE: 26.APR.19

VERTICAL CONTROL:
HORIZONTAL:

SHEET POWER PLAN - MECHANICAL EQUIPMENT
PROJECT STUDIO CITY
ADDRESS 12621 RYE STREET, STUDIO CITY, CA 91604

WORK ORDER E170267B
PLAN FILE
DRAWING E3.2
SHEET 186 OF SHEET 211

PLOTTED:6/12/2019 3:14:08 PM

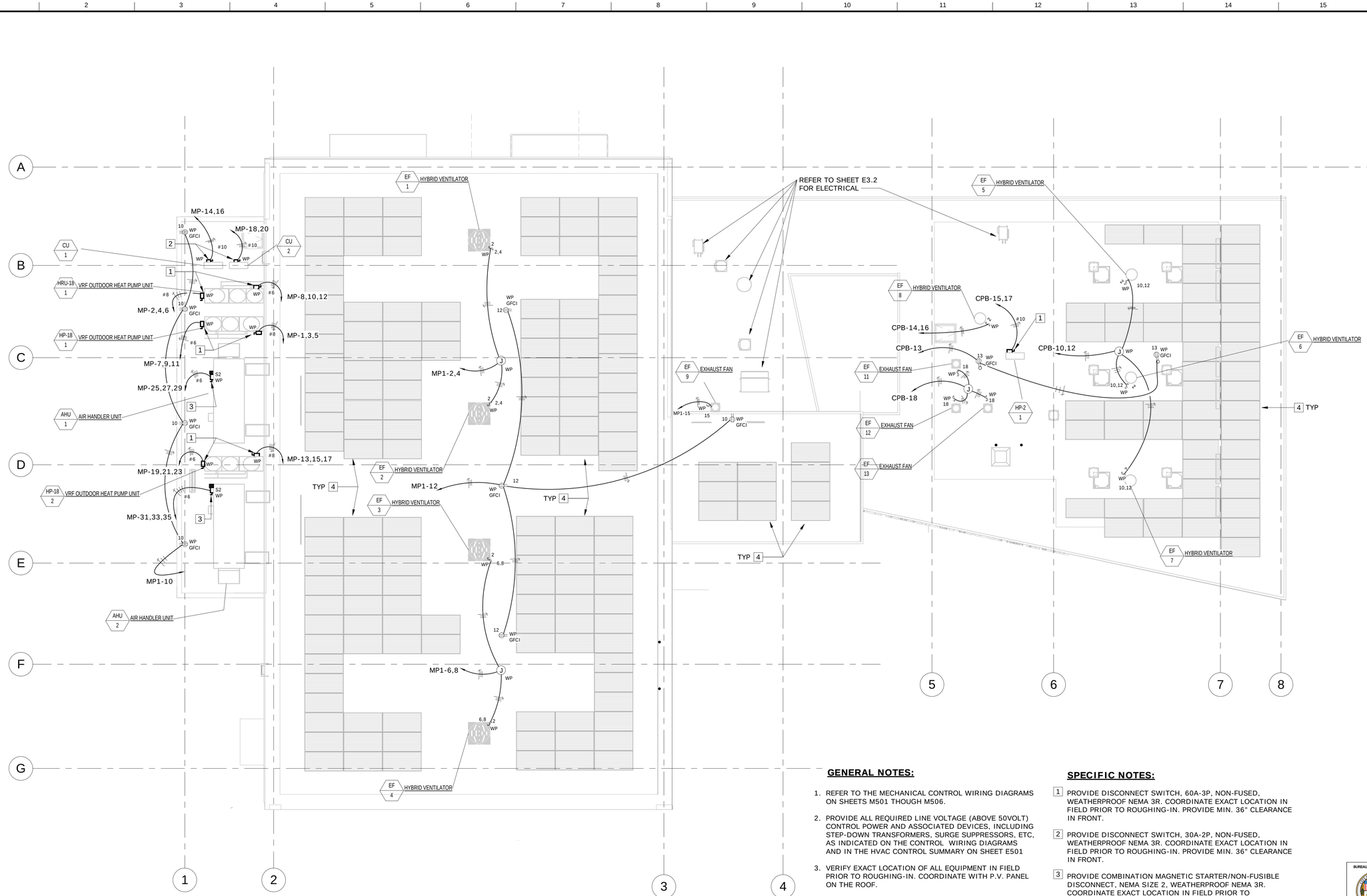

1 POWER PLAN - ROOF
1/8" = 1'-0"

GENERAL NOTES:

1. REFER TO THE MECHANICAL CONTROL WIRING DIAGRAMS ON SHEETS M501 THOUGH M506.
2. PROVIDE ALL REQUIRED LINE VOLTAGE (ABOVE 50VOLT) CONTROL POWER AND ASSOCIATED DEVICES, INCLUDING STEP-DOWN TRANSFORMERS, SURGE SUPPRESSORS, ETC, AS INDICATED ON THE CONTROL WIRING DIAGRAMS AND IN THE HVAC CONTROL SUMMARY ON SHEET E501
3. VERIFY EXACT LOCATION OF ALL EQUIPMENT IN FIELD PRIOR TO ROUGHING-IN. COORDINATE WITH P.V. PANEL ON THE ROOF.

SPECIFIC NOTES:

1 PROVIDE DISCONNECT SWITCH, 60A-3P, NON-FUSED, WEATHERPROOF NEMA 3R. COORDINATE EXACT LOCATION IN FIELD PRIOR TO ROUGHING-IN. PROVIDE MIN. 36" CLEARANCE IN FRONT.

2 PROVIDE DISCONNECT SWITCH, 30A-2P, NON-FUSED, WEATHERPROOF NEMA 3R. COORDINATE EXACT LOCATION IN FIELD PRIOR TO ROUGHING-IN. PROVIDE MIN. 36" CLEARANCE IN FRONT.

3 PROVIDE COMBINATION MAGNETIC STARTER/NON-FUSIBLE DISCONNECT, NEMA SIZE 2, WEATHERPROOF NEMA 3R. COORDINATE EXACT LOCATION IN FIELD PRIOR TO ROUGHING-IN. PROVIDE MIN. 36" CLEARANCE IN FRONT.

4 PROVIDE ARRAY OF ROOF MOUNTED P.V. PANELS. CELL: 6x24 MONO CRYSTALLINE Q.ANTUM SOLAR HALF CELLS. HANWHA Q.PEAK DUO#LG5.2-395, 1500v IEC/UL SOLAR MODULE WITH 6 BUSBAR CELL DESIGN, 395Wp YIELD, LOW LCOE, OR APPROVED EQUAL WITH SAME OR BETTER PARAMETERS.

BUREAU OF ENGINEERING OFFICIAL RECORD

REGISTERED PROFESSIONAL ENGINEER ELIK KARIMZADEH No. 012941 Exp. 3-31-21 ELECTRICAL STATE OF CALIFORNIA

SILVER,ROTH & ASSOCIATES INC.
CONSULTING ELECTRICAL ENGINEERS
5 1 1 SOUTH FAIRFAX AVENUE
LOS ANGELES, CALIFORNIA. 90036-3130
TEL: (323) 933-3700 / FAX: (323) 933-3874
EMAIL: sra@silverroth.com

Project Status
PROJECT ISSUE DATE: 26.APR.19

CITY OF LOS ANGELES
DEPARTMENT OF PUBLIC WORKS
BUREAU OF ENGINEERING

ENGINEERING
CITY OF LOS ANGELES

NO.	REVISION DESCRIPTION	DATE	BY

BUILDING -

INDEX **RP-300106**

	CITY
DATE	26.APR.19
LIC. NO.: 012941	26.APR.19
	26.APR.19
	26.APR.19
	26.APR.19

ARCHITECTURAL DIVISION
ARCHITECT/ ENGINEER: SILVER, ROTH & ASSOC.
DESIGNED FR
DRAWN FR
CHECKED FR
APPROVED BY: MAHMOOD KARIMZADEH, AIA, DEPUTY DIVISION MANAGER

TED ALLEN, PE

VERTICAL CONTROL:
HORIZONTAL

SHEET POWER PLAN - ROOF
PROJECT STUDIO CITY
ADDRESS 12621 RYE STREET, STUDIO CITY, CA 91604

WORK ORDER E170267B
PLAN FILE
DRAWING **E3.3**
SHEET 187 OF SHEET 211

PLOTTED:6/12/2019 3:14:14 PM

THE CITY OF LOS ANGELES OR ITS OFFICERS OR AGENTS SHALL NOT BE RESPONSIBLE FOR THE ACCURACY OR COMPLETENESS OF ELECTRONIC COPIES OF THIS PLAN

FILE PATH: C:\Users\Daniel\Documents\SCRC-Project Model_ELEC_SilverRoth.rvt

TTLB TEMPLATE REVISION DATE: 04/26/17
SHEET ISSUE

REVISION DATES (DESIGN STAGE)

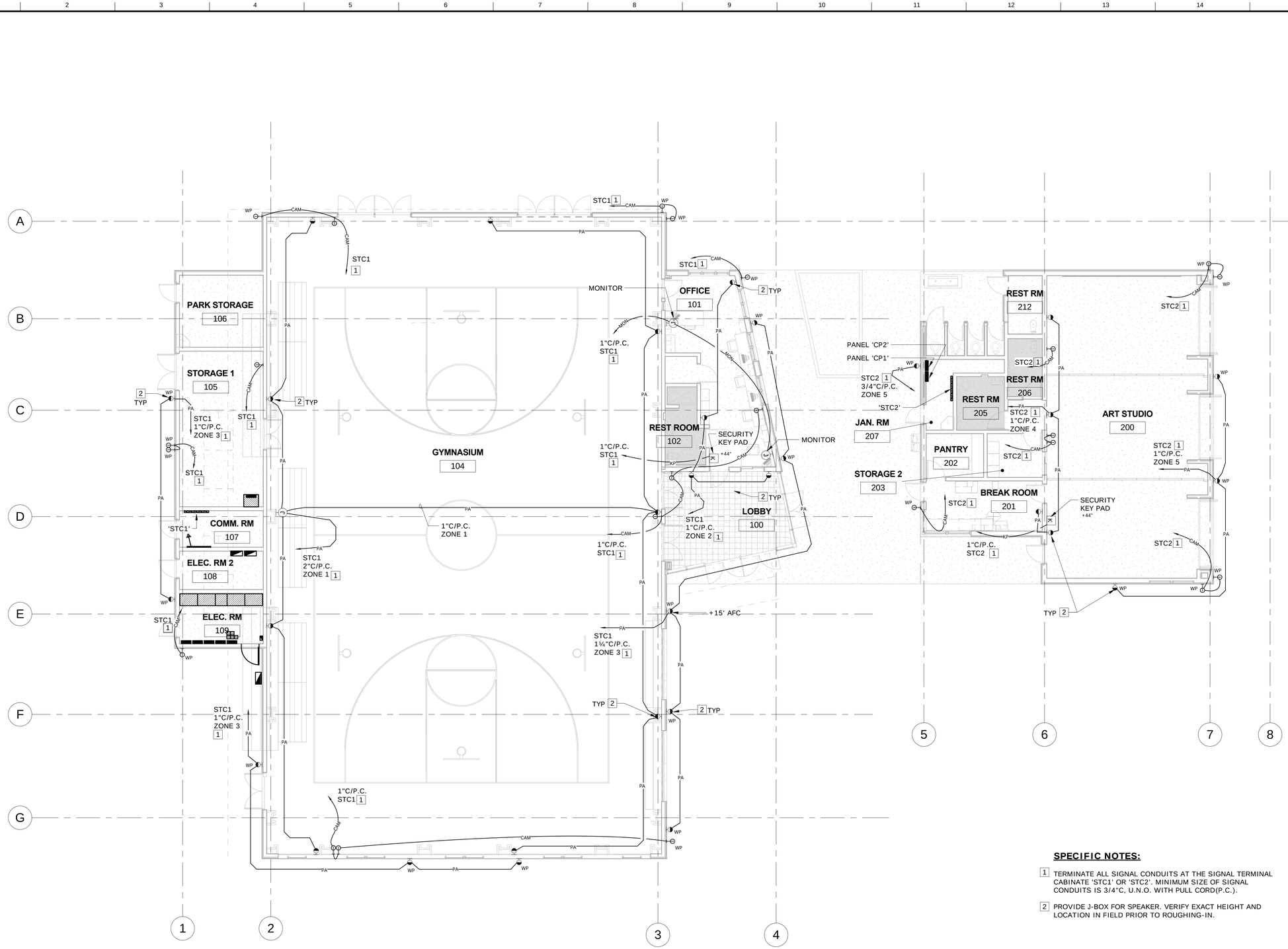

1 LOW VOLTAGE - FLOOR PLAN
1/8" = 1'-0"

SPECIFIC NOTES:

1 TERMINATE ALL SIGNAL CONDUITS AT THE SIGNAL TERMINAL CABINATE 'STC1' OR 'STC2'. MINIMUM SIZE OF SIGNAL CONDUITS IS 3/4"C, U.N.O. WITH PULL CORD(P.C.).

2 PROVIDE J-BOX FOR SPEAKER. VERIFY EXACT HEIGHT AND LOCATION IN FIELD PRIOR TO ROUGHING-IN.

BUREAU OF ENGINEERING
OFFICIAL RECORD

REGISTERED PROFESSIONAL ENGINEER
No. 012941
Exp. 3-31-21
ELECTRICAL
STATE OF CALIFORNIA

SILVER,ROTH & ASSOCIATES INC.
CONSULTING ELECTRICAL ENGINEERS
5 1 1 SOUTH FAIRFAX AVENUE
LOS ANGELES, CALIFORNIA, 90036-3130
TEL: (323) 933-3700 / FAX: (323) 933-3874
EMAIL: sra@silverroth.com

Project Status
PROJECT ISSUE DATE: 26.APR.19

CITY OF LOS ANGELES
DEPARTMENT OF PUBLIC WORKS
BUREAU OF ENGINEERING

ENGINEERING
CITY OF LOS ANGELES

NO.	REVISION DESCRIPTION	DATE	BY

BUILDING -

INDEX RP-300106

CITY

APPROVED BY:	MAHMOOD KARIMZADEH, AIA, DEPUTY CITY ENGINEER	26.APR.19	
CHECKED	FR	26.APR.19	
DRAWN	Author	26.APR.19	
DESIGNED	FR	26.APR.19	
ARCHITECT/ ENGINEER:	SILVER, ROTH & ASSOC. LIC. NO.: 012941		
ARCHITECTURAL DIVISION			

TED ALLEN, PE

VERTICAL CONTROL:
HORIZONTAL

SHEET LOW VOLTAGE - FLOOR PLAN

PROJECT STUDIO CITY

ADDRESS 12621 RYE STREET, STUDIO CITY, CA 91604

WORK ORDER E170267B

PLAN FILE

DRAWING E4.1

SHEET 188 OF SHEET 211

PLOTTED:6/12/2019 3:14:17 PM

THE CITY OF LOS ANGELES OR ITS OFFICERS OR AGENTS SHALL NOT BE RESPONSIBLE FOR THE ACCURACY OR COMPLETENESS OF ELECTRONIC COPIES OF THIS PLAN

FILE PATH: C:\Users\Daniel\Documents\SCRC-Project Model_ELEC_SilverRoth.rvt

TTLB TEMPLATE REVISION DATE: 06/08/18
SHEET ISSUE

REVISION DATES (DESIGN STAGE)

STATE OF CALIFORNIA
Indoor Lighting
NRCC-LTI-E (Created 7/18)
CALIFORNIA ENERGY COMMISSION

CERTIFICATE OF COMPLIANCE		NRCC-LTI-E
Project Name: Studio City Rec Center	Report Page:	Page 7 of 7
Project Address: 12621 Rye Street	Date Prepared:	10/31/2018

DOCUMENTATION AUTHOR'S DECLARATION STATEMENT

Documentation Author Name:	Felix Roth	Documentation Author Signature:	
Company:	SRA	Signature Date:	10/31/2018
Address:	511 S. Fairfax Ave.	CEA/ HERS Certification Identification (if applicable):	12941
City/State/Zip:	Los Angeles, CA 90036	Phone:	323.933.9700

RESPONSIBLE PERSON'S DECLARATION STATEMENT

I certify the following under penalty of perjury, under the laws of the State of California:

1. **The information provided on this Certificate of Compliance is true and correct.**
2. **I am eligible under Division 3 of the Business and Professions Code to accept responsibility for the building design or system design identified on this Certificate of Compliance (responsible designer)**
3. **The energy features and performance specifications, materials, components, and manufactured devices for the building design or system design identified on this Certificate of Compliance conform to the requirements of Title 24, Part 1 and Part 6 of the California Code of Regulations.**
4. **The building design features or system design features identified on this Certificate of Compliance are consistent with the information provided on other applicable compliance documents, worksheets, calculations, plans and specifications submitted to the enforcement agency for approval with this building permit application.**
5. **I will ensure that a completed signed copy of this Certificate of Compliance shall be made available with the building permit(s) issued for the building, and made available to the enforcement agency for all applicable inspections. I understand that a completed signed copy of this Certificate of Compliance is required to be included with the documentation the builder provides to the building owner at occupancy.**

Responsible Designer Name:	Felix Roth	Responsible Designer Signature:	
Company :	Silver Roth and Associates	Date Signed:	10/31/2018
Address:	511 S. Fairfax Ave.	License:	12941
City/State/Zip:	Los Angeles, CA 90036	Phone:	323.933.3700

LEGEND:

BPS - BYPASS SWITCH, 0-2 HOUR INTERVAL TIMING SWITCH, OPENS AT END OF TIMING PERIOD, MARKED "BYPASS TIMER"

C - LIGHTING CONTACTOR WITH 30A/277V BALLAST RATED CONTACTS, ONE POLE FOR EACH LIGHTING CIRCUIT - SEE PANEL SCHEDULE

PC - PHOTOELECTRIC CONTROL WITH ADJUSTABLE SHUTTER, MOUNTED ON ROOF WITH CELL POSITIONED IN A NORTHERLY DIRECTION

TS - PROGRAMMABLE TIME SWITCH WITH EACH CHANNEL INDEPENDENTLY PROGRAMMABLE FOR 365-DAY LOAD CONTROL; ONE CHANNEL FOR EACH ZONE; CERTIFIED UNDER TITLE 24, CALIFORNIA CODE OF REGULATIONS -
INTERMATIC #ET70000C SERIES
(OR EQUAL BY TORK, PARAGON)

NOTES:

1. FOR CIRCUIT ASSIGNMENTS, REFER TO PANEL SCHEDULE.

TITLE-24 NOTES:

1. PROVIDE ALL REQUIRED WIRING, DEVICES, TIME CLOCKS AND OVERRIDE SWITCHES AS REQUIRED FOR BUILDING LIGHTING SHUT-OFF
2. ALL TIME CLOCKS AND CONTROLS SHALL BE T-24 CERTIFIED

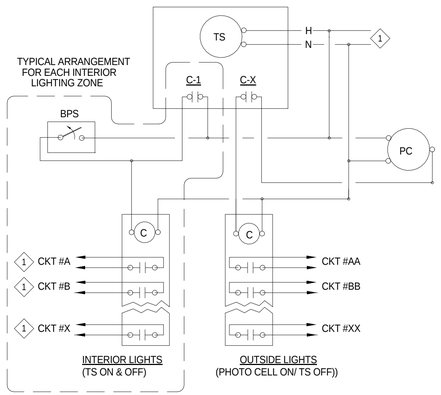

TYPICAL INTERIOR * EXTERIOR LIGHTING CONTROL WIRING DIAGRAM

SCALE: NTS

A
-

STATE OF CALIFORNIA
Indoor Lighting
NRCC-LTI-E (Created 7/18)
CALIFORNIA ENERGY COMMISSION

CERTIFICATE OF COMPLIANCE		NRCC-LTI-E
Project Name: Studio City Rec Center	Report Page:	Page 4 of 7
Project Address: 12621 Rye Street	Date Prepared:	10/31/2018

01	02	03	04	05	06		
Area Description	Complete Building or Area Category Primary Function Area	Allowed Density (W/ft²)	Area (ft²)	Allowed Wattage (Watts)	Additional Allowances / Adjustments		
					Footnotes	PAF	Portable Ltg
Gymnasium	Exercise Center, Gymnasium	1	7,307	7,307	☐	☐	☐
Storage 105	Corridor, Restrm, Stair, Support	0.6	408	244.8	☐	☐	☐
Park Storage 106	Corridor, Restrm, Stair, Support	0.6	212	127.2	☐	☐	☐
Comm Rm 107	Corridor, Restrm, Stair, Support	0.6	116	69.6	☐	☐	☐
Storage 108	Corridor, Restrm, Stair, Support	0.6	122	73.2	☐	☐	☐
Electrical Room109	Corridor, Restrm, Stair, Support	0.6	134	80.4	☐	☐	☐
Community Room 200	Convention, Conf., Meeting	1.2	1,419	1,702.8	☐	☐	☐
Kitchen/Break 201	Kitchen, Food Preparation	1.2	211	253.2	☐	☐	☐
Pantry 202	Corridor, Restrm, Stair, Support	0.6	87	52.2	☐	☐	☐
Storage 203	Corridor, Restrm, Stair, Support	0.6	87	52.2	☐	☐	☐
Restroom 205	Corridor, Restrm, Stair, Support	0.6	90	54	☐	☐	☐
Restroom 206	Corridor, Restrm, Stair, Support	0.6	69	41.4	☐	☐	☐
Janitor 207	Corridor, Restrm, Stair, Support	0.6	65	39	☐	☐	☐
Restrooms 208-211	Corridor, Restrm, Stair, Support	0.6	94	56.4	☐	☐	☐
Restroom 212	Corridor, Restrm, Stair, Support	0.6	74	44.4	☐	☐	☐
		TOTAL:	**11,352**	**10,884.75**	See Tables J, K, R for detail		

J. POWER ADJUSTMENT: PORTABLE LIGHTING IN OFFICES
This Section Does Not Apply

K. ADDITIONAL LIGHTING ALLOWANCE: AREA CATEGORY METHOD FOOTNOTES
This Section Does Not Apply

L. TAILORED METHOD GENERAL LIGHTING POWER ALLOWANCE
This Section Does Not Apply

M. ADDITIONAL LIGHTING ALLOWANCE: TAILORED SPECIAL FUNCTION AREAS
This Section Does Not Apply

STATE OF CALIFORNIA
Indoor Lighting
NRCC-LTI-E (Created 7/18)
CALIFORNIA ENERGY COMMISSION

CERTIFICATE OF COMPLIANCE		NRCC-LTI-E
Project Name: Studio City Rec Center	Report Page:	Page 5 of 7
Project Address: 12621 Rye Street	Date Prepared:	10/31/2018

N. ADDITIONAL LIGHTING ALLOWANCE: TAILORED WALL DISPLAY
This Section Does Not Apply

O. ADDITIONAL LIGHTING ALLOWANCE: TAILORED FLOOR AND TASK LIGHTING
This Section Does Not Apply

P. ADDITIONAL LIGHTING ALLOWANCE: TAILORED ORNAMENTAL/SPECIAL EFFECTS
This Section Does Not Apply

Q. ADDITIONAL LIGHTING ALLOWANCE: TAILORED VERY VALUABLE MERCHANDISE
This Section Does Not Apply

R. POWER ADJUSTMENT: LIGHTING CONTROL CREDIT (PAF)
This Section Does Not Apply

S. RATED POWER REDUCTION COMPLIANCE BY SPACE
This Section Does Not Apply

STATE OF CALIFORNIA
Indoor Lighting
NRCC-LTI-E (Created 7/18)
CALIFORNIA ENERGY COMMISSION

CERTIFICATE OF COMPLIANCE		NRCC-LTI-E
Project Name: Studio City Rec Center	Report Page:	Page 6 of 7
Project Address: 12621 Rye Street	Date Prepared:	10/31/2018

T. DECLARATION OF REQUIRED CERTIFICATES OF INSTALLATION

Table Instructions: Selections have been made based on information provided in previous tables of this document. If any selection needs to be changed, please explain why in Table E. Additional Remarks. These documents must be provided to the building inspector during construction and can be found online at http://www.energy.ca.gov/2015publications/CEC-400-2015-033/appendices/forms/NRCI

YES	NO	Form/Title	Field Inspector Pass	Field Inspector Fail
◉	○	NRCI-LTI-01-E - Must be submitted for all buildings	☐	☐
◉	○	NRCI-LTI-02-E - Must be submitted for a lighting control system, or for an Energy Management Control System (EMCS), to be recognized for compliance.	☐	☐
○	◉	NRCI-LTI-03-E - Must be submitted for a line-voltage track lighting integral current limiter, or for a supplementary overcurrent protection panel used to energize only line-voltage track lighting, to be recognized for compliance.	☐	☐
○	◉	NRCI-LTI-04-E - Must be submitted for two interlocked systems serving an auditorium, a convention center, a conference room, a multipurpose room, or a theater to be recognized for compliance.	☐	☐
○	◉	NRCI-LTI-05-E - Must be submitted for a Power Adjustment Factor (PAF) to be recognized for compliance.	☐	☐
○	◉	NRCI-LTI-06-E - Must be submitted for additional wattage installed in a video conferencing studio to be recognized for compliance.	☐	☐

U. DECLARATION OF REQUIRED CERTIFICATES OF ACCEPTANCE

Table Instructions: Selections have been made based on information provided in previous tables of this document. If any selection needs to be changed, please explain why in Table E. Additional Remarks. These documents must be provided to the building inspector during construction and must be completed through an Acceptance Test Technician Certification Provider (ATTCP). For more information visit: http://www.energy.ca.gov/title24/attcp/providers.html

YES	NO	Form/Title	Field Inspector Pass	Field Inspector Fail
◉	○	NRCA-LTI-02-A - Must be submitted for occupancy sensors and automatic time switch controls.	☐	☐
○	◉	NRCA-LTI-03-A - Must be submitted for automatic daylight controls.	☐	☐
◉	○	NRCA-LTI-04-A - Must be submitted for demand responsive lighting controls.	☐	☐
○	◉	NRCA-LTI-05-A - Must be submitted for institutional tuning power adjustment factor (PAF).	☐	☐

STATE OF CALIFORNIA
Indoor Lighting
NRCC-LTI-E (Created 7/18)
CALIFORNIA ENERGY COMMISSION

CERTIFICATE OF COMPLIANCE		NRCC-LTI-E
Project Name: Studio City Rec Center	Report Page:	Page 1 of 7
Project Address: 12621 Rye Street	Date Prepared:	10/31/2018

This document is used to demonstrate compliance with requirements in §110.9, §130.0, §130.1, §140.6, and §141.0(b)2 for indoor lighting scopes using the prescriptive path.

A. GENERAL INFORMATION

01	Project Location (city)	Studio City	04	Total Conditioned Floor Area (ft²)	11,352
02	Climate Zone	9	05	Total Unconditioned Floor Area (ft²)	0
03	Occupancy Types Within Project (select all that apply):		06	# of Stories (Habitable Above Grade)	1

☑ Office ☐ Retail ☐ Warehouse ☐ Hotel/Motel ☐ School ☑ Support Areas
☐ Parking Garage ☐ High-Rise Residential ☐ Relocatable ☑ Other (write in):

B. PROJECT SCOPE

Table Instructions: Include any lighting systems that are within the scope of the permit application and are demonstrating compliance using the prescriptive path outlined in §140.6 or §141.0(b)2 for alterations. WARNING: Changing the Calculation Method in this table will result in the deletion of data previously input. If you need to change the calculation method, please open a new form or use "Save As".

Scope of Work	Conditioned Spaces		Unconditioned Spaces	
01	02	03	04	05
My Project Consists of (check all that apply):	Calculation Method	Area (ft²)	Calculation Method	Area (ft²)
☑ New Lighting System	Area Category	11,352	Area Category	0
☐ Altered Lighting System				
Total Area of Work (ft²):	**11,352**		**0**	

C. COMPLIANCE RESULTS

Table Instructions: If any cell on this table says "DOES NOT COMPLY" or "COMPLIES with Exceptional Conditions" refer to Table D. for guidance.

	Allowed Lighting Power per §140.6(b) (Watts)						Actual Lighting Power per §140.6(a) (Watts)					Compliance Results
Lighting in conditioned and unconditioned spaces must not be combined for compliance per §140.6(b)1.	01 Complete Building §140.6(c)1	02 Area Category §140.6(c)2	03 Area Category Footnotes §140.6(c)2G (+)	04 Tailored §140.6(c)3 (+)	=	05 **Total Allowed** (Watts)	06 Total Designed (Watts)	07 Adjustments Portable Lighting §140.6(a) (-)	08 Adjustments PAF Control Credits §140.6(a)2 (-)	=	09 **Total Actual** (Watts) *Includes Adjustments	10 **05 Must be ≥ 09** §140.6
	(See Table I)	(See Table I)	(See Table K)	(See Table L)			(See Table F)	(See Table J)	(See Table R)			
Conditioned:		10,884.75			=	**10,884.75**	≥ 6,184			=	**6,184**	**COMPLIES**
Unconditioned:					=		≥			=		
Controls Compliance (See Table H for Details)												**COMPLIES**
Rated Power Reduction Compliance (See Table S for Details)												**Not Applicable**

STATE OF CALIFORNIA
Indoor Lighting
NRCC-LTI-E (Created 7/18)
CALIFORNIA ENERGY COMMISSION

CERTIFICATE OF COMPLIANCE		NRCC-LTI-E
Project Name: Studio City Rec Center	Report Page:	Page 2 of 7
Project Address: 12621 Rye Street	Date Prepared:	10/31/2018

D. EXCEPTIONAL CONDITIONS

This table is auto-filled with uneditable comments because of selections made or data entered in tables throughout the form.

No exceptional conditions apply to this project.

E. ADDITIONAL REMARKS

This table includes remarks made by the permit applicant to the Authority Having Jurisdiction.

F. INDOOR LIGHTING FIXTURE SCHEDULE

Table Instructions: Include all permanent designed lighting and all portable lighting in offices.

01	02	03		04	05	06	07	08	09	
Name or Item Tag	Complete Luminaire Description	Specialized Luminaire Types		Watts per luminaire[1]	How Wattage is determined	Total number luminaires	Exempt per §140.6(a)3	Design Watts	Field Inspector	
		Track	Portable						Pass	Fail
A	A - LED Pendant - 194w	☐	☐	194	NAB Default	18	☐	3,492	☐	☐
B	B - LED Pendant - 154w	☐	☐	154	NAB Default	4	☐	616	☐	☐
C1	C1 - LED 8' Linear - 80w	☐	☐	80	NAB Default	9	☐	720	☐	☐
C1E	C1E - LED EM 8' Linear - 80w	☐	☐	80	NAB Default	3	☐	240	☐	☐
C2	C2 - LED 6' Linear - 60w	☐	☐	60	NAB Default	6	☐	360	☐	☐
D	D - LED Downlight - 14w	☐	☐	14	NAB Default	14	☐	196	☐	☐
E	E - LED Strip light - 23w	☐	☐	23	NAB Default	16	☐	368	☐	☐
F	F - LED Strip light - 48w	☐	☐	48	NAB Default	4	☐	192	☐	☐
					Total Designed Watts CONDITIONED SPACES:			**6,184**		

[1]*NOTES: Authority Having Jurisdiction may ask for Luminaire cut sheets to confirm wattage used for compliance per §130.0(c) Wattage used must be the maximum rated for the luminaire, not the lamp.*

G. TRACK LIGHTING

This Section Does Not Apply

STATE OF CALIFORNIA
Indoor Lighting
NRCC-LTI-E (Created 7/18)
CALIFORNIA ENERGY COMMISSION

CERTIFICATE OF COMPLIANCE		NRCC-LTI-E
Project Name: Studio City Rec Center	Report Page:	Page 3 of 7
Project Address: 12621 Rye Street	Date Prepared:	10/31/2018

H. INDOOR LIGHTING CONTROLS (Not Including PAFs)

Table Instructions:
*Please include lighting controls for conditioned and unconditioned spaces in this table. When an option having a * is selected, the notes section of this table must be completed. The lighting controls section of the Compliance Summary Table on the first page will show "DOES NOT COMPLY" if the notes are left blank.*

Building Level Controls			
01	02	03	
Mandatory Demand Response §130.1(c)	Shut-off Controls §130.1(c)	Field Inspector Pass	Field Inspector Fail
Required > 10,000 SF	Whole Building: Automatic Time Switch	☐	☐

Area Level Controls

04	05	06	07	08	09	10	11	12	
Area Description	Complete Building or Area Category Primary Function Area	Area Controls §130.1(a)	Multi-Level Controls §130.1(b)	Shut-Off Controls §130.1(c)	Primary/Skylit Daylighting §130.1(d)	Secondary Daylighting §140.6(d)	Interlocked Systems §140.6(a)1	Field Inspector Pass	Field Inspector Fail
Main Lobby 100	Lobby, Main Entry	Manual ON/OFF	Dimmer	Occ Sensor	N/A	N/A	☐	☐	☐
Office 101	Office <= 250 sqft	Manual ON/OFF	Dimmer	Occ Sensor	N/A	N/A	☐	☐	☐
Gym	Sports Arena, Indoor Playing Area	Manual ON/OFF	Dimmer	Occ Sensor	N/A	N/A	☐	☐	☐
Community Room	Convention/Conference/Meeting	Manual ON/OFF	Dimmer	Occ Sensor	N/A	N/A	☐	☐	☐
Storages, Restrooms, Support	Corridor/Restroom/Support	Manual ON/OFF	Dimmer	Occ Sensor	N/A	N/A	☐	☐	☐

*NOTES: Controls with a * require a note in the space below explaining how compliance is achieved. | 13

EX: Conference 1: Primary/Skylight Daylighting: Exempt because less than 120 watts of general lighting; EXCEPTION 1 to §130.1(d)2 | Plan Sheet Showing Daylit Zones:

I. LIGHTING POWER ALLOWANCE: COMPLETE BUILDING OR AREA CATEGORY METHODS

Table Instructions: Complete the table for each area complying using the Complete Building or Area Category Methods per §140.6(b). Indicate if additional lighting power allowances per §140.6(c) or adjustments per §140.6(a) are being used.

Conditioned Spaces

01	02	03	04	05	06	
Area Description	Complete Building or Area Category Primary Function Area	Allowed Density (W/ft²)	Area (ft²)	Allowed Wattage (Watts)	Additional Allowances / Adjustments Footnotes	PAF	Portable Ltg
Lobby 100	Main Entry Lobby	0.95	320	304	☐	☐	☐
Office 101	Office (> 250 square feet)	0.75	405	303.75	☐	☐	☐
Gold Room 103	Corridor, Restrm, Stair, Support	0.6	34	20.4	☐	☐	☐
Restroom 102	Corridor, Restrm, Stair, Support	0.6	98	58.8	☐	☐	☐

Table Continued

BUREAU OF ENGINEERING
OFFICIAL RECORD

PREPARED UNDER THE SUPERVISION OF FELIX ROTH
No. 012941
Exp. 3-31-21
ELECTRICAL
STATE OF CALIFORNIA

SILVER,ROTH & ASSOCIATES INC.
CONSULTING ELECTRICAL ENGINEERS
511 SOUTH FAIRFAX AVENUE
LOS ANGELES, CALIFORNIA, 90036-3130
TEL: (323) 933-3700 / FAX: (323) 933-3874
EMAIL: sra@silverroth.com

Project Status
PROJECT ISSUE DATE: 26.APR.19
CITY OF LOS ANGELES
VERTICAL CONTROL:
HORIZONTAL

DEPARTMENT OF PUBLIC WORKS
BUREAU OF ENGINEERING

NO.	REVISION DESCRIPTION	DATE	BY

INDEX
BUILDING -
RP-300106

CITY
DATE 26.APR.19 26.APR.19 26.APR.19 26.APR.19 26.APR.19
LIC. NO.: 012941
ARCHITECTURAL DIVISION
ARCHITECT/ ENGINEER: SILVER, ROTH & ASSOC.
DESIGNED FR
DRAWN FR
CHECKED FR
APPROVED BY: MAHMOOD KARIMZADEH, AIA, DEPUTY CITY ENGINEER

SHEET TITLE 24
PROJECT STUDIO CITY
ADDRESS 12621 RYE STREET, STUDIO CITY, CA 91604

WORK ORDER
E170267B
PLAN FILE
DRAWING
E5.1
SHEET 189 OF SHEET 211

TTLB TEMPLATE REVISION DATE: 05/22/17
SHEET ISSUE
REVISION DATES (DESIGN STAGE)
FILE PATH: C:\Users\Daniel\Documents\SCRC-Project Model_ELEC_SilverRoth.rvt
THE CITY OF LOS ANGELES OR ITS OFFICERS OR AGENTS SHALL NOT BE RESPONSIBLE FOR THE ACCURACY OR COMPLETENESS OF ELECTRONIC COPIES OF THIS PLAN

PLOTTED:6/12/2019 3:14:20 PM

STATE OF CALIFORNIA
Outdoor Lighting
NRCC-LTO-E (Created 9/17) CALIFORNIA ENERGY COMMISSION

CERTIFICATE OF COMPLIANCE		NRCC-LTO-E
Project Name: Studio City Rec Center	Report Page:	Page 4 of 6
Project Address: 12621 Rye Street	Date Prepared:	10/31/2018

Calculated General Hardscape Lighting Power Allowance per Table 140.7-A

02	03	04	05	06	07	08	09
Area Description	Area Wattage Allowance (AWA)			Linear Wattage Allowance (LWA)			Total General AWA + LWA (Watts)
	Illuminated Area (ft^2)	Allowed Density (W/ft^2)	Area Allowance (Watts)	Perimeter Length (lf)	Allowed Density (W/lf)	Linear Allowance (Watts)	
Parking Lot 1	17,893	0.04	715.72	601	0.35	210.35	926.07
Parking Lot 2	6,610	0.04	264.4	370	0.35	129.5	393.9
Walkway	38,917	0.04	1,556.68	2,320	0.35	812	2,368.68
					Initial Wattage Allowance for Entire Site (Watts):		**520**
					Total General Hardscape Allowance (Watts):		**4,208.65**

J. LIGHTING ALLOWANCE: PER APPLICATION
This Section Does Not Apply

K. LIGHTING ALLOWANCE: SALES FRONTAGE
This Section Does Not Apply

L. LIGHTING ALLOWANCE: ORNAMENTAL
This Section Does Not Apply

M. LIGHTING ALLOWANCE: PER SPECIFIC AREA
Table Instructions: Please complete this table for areas using the wattage allowance per specific area type from Table 140.7-B. More than one specific area allowance may be taken in a single project, if applicable. However, multiple specific area allowances may not be taken for the exact same area on the site.

01	02	03	04	05	06	07	08	09	10
		CALCULATED ALLOWANCE (Watts)			DESIGN WATTS				
Area Description	Specific Area Type per Table 140.7-B	Specific Area (ft^2)[1]	Allowed Density (W/ft^2)	Extra Allowance (Watts)	Luminaire Name or Item Tag	Watts per Luminaire	# of Luminaires	Design Watts	Additional Allowance (Watts)
Non Sales Canopy	Non-sales Canopies/Tunnels	7,447	0.408	3,038.376	H	65	25	1,625	
							Total Design Watts for this Area:	1,625	1,625
								Total Allowance (Watts) All Areas:	**1,625**

Table Continued

STATE OF CALIFORNIA
Outdoor Lighting
NRCC-LTO-E (Created 9/17) CALIFORNIA ENERGY COMMISSION

CERTIFICATE OF COMPLIANCE		NRCC-LTO-E
Project Name: Studio City Rec Center	Report Page:	Page 5 of 6
Project Address: 12621 Rye Street	Date Prepared:	10/31/2018

[1] *FOOTNOTES: See Table 140.7-B for the rules for calculating the specific areas (ft^2) for these additional lighting allowances.*

N. EXISTING CONDITIONS POWER ALLOWANCE (alterations only)
This Section Does Not Apply

O. DECLARATION OF REQUIRED CERTIFICATES OF INSTALLATION
Table Instructions: Selections have been made based on information provided in previous tables of this document. If any selection needs to be changed, please explain why in Table E. Additional Remarks. These documents must be provided to the building inspector during construction and can be found online at http://www.energy.ca.gov/2015publications/CEC-400-2015-033/appendices/forms/NRCI

YES	NO	Form/Title	Field Inspector Pass	Field Inspector Fail
◉	○	NRCI-LTO-01-E - Must be submitted for all buildings.	☐	☐
◉	○	NRCI-LTO-02-E - Must be submitted for a lighting control system; or for an Energy Management Control System (EMCS), to be recognized for compliance.	☐	☐

P. DECLARATION OF REQUIRED CERTIFICATES OF ACCEPTANCE
Table Instructions: Selections have been made based on information provided in previous tables of this document. If any selection needs to be changed, please explain why in Table E. Additional Remarks. These documents must be provided to the building inspector during construction and must be completed through an Acceptance Test Technician Certification Provider (ATTCP). For more information visit: http://www.energy.ca.gov/title24/attcp/providers.html

YES	NO	Form/Title	Field Inspector Pass	Field Inspector Fail
◉	○	NRCA-LTO-02-A - Must be submitted for all outdoor lighting controls except for alterations where controls area added to ≤ 20 luminaires.	☐	☐

STATE OF CALIFORNIA
Outdoor Lighting
NRCC-LTO-E (Created 9/17) CALIFORNIA ENERGY COMMISSION

CERTIFICATE OF COMPLIANCE		NRCC-LTO-E
Project Name: Studio City Rec Center	Report Page:	Page 6 of 6
Project Address: 12621 Rye Street	Date Prepared:	10/31/2018

DOCUMENTATION AUTHOR'S DECLARATION STATEMENT

Documentation Author Name:	Felix Roth	Documentation Author Signature:	
Company:	SRA	Signature Date: 10/31/2018	
Address:	511 S. Fairfax Ave.	CEA/ HERS Certification Identification (if applicable):	12941
City/State/Zip:	Los Angeles, CA 90036	Phone:	323.933.9700

RESPONSIBLE PERSON'S DECLARATION STATEMENT
I certify the following under penalty of perjury, under the laws of the State of California:
1. The information provided on this Certificate of Compliance is true and correct.
2. I am eligible under Division 3 of the Business and Professions Code to accept responsibility for the building design or system design identified on this Certificate of Compliance (responsible designer)
3. The energy features and performance specifications, materials, components, and manufactured devices for the building design or system design identified on this Certificate of Compliance conform to the requirements of Title 24, Part 1 and Part 6 of the California Code of Regulations.
4. The building design features or system design features identified on this Certificate of Compliance are consistent with the information provided on other applicable compliance documents, worksheets, calculations, plans and specifications submitted to the enforcement agency for approval with this building permit application.
5. I will ensure that a completed signed copy of this Certificate of Compliance shall be made available with the building permit(s) issued for the building, and made available to the enforcement agency for all applicable inspections. I understand that a completed signed copy of this Certificate of Compliance is required to be included with the documentation the builder provides to the building owner at occupancy.

Responsible Designer Name:	Felix Roth	Responsible Designer Signature:	
Company :	Silver Roth and Associates	Date Signed: 10/31/2018	
Address:	511 S. Fairfax Ave.	License:	12941
City/State/Zip:	Los Angeles, CA 90036	Phone:	323.933.3700

STATE OF CALIFORNIA
Outdoor Lighting
NRCC-LTO-E (Created 9/17) CALIFORNIA ENERGY COMMISSION

CERTIFICATE OF COMPLIANCE		NRCC-LTO-E
Project Name: Studio City Rec Center	Report Page:	Page 1 of 6
Project Address: 12621 Rye Street	Date Prepared:	10/31/2018

This document is used to demonstrate compliance with requirements in §110.9, §130.0, §130.2, §140.7, and §141.0(b)2I for outdoor lighting scopes using the prescriptive path.

A. GENERAL INFORMATION

01	Project Location (city)	Studio City	04 Total Illuminated Hardscape Area (ft^2)	63,420
02	Climate Zone	9		

03 Outdoor Lighting Zone per Title 24, Part 1 §10-114 or as designated by Authority Having Jurisdiction (AHJ):

☐ LZ-0: Very Low - Undeveloped Parkland ☐ LZ-2: Moderate - Rural Areas ☐ LZ-4: High - Must be reviewed by CA Energy Commission for Approval
☐ LZ-1: Low - Developed Parkland ☑ LZ-3: Moderately High - Urban Areas

B. PROJECT SCOPE
Table Instructions: Include any outdoor lighting systems that are within the scope of the permit application and are demonstrating compliance using the prescriptive path outlined in §140.7 or §141.0(b)2I for alterations.

My project consists of:

01	02
☑ New Lighting System	Must Comply with Allowances from §140.7.
☐ Altered Lighting System	Is your alteration increasing the connected lighting load (Watts)? ○ Yes ○ No

FOOTNOTES: % of Existing Luminaires Being Altered = (Sum Total of Luminaires Being Added or Altered / Existing Luminaires within the Scope of the Permit Application) x 100

C. COMPLIANCE RESULTS
Table Instructions: If any cell on this table says "DOES NOT COMPLY" or "COMPLIES with Exceptional Conditions" refer to Table D. for guidance.

Calculation of Total Allowed Lighting Power (Watts) §140.7 or §141.0(b)2I — **Compliance Results**

01		02		03		04		05		06		07		08		09
General Hardscape Allowance §140.7(d)1	+	Per Application §140.7(d)2	+	Sales Frontage §140.7(d)2	+	Ornamental §140.7(d)2	+	Per Specific Area §140.7(d)2	OR	Existing Power §141.0(b)2I	=	**Total Allowed** (Watts)	≥	**Total Actual** (Watts)		**07 Must be ≥ 08**
(See Table I)		(See Table J)		(See Table K)		(See Table L)		(See Table M)		(See Table N)				(See Table F)		
4,208.65	+		+		+		+	1,625	OR		=	5,833.65	≥	5,553		**COMPLIES**
Cutoff Compliance (See Table G for Details)														**COMPLIES**		
Controls Compliance (See Table H for Details)														**COMPLIES**		

STATE OF CALIFORNIA
Outdoor Lighting
NRCC-LTO-E (Created 9/17) CALIFORNIA ENERGY COMMISSION

CERTIFICATE OF COMPLIANCE		NRCC-LTO-E
Project Name: Studio City Rec Center	Report Page:	Page 2 of 6
Project Address: 12621 Rye Street	Date Prepared:	10/31/2018

D. EXCEPTIONAL CONDITIONS
This table is auto-filled with uneditable comments because of selections made or data entered in tables throughout the form.

No exceptional conditions apply to this project.

E. ADDITIONAL REMARKS
This table includes remarks made by the permit applicant to the Authority Having Jurisdiction.

F. OUTDOOR LIGHTING FIXTURE SCHEDULE
Table Instructions: For new or altered lighting systems demonstrating compliance with §140.7 (ie Table I has expanded for input), include all luminaires being installed and any existing luminaires remaining or being moved within the spaces covered by the permit application in the Table below. For altered lighting systems using the Existing Power method per §141.0(b)2I, (ie Table N has expanded for input), include only new luminaires being installed and replacement luminaires being installed as part of the project scope (ie, do not include existing luminaires remaining or existing luminaires being moved).

Designed Wattage:

01	02	03	04	05	06	07	08	09	10
Name or Item Tag	Complete Luminaire Description	Watts per luminaire[1]	How Wattage is determined	Total number luminaires	Luminaire Status[2]	Excluded per §140.7(a)	Design Watts	Cutoff Req. >150W §130.2(b)[3]	Field Inspector Pass / Fail
G	G - LED Outdoor 20' Pole Mtd - 182w	182	NAB Default	10	New	☐	1,820	Yes	☐ ☐
G1	G1 - LED Outdoor 16' Pole Mtd - 124	124	NAB Default	17	New	☐	2,108		☐ ☐
H	H - LED Outdoor Wall Mtd - 65w	65	NAB Default	25	New	☐	1,625		☐ ☐
						Total Designed Watts:	**5,553**		

* NOTES: Selections with a * require a note in the space below explaining how compliance is achieved.
EX: Luminaire is lighting a statue; EXCEPTION 2 to §130.2(b).

G. CUTOFF REQUIREMENTS (BUG)
Table Instructions: Complete this table for fixtures >150W indicated on Table F as needing to comply with Cutoff Requirements. Maximum lumens can be found in Table 130.2-A for Uplight and Table 130.2-B for Glare by Lighting Zone.

01	02	03	04		05				06	
			Uplight Ratings (Lumens)		Glare Ratings (Lumens)				Field Inspector	
Name or Item Tag	Complete Luminaire Description	Luminaire Type[1]	High (UH)	Low (UL)	Forward Very High (FVH)	Backlight Very High (BVH)	Forward High (FH)	Backlight High (BH)	Pass	Fail

Table Continued

STATE OF CALIFORNIA
Outdoor Lighting
NRCC-LTO-E (Created 9/17) CALIFORNIA ENERGY COMMISSION

CERTIFICATE OF COMPLIANCE		NRCC-LTO-E
Project Name: Studio City Rec Center	Report Page:	Page 3 of 6
Project Address: 12621 Rye Street	Date Prepared:	10/31/2018

01	02	03	04		05				06	
			Uplight Ratings (Lumens)		Glare Ratings (Lumens)				Field Inspector	
Name or Item Tag	Complete Luminaire Description	Luminaire Type[1]	High (UH)	Low (UL)	Forward Very High (FVH)	Backlight Very High (BVH)	Forward High (FH)	Backlight High (BH)	Pass	Fail
G	G - LED Outdoor 20' Pole T	0	0	0	0	0	0	0	☐	☐
G	G - LED Outdoor 20' Pole T	0	0	0	0	0	0	0	☐	☐
	Maximum Lumens Allowed for Type I-IV:		500	500	500	500	7,500	2,500		
	Maximum Lumens Allowed for Type V and V Square:		500	500	500	500	7,500	7,500		

H. OUTDOOR LIGHTING CONTROLS
Table Instructions: Complete this table demonstrating compliance with controls requirements for all new or altered luminaires installed as part of the permit application. For alteration projects, luminaires which are existing to remain (ie untouched) and luminaires which are removed and reinstalled (wiring only) do not need to be included in this table even if they are within the spaces covered by the permit application.
When an option having a " is selected, the notes section of this table must be completed. The lighting controls section of the Compliance Summary Table on the first page will show "DOES NOT COMPLY" if the notes are left blank. For each requirement in columns 02 through 07, do not leave the field blank, instead select NA or Exempt from the dropdown list to indicate not applicable or an exemption.*

Mandatory Controls

01	02	03	04	05	06	07	08
Area Description	Motion Sensor: Incandescent>100W §130.2(a)	Shut-Off §130.2(c)1	Auto-Schedule §130.2(c)2	Motion Sensor §130.2(c)3	Sales Frontage §130.2(c)4	Façade, Ornament, Outdoor Dining §130.2(c)5	Field Inspector Pass / Fail
All outdoor lighting	NA: No Incand>100W	Photocontrol	Yes	Yes	NA: No Sales Front Ltg	No Applicable Lt	☐ ☐

*NOTES: Controls with a * require a note in the space below explaining how compliance is achieved.
EX: Not permitted by health & safety to be turned off; EXCEPTION 1 to §130.2(c).

I. LIGHTING POWER ALLOWANCE (per §140.7)
Table Instructions: Please complete this table for areas using the allowance calculations per §140.7. General Hardscape Allowance is per Table 140.7-A while "Use it or lost it" Allowances are per Table 140.7-B. Indicate which allowances are being used to expand sections for user input. Luminaires that qualify for one of the "Use it or lose it" allowances shall not qualify for another "Use it or lose it" allowance.

	01						
	"Use it or lose it" Allowance (Watts)						
General Hardscape Allowance	☐ Per Application	☐ Sales Frontage	☐ Ornamental	☑ Per Specific Area	☐ Existing Power	☐ Façade, Ornament, Outdoor Dining	☐ Sales Frontage
Table I (below)	Table J	Table K	Table L	Table M	Table N	Table O	Table P

Calculated General Hardscape Lighting Power Allowance per Table 140.7-A
Table Continued

BUREAU OF ENGINEERING

OFFICIAL RECORD

REGISTERED PROFESSIONAL ENGINEER — No. 012941 — September 2017 — Exp. 3-31-21 — ELECTRICAL — STATE OF CALIFORNIA

SILVER,ROTH & ASSOCIATES INC.
CONSULTING ELECTRICAL ENGINEERS
5 1 1 SOUTH FAIRFAX AVENUE
LOS ANGELES, CALIFORNIA, 90036-3130
TEL: (323) 933-3700 / FAX: (323) 933-3874
EMAIL: sra@silverroth.com

DEPARTMENT OF PUBLIC WORKS
CITY OF LOS ANGELES

BUREAU OF ENGINEERING
ENGINEERING
CITY OF LOS ANGELES

NO.	REVISION DESCRIPTION	DATE	BY

BUILDING -
INDEX **RP-300106**

CITY	
DATE	26.APR.19
	26.APR.19
	26.APR.19
	26.APR.19
	26.APR.19

TED ALLEN, PE
ARCHITECTURAL DIVISION
LIC. NO.: 012941
ARCHITECT/ ENGINEER: SILVER, ROTH & ASSOC.
DESIGNED FR
DRAWN FR
CHECKED FR
APPROVED BY: MAHMOOD KARIMZADEH, AIA, DEPUTY CITY ENGINEER

VERTICAL CONTROL:
HORIZONTAL

SHEET TITLE 24
PROJECT STUDIO CITY
ADDRESS 12621 RYE STREET, STUDIO CITY, CA 91604

Project Status
PROJECT ISSUE DATE: 26.APR.19

WORK ORDER
E170267B
PLAN FILE
DRAWING
E5.2
SHEET 190 OF SHEET 211

PLOTTED:6/12/2019 3:14:23 PM

THE CITY OF LOS ANGELES OR ITS OFFICERS OR AGENTS SHALL NOT BE RESPONSIBLE FOR THE ACCURACY OR COMPLETENESS OF ELECTRONIC COPIES OF THIS PLAN

FILE PATH: C:\Users\Daniel\Documents\SCRC-Project Model_ELEC_SilverRoth.rvt

TTLB TEMPLATE REVISION DATE: 05/22/17
SHEET ISSUE

REVISION DATES:
DESIGN STAGE

STUDIO CITY RECREATION CENTER
PROJECT #E170267B

TABLE OF CONTENTS

SECTION	SECTION TITLE	PAGES
	Landscape Construction Notes - General	L001
1	Colored Concrete Admixtures	L001
2	Disintegrated Granite and Soil Stabilizers	L001
3	Painting	L001-L002
4	Irrigation Systems	L002
5	Landscape Planting	L002-L003

LANDSCAPE CONSTRUCTION NOTES

GENERAL
The General Conditions and General Requirements, the latest edition and supplements of the Standard Specifications for Public Works Construction, hereinafter referred to as (SSPWC) adopted by the Board of Public Works and the City of Los Angeles including the City of Los Angeles Department of Public Works SSPWC additions and amendments (Brown Book) shall be made a part of these plans.

Website: http://eng2.lacity.org/brownbook/frame.cfm

Where conflicts occur between the General Conditions and General Requirements and the Standard Specifications for Public Works Construction, the General Conditions and General Requirements shall take precedence. Where conflicts occur between these Landscape Construction Notes and the SSPWC, these LANDSCAPE CONSTRUCTION NOTES shall take precedence.

Precedence of Contract Documents shall be in accordance with Article 7 of the General Conditions.

Subsections included within these LANDSCAPE CONSTRUCTION NOTES modify or add to the corresponding subsection (by number) of the SSPWC, latest edition with current yearly supplements; where options for materials and/or methods appear in the SSPWC, the option listed hereon shall be used.

This improvement consists only of work called for on these plans.

PLANS AND SPECIFICATIONS
The General Contractor shall be responsible for issuing a complete set of plans and specifications to all Sub-Contractors.

√ **Indicates approvals or submittals, including items to be turned over at the pre-final. All approvals and submittals shall be transmitted to the Project Manager.**

√√ **Indicates required field inspections with the Bureau of Contract Administration (BCA) Inspector and the Project Manager. Notify all party's three (3) days prior to the required inspection.**

√ **SCHEDULE OF WORK**
The Contractor shall submit a Schedule of Work for approval to the Project Manager prior to the commencement of work. The Project Manager, Contractor and Department of Recreation & Parks (RAP) Maintenance Personnel shall coordinate the Contractor's schedule of work with ongoing RAP maintenance of the facility outside the work area and the Contractor's maintenance of the area within the work area, as defined in the maintenance portion of the Landscape Planting Section. The Contractor shall schedule all work in accordance with the General Requirements Article 18. The work area shall be as defined on the Title Sheet, or as indicated on the Plans by means of a contract limit line.

√√ **JOB START MEETING**
The Contractor shall schedule a Job Start Meeting with the Project Manager after receipt of the Notice To Proceed. This meeting shall include the following participants: the Project Manager, Bureau of Contract Administration (BCA) Inspector, Landscape Architect, and Region Maintenance personnel, prior to the commencement of meeting to review the content of the plans and discuss the coordination of the project with the Department's operations at the project site. The pre-construction meeting can be held at the same time as the Job Start Meeting at the Contractors discretion.

√√ **INSPECTIONS**
All work and materials are subject to inspection and approval by the Project Manager or his designer. Any work done without proper inspection will be subject to rejection per Section 2-11 of the Standard Specifications for Public Works Construction.

The Contractor shall notify the Bureau of Contract Administration (BCA) Inspector and Project Manager three (3) days prior to requested date of inspection of the following for approval:

√√**1.** **ROUGH GRADING:** When forms have been set, to approve alignment. Offsets or vertical controls shall be verifiable in the field, or be provided in grade sheet form, and submitted to the Project Manager for approval prior to the inspection.

√√**2.** **TREE TAGGING:** Tagging of 24" box or larger trees at the grower with Recreation and Parks tags. This inspection will be for compliance with the caliper, height and spread requirements if given on the plant legend and general health, structure and appearance of plants. See Planting section of Landscape Construction Notes.

√√**3.** **ON-SITE PLANT MATERIAL INSPECTION:** Inspection of all plant materials under 24" box size upon delivery to the job site. This inspection will be for compliance with the caliper, height and spread requirements if given on the plant legend and for the general health, structure and appearance of plants. The Contractor shall also stake all tree planting locations at this time for review and approval by the Project Manager. See Planting section of Landscape Construction Notes.

√√**4.** **IRRIGATION MAINLINE PRESSURE TEST:** The pressure test shall take place under the direction of the BCA Inspector, per the Irrigation section in the Landscape Construction Notes.

√√**5.** **IRRIGATION COVERAGE TEST:** After installation of heads and lateral lines etc., entire irrigation system shall be tested for coverage per the Irrigation section of the Landscape Construction Notes. The BCA Inspector, Project Manager, Contractor and Recreation and Parks Regional maintenance staff shall be notified three (3) days before the scheduled test.

√√**6.** **FINISH GRADE REVIEW:** For all finish grades in planting areas following rolling in turf areas and prior to landscape container planting.

√√**7.** **PRE-FINAL INSPECTION**
Pre-final inspection shall be in accordance with Article 46 of the General Conditions.

√√**8.** **CONTRACT FINAL INSPECTION**
Contract final inspection shall be in accordance with Article 47 of the General Conditions.

√√**9.** **IN-PLANT INSPECTION:** Contractor shall be responsible for scheduling all in-plant inspections with the Bureau of Contract Administration plant inspection. In-plant inspection shall be required, but not limited to, the following items:

1. Galvanizing
2. Grates and frames
3. Portland cement concrete & base
4. Asphalt concrete and base
5. Fabrication of tubular steel fencing
6. Fabrication of tubular steel fencing
7. Painting of tubular steel fencing
8. Fabrication of "Rino" gates
9. Painting of "Rino gates

√ **MATERIALS SUBMITTAL**
The Contractor shall make required submittals in accordance with Article 10 of the General Requirements.

√ **SUBSTITUTIONS AND "OR EQUAL" SUBMITTAL**
The Contractor shall make substitution submittals in accordance with Article 11 of the General Requirements.

√ **RECORD DRAWINGS (AS-BUILTS) SUBMITTALS**
Record drawings shall be in accordance with Section 01783 of the General Requirements.

Irrigation record drawings shall include the following:

Dimension the following locations from two permanent points of reference (building corners, sidewalks, road intersections, etc.):
a. Connection to existing water lines
b. Connection to existing electrical power
c. Gate valves
d. Mainline routing and/or directional turns (dimension maximum 100 feet along routing).
e. Remote control valves
f. Air and pressure relief valves
g. Master valves/flow sensors
h. Control wire routing
i. Quick coupling valves
j. Lightning protection (rod, plate, etc.)
k. Pull boxes
l. Irrigation controllers
m. Backflow prevention units

DEPARTMENT OF PUBLIC WORKS STANDARD PLANS
The following Department of Public Works Standard Plans are to be included as a part of these plans:

NUMBER	TITLE
S-440-3	Driveways
S-442-3	Curb Ramps

SSPWC
2012 Edition of the Greenbook
2014 Cumulative supplement to the SSPWC
Website: http://eng.lacity.org/techdocs

√ **LAYOUT OF WORK, GRADE SHEET APPROVAL**
All spot elevations, grading contour lines, and grades shown on the plans for grading, pavement and drainage improvements shall be staked by a California licensed Land Surveyor provided by the Contractor at no additional cost to the City. Grade stakes shall be a minimum size of 1" x 2" and shall be driven a minimum of 12" into ground; each grade stake shall be protected by a flagged lath projecting 24" above ground; grade stakes disturbed by on-site activities shall be reset by the Surveyor. If specified on the plan the Contractor shall have his surveyor provide grade sheets. The grade sheets shall be submitted to the Project Manager for approval one week in advance of any grading operations.

UNDERGROUND SUBSTRUCTURES
The construction plans provided to the Contractor will show existing on-site underground substructures to the extent of the Department's records. Service lines from other public utilities, including the Department of Water and Power shall be located by notifying **UNDERGROUND SERVICE ALERT at 1 - (800) 422-4133** prior to commencing any excavation.

TREE PROTECTION – EXISTING TREES
All trees to remain in place shall be protected using the following guidelines:

TREE PROTECTION SPECIFICATIONS
These tree protection specifications shall be followed to protect all trees whose dripline is encroached upon either directly or indirectly by construction within City parks.

ANY FAILURE BY THE CONTRACTOR TO ADHERE TO THE REQUIREMENTS SPECIFIED BELOW WILL RESULT IN THE SUSPENSION OF ALL CONSTRUCTION ACTIVITIES, TO BE DONE AT THE CONTRACTOR'S EXPENSE. THE CONTRACTOR SHALL BE RESPONSIBLE FOR REPLACEMENT OF OR PAYMENT FOR ANY TREES DAMAGED THROUGH NON-COMPLIANCE WITH THESE SPECIFICATIONS. THE MONETARY OR REPLACEMENT VALUE OF IMPACTED TREES WILL BE DETERMINED BY A RECREATION AND PARKS (RAP) ARBORIST OR BY A RAP APPROVED ISA CERTIFIED ARBORIST.

A Recreation and Parks Arborist shall be invited to the Job Start Meeting and also notified 48-hours prior to construction. Contact Steve Dunlap (213) 485-4826.

All trees that occur within the area of work, as shown on the plans, and *NOT* specifically designated for removal, shall be protected by the following means:

1. **Defining the Tree Protection Zone (TPZ)** - The **radius** (not the diameter) of the TPZ, measured from the outside of the tree trunk, shall be calculated according to the following:
   (a) **Single trunk trees -** multiply the trunk diameter in inches, measured 4.5' above grade, by 1.5 feet.
   (b) **Multi trunk trees -** multiply the sum of the diameters of all trunks in inches, measured 4.5' above grade, by 1.5 feet.
   (c) **Palm trees -** 5' from the base of the trunk.
   (d) **If a TPZ is delineated on the plans, the size and shape shown on the plans shall supersede the above requirements.**

1. The contractor shall install a 5' high temporary chain link fence with one pedestrian access gate along the boundary of the TPZ. See detail for temporary chain link fence on detail sheet.

2. The contractor shall provide one sign per each 20 lineal ft. of fence surrounding the TPZ indicating that fencing shall not be removed. See TPZ sign detail.

1. No work is permitted within the TPZ without the approval of: 1) the project Landscape Architect, 2) the Project Manager, and 3) RAP Forestry staff. Any work authorized by RAP Forestry staff within the TPZ must be done in accordance with the recommendations of RAP Forestry and under the supervision of a Monitoring Arborist. The Monitoring Arborist shall be supplied by the Contractor at his own expense, and be an ISA Certified Arborist or a Registered Consulting Arborist with verifiable experience in protecting trees. The Monitoring Arborist must be approved by RAP Forestry prior to commencement of work.

3. Within the TPZ, the contractor shall adhere to the following requirements, including, but not limited to:
   (a) No stockpiling or storage of any material, debris, or soil.
   (b) No storage of any construction equipment.
   (c) No vehicular access.
   (d) No un-approved trenching, excavation or disturbance of soil will be allowed.
   (e) No objects of any kind shall be attached to tree trunks.
   (f) For any approved excavation or trenching, no cutting of roots over 2" diameter will be allowed. Contractor shall use a pneumatic drill (a.k.a. "air spade") to excavate under woody roots larger than 2" in diameter. If any roots are unintentionally severed, remedial cuts are to be made under the supervision the Monitoring arborist, and soil backfilled immediately.

4. Within the boundaries of the construction zone (including the TPZ), the contractor shall be responsible for mitigating construction-related dust accumulation on all trees by spraying the trunks, limbs, and foliage with water to a maximum height of 30 feet during the months of April through November, at monthly intervals.

5. Beyond the TPZ, the contractor shall also be responsible for protecting all existing trees to remain in place within the boundaries of the construction zone, including vehicular access areas, lay down areas, and any other areas impacted by construction activities. Any damage to trees in these areas shall also be subject to the same monetary or replacement requirements specified below. Any necessary root cutting in this area must be approved in advance by either RAP Forestry or by a RAP approved ISA certified arborist employed by the Contractor. See also the General Conditions for any damage done by the contractor to landscaping or other park amenities that fall outside the boundaries of the construction zone.

6. Irrigation to all existing landscaping/trees NOT specifically designated for removal shall be kept in operation for the duration of the project. Contractor shall be responsible for hand watering all impacted trees if necessitated by temporary shutdowns to or demolition of existing irrigation systems. Trees are to be irrigated deeply and as often as required such that soil moisture is detectable at a minimum depth of 18" using a soil probe.

7. Upon completion of all trenching, grading, excavation and soil preparation work, contractor shall remove all items installed to protect trees during the construction process with approval of the Project Manager.

8. Any of the following Southern California native tree species fall under Ordinance No. 177404 of the Los Angeles Municipal Code:
   (a) Oaks, including Valley Oak (*Quercus lobata)*, California Live Oak (*Quercus agrifolia),* or any other tree of the oak genus indigenous to California but excluding Scrub Oak *(Quercus dumosa);*
   (b) Southern California Black Walnut *(Juglans californica* var. *californica);*
   (c) Western Sycamore *(Platanus racemosa);*
   (d) California Bay *(Umbellularia californica).*

Contractor shall comply with the requirements of the ordinance found at: http://cityplanning.lacity.org/Code_Studies/Other/ProtectedTreeOrd.pdf.

DAMAGES
If a tree that is designated to remain is removed or caused to be irreversibly damaged as determined by the Recreation and Parks Arborist, install a replacement tree matching in size, quality and variety using an installer designated by the Recreation and Parks Arborist. If an acceptable replacement tree is not available, pay damages to the City for the value of the damaged tree as assessed by the tree value formula in the ISA Guide for Establishing Value of Trees and Other Plants.

1. COLORED CONCRETE ADMIXTURES

GENERAL
Section includes: Colored concrete admixtures for concrete paving.

√ **SUBMITTALS**
Data: Manufacturer's data for coloring pigments.

QUALITY ASSURANCE
All other requirements of the Green Book govern the work of this Section.

MATERIALS
Coloring pigments for ready-mix concrete: ASTM C 979, pre-measured sacks of Davis Color, (800) 800-6856, or approved equal of the color as noted on the plans. Verify pigment compatibility with other admixtures used with the other concrete ingredients.

CONCRETE MIX
Comply with the provisions of the Green Book, the following, and the coloring admixture manufacturer's printed recommendations. Use ready-mixed concrete conforming to ASTM C 94; no job-mixed concrete allowed. Establish color control procedures at ready-mix plant and site to assure concrete of uniform color throughout, and matching approved finish sample panel. When pigments are batched from bags, always use a whole number of bags per truck. When more than one truckload of concrete is required, use the same size truck for all loads.

2. DISINTEGRATED GRANITE WITH STABILIZER

MATERIALS

DISINTEGRATED GRANITE
Disintegrated granite shall be referred to by the abbreviation (D.G.), or referred to as decomposed granite. All disintegrated granite shall consist of inert materials that are hard and durable, with all stone free from surface coatings and deleterious materials. All Disintegrated granite material used within the project shall be of uniform color and consistency throughout.

Gradation requirements shall be as follows:

Sieve Designation	% Passing	Sieve Designation	% Passing
3/8 inch	100	No. 30	40-50
No. 4	95-100	No. 50	25-35
No. 8	75-80	No. 100	20-25
No. 16	55-65	No. 200	5-15

The portion of D.G retained on the no. 4 sieve shall have a maximum percentage of wear of 50 at 500 revolutions as determined by AASHTO T96-77.

The portion passing a No. 40 sieve shall have a maximum liquid limit of 25 and maximum plasticity index of 7 as determined by AASHTO T89-81 and AASHTO T90-81, respectively.

Dense graded crushed stone base material shall be furnished and installed as required to the depth indicated on plans.

SOIL STABILIZER
The stabilizer shall be a natural, non-toxic, non-staining, colorless, odorless, organic powder consisting of 95% Psyllium with 70% Mucilloid content that binds D.G. screenings. The stabilizer shall be as manufactured by Stabilizer Solutions Inc., (800) 336-2468, or an approved equal.

METHODS

√√ **SAMPLES AND SUBMITTALS**
Contractor shall construct a 48" square sample of the finished pathway surface and material as directed by the Project Manager onsite a minimum of 14 days prior to installation of paving surface represented by sample. Contractor shall continue to construct samples as necessary until an acceptable sample is approved by the Project Manager. The approved sample shall be the project standard for texture, color, and workmanship and shall be retained onsite until construction is complete and approved.

BASE MATERIAL
Make any corrections required to compacted base material to meet elevations shown on drawings. Pre-soak base material with water prior to installing Stabilized D.G. material.

BLENDING
Stabilizer shall be thoroughly pre-mixed with D.G. material at the rate of 15 lbs. per ton. Stabilizer shall be mechanically mixed per manufacturer's recommendation using an approved mechanical blending unit prior to delivery to the site.

PLACEMENT
Stabilized D.G. material shall be placed on prepared base material, and raked smooth to specified cross-section, with adequate material to provide the specified depth after compaction. Thoroughly moisten stabilized aggregate mixture with 25-45 gallons of water per ton. Before compacting, contractor shall wait a minimum of 6 hours, or such time that the material is able to accept compaction from a 1 to 5 ton roller without plowing or separation. Compact the material as specified above, making 3 to 4 passes. ***Do not use vibratory units***.

WATERING
After compaction, water the surface area lightly, so as not to cause surface disturbance or erosion.

PROTECTION
Contractor shall prevent ALL TRAFFIC of wheeled vehicles or construction implements on the finished stabilized D.G. surface for a minimum of 72 hours, or until the material is uniformly dry and firm to the full depth, with no soft areas or loose material on the surface.

√√ **INSPECTION**
Finished surface shall be uniform and solid, with no evidence of chipping or cracking. Dried, compacted paving material shall be firm to full depth with no soft areas. Loose material shall not be present on the surface.

3. MISCELLANEOUS METAL CONSTRUCTION

MATERIALS

STEEL SHAPES
All structural steel shapes shall be as specified in the applicable detail.

√√ **GALVANIZING**
Where called out, metal products shall be hot dipped galvanized in accordance with **TABLE 210-3.2(A)** of the SSPWC.

√√ **MANUFACTURER'S CERTIFICATE OF COMPLIANCE**
The manufacturer of the Chain link fabric, fence posts, rails and braces shall provide the Contractor a Certificate of compliance for each shipment sent to the project site. The Certificate shall state that the materials delivered conform the specification for materials as described in these Landscape Construction Notes. The Certificate of Compliance shall be delivered to the Project Manager and BCA Inspector before any fencing materials are installed at the project site.

REPAIRING OF DAMAGED GALVANIZED SURFACES
Galvanized surfaces which have been damaged in transport or during installation shall be re-coated using the metalizing process or zinc oxide, zinc dust paint per Section 210-3.5 of the Standard Specification.

TUBULAR STEEL SHAPES
Cold formed shapes for tubular steel fencing shall conform to ASTM A 500, Grade B, in the size and wall thickness shown on the plans and details. Unless specified on the plans all post and rails shall be 3/16" thick. All pickets for fencing shall be minimum 11 gauge.

√√ **TUBULAR STEEL WELDING**
Shall conform to the AWS code for procedures, appearance and quality. All welds shall be ground smooth. All fabricated metal fencing panels shall be shop assembled and welded.

√√ **PAINTING (TUBULAR STEEL AND CHAIN LINK FENCING WHEN REQUIRED)**
"Factory" coated tubular steel fencing or chain link fencing shall be exempted from this requirement. All other shop fabricated tubular steel fencing or fencing constructed on site shall be painted in accordance with the requirements for painting "Ferrous Metal (Non-galvanized) Surfaces" below. The two finish coats shall be black unless otherwise specified.

METHODS

TUBULAR STEEL PAINTING
Prior to priming and painting, all steel shall be made free of loose mill scale, rust, oil and grease. Welds shall be smoothed by grinding. Damage to "factory" coated tubular steel or chain link fencing shall be repaired after installation by sanding damaged paint surfaces and by applying one coat of manufacturer specified primer and two new coats of specified color coat.

4. PAINTING

MATERIALS

Paint systems, catalog names, and product numbers listed below are based on products of Dunn-Edwards Corporation. This shall be considered the standard of quality against which the Project Manager will judge equivalency. Equivalent materials from alternate manufacturers will be considered as an approved equal. Contractor's material submittal for proposed alternate must include complete material specifications from manufacturer. Paint systems described below are for specific surfaces as indicated. In addition to the information provided herein, paint materials shall also be governed by the requirements set forth in section 210-1 of the SSPWC.

Ferrous Metal Tubular Shapes (Non-Galvanized), Semi-Gloss

Painting Sequence	Finishing Schedule	Recoat And Drying Time	Coverage At Required Wet Film Thickness	Required Wet Film/Dry Film Thickness
1st coat: Synthetic alkyd white corrosion inhibiting primer	Corrobar (43-5)	Min. 24 hrs. Max. 72 hrs.	450 square feet per gallon	3.5 wet mils; 2.0 dry mils
2nd coat: Semigloss enamel acrylic latex exterior enamel	Permasheen (W 901)	Dry to touch: 30 min.; Recoat: 4 hrs.	375 square feet per gallon	4.2 wet mils; 1.5 dry mils
3rd coat: Semigloss enamel acrylic latex exterior enamel	Permasheen (W 901)	Dry to touch: 30 min.	375 square feet per gallon	4.2 wet mils; 1.5 dry mils

BUREAU OF ENGINEERING
OFFICIAL RECORD

THE CITY OF LOS ANGELES OR ITS OFFICERS OR AGENTS SHALL NOT BE RESPONSIBLE FOR THE ACCURACY OR COMPLETENESS OF ELECTRONIC COPIES OF THIS PLAN SHEET.

TEMPLATE SHEET REVISION DATE: 08/2014
REVISION DATE: 5/15/2019 10:50 AM FILE: Q:\IN-HOUSE-DESIGN\STUDIO CITY GYMNASIUM (RL)\18_DESIGN\LANDSCAPE\WORKING CDS\XREF\TITLEBLOCK_TTLBLOCK.DWG

REVISION DATES (DESIGN STAGE ONLY)

BUREAU OF ENGINEERING
CITY OF LOS ANGELES

BUILDING NO.
INDEX NO. - RP-300106

NO.	REVISIONS:	DATE:	BY:

LANDSCAPE ARCHITECT ★ LICENSED ★ STATE OF CALIFORNIA
No. 3060
Signature
Date
Renewal: Date
Original Issue Date

CITY ENGINEER
TED ALLEN, PE
ARCHITECTURAL DIVISION

	DATE:
ARCHITECT: RICHARD W. FISHER LIC. NO. 3060	04/30/19
DESIGNED BY: RICHARD W. FISHER	04/30/19
DRAWN BY: GREG MOESER	04/30/19
CHECKED BY: JANE ADRIAN	04/30/19
APPROVED BY: MAHMOOD KARIMZADEH, A.I.A.,DEPUTY CITY ENGINEER	04/30/19

DEPARTMENT OF PUBLIC WORKS
CITY OF LOS ANGELES

CLIENT: DEPARTMENT OF RECREATION AND PARKS
GENERAL MANAGER: MICHAEL A. SHULL

SHEET TITLE: LANDSCAPE CONSTRUCTION NOTES, SHEET 1

PROJECT: STUDIO CITY GYMNASIUM

ADDRESS: 12621 RYE STREET
STUDIO CITY, CA 91604

WORK ORDER NO.
E170267B

PLAN FILE NO.

DRAWING NO.
L001

SHEET 191 OF SHEETS 211

PLOTTED: 5/15/2019 10:52 AM

Non ferrous metals (Galvanized steel, Aluminum), Semi-Gloss

Painting Sequence	Finishing Schedule	Recoat And Drying Time	Coverage At Required Wet Film Thickness	Required Wet Film/Dry Film Thickness
Pre-coat: galvanized steel only. Acid etch*	Galva-etch (GE 123)	n/a	n/a	n/a
1st coat: Alkyd primer	Galv-Alum (QD 43-7)	Dry to touch: 30 min.; recoat: 2 hrs. † Max. 48 hrs.	350 square feet per gallon	4.6 wet mils; 2.0 dry mils
2nd coat: Synthetic alkyd white corrosion inhibiting primer	Permasheen (W 901)	Dry to touch: 30 min.; Recoat: 4 hrs.	375 square feet per gallon	3.5 wet mils; 2.0 dry mils
3rd coat: Semigloss enamel acrylic latex exterior enamel	Permasheen (W 901)	Dry to touch: 30 min.	375 square feet per gallon	4.2 wet mils; 1.5 dry mils

* Galva-etch is a water reducible acid pre-treatment for galvanized metals. Do not use on aluminum.

† Recoat time for Galv-Alum is 2 hours if material is sprayed, 16 hours if brushed or rolled. Second coat must be applied within 48 hours

METHODS

GENERAL
Refer also to section 310-1of the SSPWC.

COLOR SPECIFIED
Colors shall be selected from color chip samples provided by manufacturer of paint system approved for use by the Project Manager.

CONDITION OF SURFACES TO BE PAINTED
Contractor shall verify condition of surfaces to be painted prior to commencement of painting work. Work of other trades that been left or installed in a condition that is not suitable to receive paint, stain, or other specified coatings shall be immediately called to the attention of the Project Manager. Painting of defective or unsuitable surface implies acceptance of the surfaces.

PROTECTION OF EXISTING WORK
The Contractor shall take all necessary precautions to protect previously installed work and materials which may be affected by work. Items to be protected include, but are not limited to, turfgrass, shrubs, trees, ground cover, prefinished surfaces, and adjacent surfaces. Contractor shall furnish at his expense sufficient drop cloths, shields, and other protective devices necessary to prevent spray or splatter from fouling surfaces not being painted. Contractor shall be responsible for protecting equipment and fixtures from damage resulting from use of fixed, movable and hanging scaffolding, planking and staging, (310-1.4)

PROTECTION OF NEW PAINTING
"WET PAINT" signs, barricades, and such other devices as are required to protect newly finished surfaces shall be provided. Contractor shall be responsible for removal of signs protective materials, and temporary protective wrappings provided by others for protection of their work after completion of painting operations.

SURFACE PREPARATION, GENERAL
The Contractor shall perform preparation and cleaning procedures in strict accordance with coating manufacturer's instructions for each substrate condition, (310-2)

√ **SURFACE PREPARATION FOR GALVANIZED SURFACES**
Galvanized surfaces shall be prepared for painting in accordance with section 310-3 of the SSPWC.

APPLICATION
The Contractor shall apply painting and finishing materials in accordance with the manufacturer's printed instructions. Application methods and techniques that are best suited for the materials and surfaces to which coatings are being applied shall be used, (310-5)

The number of coats specified is the minimum that shall be applied. All undercoats shall be tinted to the approximate color of the finish coat. The Contractor shall apply additional coats when undercoats, stains, or other conditions show through the final paint coat, until paint film is of uniform finish, color and appearance.

Each material shall be applied at not less than the manufacturer's recommended spreading rate and mil thickness. The total dry-film thickness of coatings shall not be less than 1.2 mils for each required coat.

CLEANING, TOUCH-UP AND REFINISHING
The Contractor shall remove all spattering, spots and blemishes caused by work done throughout the work period. Upon completion of painting, the Contractor shall remove all rubbish, paint cans and accumulated materials resulting form work and dispose of off site. All areas of work shall be left in a clean, orderly condition. Runs, sags, misses, holidays, stains, or any other defects in the painted surfaces, including inadequate coverage and mil thickness, shall be satisfactorily touched up, refinished, or repaired a necessary to produce a result satisfactory to the Project Manager.

5. IRRIGATION SYSTEMS

GENERAL
All irrigation system components shall comply with local code requirements for recycled water irrigation systems, and notes on civil composite utility plan.

MATERIALS

SOLVENT WELDED PLASTIC PIPE
Schedule 40 PVC plastic pipe shall be used for pipe sizes up to and including 2-1/2" diameter on both the discharge and supply side of control valves, (800-2.1.3). Class 200 PVC plastic pipe shall be used for pipe sizes from 3" up to and including 6" diameter.

RESTRAINED PLASTIC PIPE
For Irrigation main lines, Class 200 PVC gasketed pipe shall be used for pipe sizes of 3" up to and including 6" diameter.

DUCTLE IRON FITTINGS FOR RESTRAINED PLASTIC PIPE
Fittings shall be manufactured of ductile iron, Grade 65-45-12 in accordance with ASTM A536. Fittings shall have deep bell push-on joints with gaskets meeting ASTM F477.

GASKET LUBRICANT
Push on fitting joint lubricant shall be non-toxic, odorless, tasteless and shall not support bacteria. Use "Seal Lube", SK#87710 by IPS Weldon Corporation or equal.

VALVE TO PIPE RESTRAINTS
Valve to pipe restraint shall consist of ductile iron (ASTM A536) grip rings with machined serrations and ductile iron restraint rods. The ring that grips the pipe shall meet the requirements of UNI-B-13-94. The restraint rod nuts shall be made from low alloy steel to AWWA/ANSI C111/A21.11 or ductile iron to ASTM A536.

FITTING TO PIPE RESTRAINTS
Fitting to pipe restraint shall allow the full rating of the pipe on which it is use. Grip rings and restraint structures shall be made of ductile iron to ASTM A536. Grip ring serrations (gripping features) shall be fully machined or cast. Clamp bolts and nuts shall meet or exceed ASTM A307.

PIPE TO PIPE RESTRAINTS
Pipe to pipe restraints shall allow the full rating of the pipe on which it is used. Grip rings and bell rings shall be made of ductile iron to ASTM A536. Grip ring serrations (gripping features) shall be fully machined or cast. Restraint rod nuts shall be of low alloy steel to AWWA/ANSI C111/A21.11. Clamp bolts and nuts shall meet or exceed ASTM A307.

REMOTE CONTROL VALVES
All remote control valves shall be electrically operated with body of cast brass or bronze construction, (800-2.2.4) and installed per details.

√ **POP-UP SPRAY HEADS**
The pop-up spray head body shall have a 6" or 12" pop-up stroke. The body of the spray head shall be constructed of corrosion and UV-resistant, heavy-duty A.B.S. The spray head body shall have a factory-installed drain check valve capable of checking up to 10 feet in elevation change. The spray head body shall have a standard pressure-regulating device as an integral part of the pop-up riser maintaining a constant nozzle outlet pressure of 30 or 45 PSI with inlet pressures of up to 100 PSI. Nozzles shall be matched precipitation rate, fixed spray or multiple-stream, rotating type series with adjustable radius from 10' to 30', and arcs adjustable from 45 to 360 degrees.

√ **POP-UP TURF ROTORS**
The body of the rotor head shall be constructed of corrosion and UV-resistant, heavy-duty A.B.S. The rotor head body shall have a factory-installed drain check valve capable of checking up to 10 feet in elevation change. The full or part-circle rotor head shall be a single stream, water lubricated, gear drive type capable of both full circle and part circle operation in the same unit. The part-circle mode shall have adjustable arc coverage of 50 to 330 degrees. The rotor head shall have a screen attached to the drive housing to filter inlet water, protect the drive from clogging and simplify its removal for cleaning and flushing of the system. The rotor head body shall have a 1" (26/34) female (NPT or BSP) bottom inlet. The rotor head shall have a standard rubber cover which designates each adjustment opening from the top. Pop-up height as measured from the top of the cover to the centerline of the nozzle orifice shall be at least 5 inches. The rotor shall have a stainless steel covered nozzle turret and riser stem. The riser stem shall be tapered and conform to the standard plastic riser in all other ways.

IRRIGATION WIRING

Irrigation wiring will be 2-wire or conventional wiring as noted per plans for different controllers.

2-WIRE SYSTEM WIRING

Connection between the automatic controller(s) and the remote control valves shall be made with polyethylene double-jacketed or UF-B UL PVC double-jacketed two-conductor solid core designed for direct burial with insulation 3/16 inch(.060") thick, high density, sunlight resistant incased in an outer jacket of Polyethylene or PVC conforming to ICEA S-GL-402 or NEMA WC5, having a minimum wall thickness of .045 inches. Two-wire Polyethylene 'twisted' cable and single strand 14 gauge PVC irrigation wire are not acceptable.

2-WIRE CONTROL WIRE SIZING
Standard wire lengths for straight line installation i.e. wire distance to the furthest device without any loop:

Wire Size(gauge)	**#14**	**#12**
Total loop Wire Length	10,000'	14,800'
Distance to furthest valve	5,000'	7,400'

CONVENTIONAL IRRIGATION WIRING

Connection between the automatic controller(s) and the remote control valves shall be made with direct burial 14 gage, AWG-UF, 600 volt, copper wire. Wires shall be provided in the following colors: red, yellow, blue, green, orange, tan, purple, pink, brown, gray, and white.

CONVENTIONAL WIRING - CONTROL WIRE CONNECTIONS
Control wire connections shall be made with 3-M brand of DBY or DBR Direct Burial Splice kits, or approved equal. The splice kit shall consist of a one-piece malleable plastic bulb body with internal locking fingers, filled with re-enterable gel sealant and a Scotchlok Electrical Spring Connector. Materials shall be as follows:

- Connector shall be a flame retardant PVC insulator with a steel spring and shell within. Connector shall be a non-crimping system
- Tube material shall be clear see-through polypropylene.
- Gel material shall be hixotropic calcium organic complex.

Wire sizes and numbers of wires shall be as shown below:

CONNECTOR	COLOR	NO. AND SIZE OF WIRE
3M Model DBY	Yellow	Max. 4-12 gage UF wires
3M Model DBR	Red	Max. 3-14 gage UF wires

√ **QUICK COUPLING VALVES AND ASSEMBLIES**
Quick couplers shall be 1" i.p.s., two piece, brass or bronze construction equipped with a cover, unless otherwise specified on plans. The Contractor shall provide one quick coupler key with hose swivel for each five quick couplers installed. Contractor shall supply a minimum of one quick coupler key with hose swivel, (800-2.2.6) and shall be installed per details.

√ **VALVE BOXES**
Valve boxes shall be plastic with locking cover.

For Remote Control Valves:
The dimensions of the box shall be 21.8 inches by 16.6 inches, Model VB-STD-H by Rainbird, or approved equal. The lid shall be permanently embossed "RCV", Paint is not acceptable. "Brand" lids with controller station number.

For Quick Couplers and Gate Valves:
The dimensions of the box shall be 13.75 inches bottom diameter and 10" top diameter. Model VB-10RND-H, by Rainbird, or approved equal. The lid shall be permanently embossed "GV" for gate valves and "QC" for quick coupler valves. Paint is not acceptable.

Boxes are to be installed per the applicable details.

√ **DOMESTIC WATER LINES FOR DRINKING FOUNTAINS**
Install water piping in accordance with the latest edition of the Uniform Building Code and all local ordinances. **Prior to allowing human consumption of water from newly installed drinking fountains the contractor shall perform domestic sterilization procedures as indicated in applicable details and meet standards indicated. New drinking fountains shall be turned off or otherwise made inoperable until this testing is successfully accomplished.**

Domestic Cold Water Piping **ABOVE GRADE**: Piping shall be ASTM B88 Type "L" seamless hard drawn copper tubing with ANSI B 16.22 wrought copper fittings. Joints shall be made up with lead-free, nickel bearing alloy solder such as Harris Bridget.

Domestic Cold Water Piping **BELOW GRADE**: Piping shall be ASTM B88 Type "K" seamless hard drawn copper tubing with ANSI B 16.22 wrought copper fittings. Joints shall be made up with lead-free, nickel bearing alloy solder such as Harris Bridget.

METHODS

EXISTING IRRIGATION SYSTEM REPAIR - GENERAL
The Contractor shall reconstruct any existing irrigation lines that are to remain in service, when they interfere or are damaged by construction. Reconstruction of the irrigation lines shall conform to the applicable sections of the Landscape Construction Notes using all new materials except existing irrigation heads, which may be reinstalled. When modifications to an existing irrigation system are part of the project, the Contractor shall verify the operation of all existing irrigation controllers, remote control valves, quick coupling valves, and irrigation heads prior to the commencement of work. The Project Manager shall be notified, in writing, of any inoperable equipment encountered.

√√ Maintain 12 inches of cover over all lateral lines and 24 inches of cover over mainlines 2" and smaller in diameter. Mainlines 3" and larger in diameter shall have 30" of cover over the top of the pipe. Reconnect existing remote control valves with approved watertight connectors, (801-5.4).

BACKFLOW DEVICE INSTALLATION AND CERTIFICATION
The Contractor shall obtain certification of the backflow device and submit two copies of the certification to the Project Manager at the Operational Final. The backflow certification shall be made on the County Health Department standard form and filed with the County Health Department, Cross Connection Section, Room 150, 2525 Corporate Place, Monterey Park, CA, 91754. The contractor shall paint all backflow prevention devices above ground with two coats of forest green enamel. Mask all identification tags prior to painting, (801-5.4). After certification remove all test cocks, replace with threaded brass plugs, and deliver test cocks to Project Manager.

NEW PIPELINE INSTALLATION - GENERAL
√√ When pipelines run parallel they shall be separated horizontally by a minimum distance of 12". When pipelines cross each other they shall be separated vertically by a minimum distance of 3".

√√ All PVC mainline shall be installed with a direct burial #12 AWG Solid steel core soft drawn tracer wire, with 30 mil polyethylene jacket. Color shall be "blue" for irrigation pipelines and "purple" for recycled water (non-potable) pipelines. Prior to backfill, install tracer wire on top of pipe and secure in place with ties at maximum 10-foot intervals. The tracer wire system shall be installed as a continuous single wire. No looping or coiling of wire is allowed. The wire shall be installed in such a manner as to be able to properly trace all pipelines without loss or deterioration of signal or without the transmitted signal migrating off the tracer wire. Splices along the continuous run of tracer wire for repair of a wire break or replacement of failed segment of wire shall use 3M Brand DBR Direct Bury Splice Kit or approved equal. Except for approved spliced-in repair or replacement connections, tracer wire shall be continuous and without splices from each tracer wire access point.

√√ No irrigation trenching shall pass closer than 10 feet of the base of any existing tree. No tree root larger than 2" diameter shall be cut without approval. See TREE PROTECTION SPECIFICATIONS.

COVER OVER MAINLINES:
√√ Maintain 24 inches of cover over mainlines 2" and smaller in diameter. Mainlines 3" and larger in diameter shall have 30" of cover over the top of the pipe, (801-5.3). All trenching shall be per details.

COVER OVER LATERAL LINES:
√√ Maintain 12 inches of cover over all lateral lines.

COVER OVER CONTROL WIRE CONDUIT:
√√ Maintain 18 inches of cover over all control wire conduit.

PIPE BEDDING AND BACKFILL: All trench backfill shall be performed in accordance with approved soils report. Pipe bedding shall be clean site soil, free of all rocks, debris, etc. over 1/2" diameter. Bedding shall surround the pipe to one foot min. above the top of the pipe and shall be placed in 8-inch lifts. Backfill shall be the material placed above the bedding to finish grade. There shall be no rocks over 2" in greatest dimension or organic matter in the backfill. Backfill shall be placed in 8-inch lifts. All bedding and backfill shall be properly moisture conditioned and compacted at each lift. All trenches shall have a minimum relative compaction of 90%. Compaction shall be tested by the City at locations to be determined by the Geotechnical Engineer. Trench backfill which exhibits insufficient compaction shall be subject to excavation and re-compaction until minimum compaction is achieved. Finished trenches shall be flush with adjacent finish grades. The Contractor shall be responsible for maintaining the trenches flush and smooth with adjacent surface grade until final acceptance of the project. After compaction has been approved, trenches in existing turf areas shall be re-planted per "Method A" lawn repair of the Landscape Planting Section of the Landscape Construction Notes, unless otherwise noted.

PIPES AND REMOTE CONTROL WIRING CROSSING UNDER PAVING:
Where irrigation piping crosses a vehicular roadway or other paving having a width of less than 25 feet, a Schedule 40 PVC sleeve which is a minimum of two pipe sizes larger than the piping to pass through it, shall be placed under the paving at a depth of 36 inches minimum. Where remote control wiring crosses under paving having a width of less than 25 feet, a 3 inch Schedule 40 PVC sleeve shall be placed under the paving at a depth of 30 inches minimum. All sleeves shall extend 3 feet minimum beyond the edges of paving.

Where irrigation piping crosses a vehicular roadway or other paving having a width greater than 25 feet, a trench shall be excavated across the roadway or paving to accommodate a Schedule 40 PVC sleeve a minimum of two pipe sizes larger than the piping to pass through it, at a depth of 30 inches below the bottom of the paving, as measured from the top of the sleeve. Where remote control wiring crosses under paving having a width greater than 25 feet, a 3 inch Schedule 40 PVC sleeve shall be installed at a depth of 30 inches below the bottom of the paving, as measured from the top of the sleeve. The backfill of the trench shall be a 2 sack cement slurry. The slurry shall extend from the bottom of the trench to within one inch of the bottom of the existing paving. The trench in the existing paving shall be repaired with a like paving material and join the existing paving both horizontally and vertically.

STEEL PIPELINE
Joints shall be made with Teflon tape applied to the male threads only, (801-5.3.2).

PLASTIC PIPELINE-SOLVENT WELDED
Prior to the application of the P.V.C. solvent cement, prepare all surfaces to be solvent welded with tetrahydrofuran primer tinted purple.

PLASTIC PIPELINE- THREADED ENDS
Teflon tape shall be used on all plastic male pipe threads, (801-5.3.3).

SPIGOT AND BELL JOINTS FOR 3" AND LARGER PVC MAINLINE
Field cut pipe shall be beveled at approximately 15º and all sharp corners smoothed. Align pipe sections straight. Clean all debris from the bell areas of the fitting and install gasket so that it is completely seated in the groove with no raised areas.

Apply lubricant to the installed gasket and to beveled end of the cut pipe or to the spigot end of the pipe or fitting. Align the pipe with fitting and push together by hand or with pry bars on the end of the fitting or with two pry bars using the lugs on the fitting. Insert until the reference line mark is even with edge of the fitting bell.

FITTINGS ON MAINLINES:
All outlets from a mainline shall be per details in irrigation plans. No exceptions are allowed without prior approval of landscape architect.

LAYOUT OF PIPING
Pipe layout as shown on irrigation plan is schematic. Contractor shall route piping in planted areas in the most expedient manner consistent with the requirements set forth herein, including avoidance of tree roots. Contractor shall adhere to As-Built requirements as shown below.

INSTALLATION OF VALVE BOXES
Boxes shall be set flush with existing grade, including sloped areas, and all soil within 12 inches of the perimeter of the box shall be compacted by water settlement as indicated in the trench repair section of this specification. Boxes are to be positioned per details.

√√ **PLACEMENT OF IRRIGATION HEADS**
Note: Irrigation plans are designed, as a minimum standard, for head-to-head coverage. Head locations shall be determined by referencing the irrigation plan and using the head spacing listed in the irrigation head legend. Accuracy of final installation shall be within plus or minus 12 inches for all rotary heads having a throw of 30 feet or greater; within plus or minus 4 inches for all head types with a throw of under 30 feet. Where heads are located adjacent to paving, the heads shall be placed within three inches of such paving unless otherwise noted.

Prior to head installation, Contractor shall mark the proposed locations of all irrigation heads in the field for review and approval by the Engineer. Contractor shall make any adjustments to head locations requested by the Engineer at that time at no additional expense to the City. Contractor shall provide minimum 48 hours notice prior to the requested time of inspection.

INSTALLATION OF IRRIGATION HEADS
Heads in lawn areas shall be set flush with finish grade at initial installation and protected during construction. All soil 12 inches from the perimeter of the head shall be compacted as indicated in applicable details.

SPRINKLER HEAD RISER
All plastic sprinkler heads shall be installed on swing joint assemblies as shown on details.

AUTOMATIC CONTROL SYSTEM INSTALLATION
The automatic controller shall be of the type indicated on the plans (including station capacity and specific modules and accessories from the same manufacturer) and installed inside an approved enclosure per details.

√√ **LOW VOLTAGE WIRE CONNECTIONS**
Connectors shall be DBY or DBR as manufactured by 3M Corp. Control wires shall be stripped of 1/2 inch insulation, inserted into the electrical spring connector, and the connector twisted in a clockwise direction until the wires are tight. Insert the completed splice into the gel-filled tube, and check visually to confirm that the wire nut has been pushed past the fingers and is seated in the bottom of the tube. Position wires in wire channels and close insulator cover.

√√ **IRRIGATION SYSTEM FLUSHING AND TESTING**
The irrigation MAINLINE shall be flushed in the presence of the BCA Inspector. Flushing shall start with the valve closest to the point of connection and proceed with each consecutive valve toward the valve farthest from the point of connection. After the entire irrigation MAINLINE system has been flushed the system shall be pressure tested in accordance with section 801-5.7 of the SSPWC.

√√ The irrigation system mainlines shall be pressure tested for 24 hours at 125 p.s.i. with all control valves in place and closed. During the test, the Contractor shall provide pressure gauges downstream from the backflow device and upstream from the farthest remote control valve in the system. Air pressure testing of the irrigation system is acceptable if approved by the BCA inspector. Placement of controller wires shall be verified before mainline trenches are backfilled after pressure test.

√√ After installation, the irrigation lateral lines shall be thoroughly flushed in the presence of the BCA inspector. Each valve and lateral system shall be flushed commencing with the head closest to the valve and proceeding to the farthest head.

√ **RECORD DRAWINGS (AS-BUILTS) AND CONTROLLER CHARTS**
As built plans shall be maintained throughout the construction period and turned over to the Project Manager at the Operational Final Inspection, in accordance with Article 8 of the General Requirements.

Irrigation record drawings shall include the following:

Dimension the following locations from two permanent points of reference (building corners, sidewalks, road intersections, etc.):
a. Connection to existing water lines
b. Connection to existing electrical power
c. Gate valves
d. Mainline routing and/or directional turns (dimension maximum 100 feet along routing).
e. Remote control valves
f. Air and pressure relief valves
g. Master valves/flow sensors
h. Control wire routing
i. Quick coupling valves
j. Lightning protection (rod, plate, etc.)
k. Pull boxes
l. Irrigation controllers
m. Backflow prevention units

BUREAU OF ENGINEERING
OFFICIAL RECORD

The Contractor shall provide two copies of a controller chart showing the irrigation system as installed. The chart shall be done on a half size photographic reproduction of the irrigation plan and shall reflect the as-built data. Each station shall be shown in a different color and control wire locations shall be indicated. A separate chart listing each station number, planting type, head type, running time shall be affixed to inside door of enclosure. Both be laminated on each side with a 20 mil acrylic plastic sheet. A 3/4" brass grommet shall be placed in each top corner. The Contractor shall obtain approval of the controller chart from the Project Manager, before proceeding with the plastic lamination.

WARRANTY FOR IRRIGATION SYSTEM WORK
The entire sprinkler irrigation system shall be warranted to be free from defects in materials and workmanship, and installed in accordance with these Landscape Construction Notes and the SSPWC. The Contractor shall be required to repair or replace any defects in material or workmanship which may develop within one (1) calendar year from the date of acceptance, ordinary wear and tear and unusual abuse or neglect excepted. Further, the Contractor shall be required to make any necessary repairs within 48 hours of notification at no cost to the city. If the Contractor or his agent fail to make such repairs within the stipulated time, the city shall make such repairs or have repairs made by a third party and bill the Contractor for all expenses that accrue from making such repairs.

GUARANTEE AGAINST SETTLEMENT
If, within one (1) calendar year from the date of acceptance, settlement occurs along mainlines, lateral lines, at valve boxes, or other irrigation related appurtenances, and adjustments in pipes valves and sprinkler heads are required to bring the system, sod, or paving to the level of the permanent grades, the Contractor shall make all adjustments without additional cost to the Department, including complete restoration of any planting, paving, or other improvements damaged as a result of settlement.

INSPECTIONS
All work and materials are subject to inspection and approval by the Project Manager. Any work done without proper inspection will be subject to rejection per Section 2-11 of the Standard Specifications for Public Works Construction.

The Contractor shall notify the Bureau of Contract Administration (BCA) Inspector and Project Manager three (3) days prior to inspection of the following for approval:

√√**1.** **IRRIGATION MAINLINE PRESSURE TEST:** The pressure test shall take place under the direction of the BCA Inspector, per the Irrigation section in the Landscape Construction Notes.

√√**2.** **IRRIGATION COVERAGE TEST:** After installation of heads and lateral lines etc., entire irrigation system shall be tested for coverage per the Irrigation section of the Landscape Construction Notes. The BCA Inspector, Project Manager, Contractor and Recreation and Parks Regional maintenance staff shall be notified three (3) days before the scheduled test.

THE CITY OF LOS ANGELES OR ITS OFFICERS OR AGENTS SHALL NOT BE RESPONSIBLE FOR THE ACCURACY OR COMPLETENESS OF ELECTRONIC COPIES OF THIS PLAN SHEET.

TEMPLATE SHEET REVISION DATE: 08/2014
REVISION DATE: 5/15/2019 10:50 AM
FILE: O:\IN-HOUSE-DESIGN\STUDIO CITY GYMNASIUM (RL)\18_DESIGN\LANDSCAPE\WORKING COS\XREF\TITLEBLOCK_TTLB.DWG

REVISION DATES (DESIGN STAGE ONLY)

BUREAU OF ENGINEERING
CITY OF LOS ANGELES

NO.	REVISIONS:	DATE:	BY:

BUILDING NO.
INDEX NO. - **RP-300106**

LICENSED LANDSCAPE ARCHITECT No. 3060 Renewal Date 08/31/20 STATE OF CALIFORNIA

CITY OF LOS ANGELES DEPARTMENT OF PUBLIC WORKS

CITY ENGINEER

	DATE:
TED ALLEN, PE	
ARCHITECTURAL DIVISION	
ARCHITECT: RICHARD W. FISHER LIC. NO. 3060	04/30/19
DESIGNED BY: RICHARD W. FISHER	04/30/19
DRAWN BY: GREG MOESER	04/30/19
CHECKED BY: JANE ADRIAN	04/30/19
APPROVED BY: MAHMOOD KARMZADEH, A.I.A. DEPUTY CITY ENGINEER	04/30/19

CLIENT: DEPARTMENT OF RECREATION AND PARKS
GENERAL MANAGER: MICHAEL A. SHULL

SHEET TITLE: LANDSCAPE CONSTRUCTION NOTES, SHEET 2

PROJECT: STUDIO CITY GYMNASIUM

ADDRESS: 12621 RYE STREET STUDIO CITY, CA 91604

WORK ORDER NO. E170267B
PLAN FILE NO.
DRAWING NO. L002
SHEET 192 OF SHEETS 211

PLOTTED: 5/15/2019 10:52 AM

6. LANDSCAPE PLANTING

MATERIALS

GYPSUM
Shall be agricultural grade.

√ **ORGANIC AMENDMENT**
"Type 1" organic soil amendment shall be a relatively dry and friable fine-textured organic composite that is well-composted and nitrogen stabilized, derived primarily from composted greenwaste or processed wood products, and free of foreign matter including any viable plant, tree or weed seed. 99% of material shall pass through a 1/2" screen. Salinity: material shall have a maximum saturation extract conductivity of 2.50 millisiemens per centimeter.

Contractor shall submit a sample of the organic soil amendment to the Project Manager/BCA Inspector for approval prior to installation.

GRO-POWER PLUS – GENERAL PURPOSE FERTILIZER
Shall have a minimum analysis of 5-3-1 (N-P-K) derived from ammonium phosphate, urea, sulfate of potash, compost and sulfides and oxides of iron, manganese and zinc, with 1.00% Alkyl Naphthalene Sodium Sulfonate soil penetrant as manufactured by Gro-Power Inc., 5065 Telephone Avenue, Chino, CA 91710 (909) 393-3744, or an approved equal.

FERTILIZER TABLETS
Fertilizer tablets shall be Gro-Power planting tablets, 7 gram 12-8-8 (N-P-K) 20% HUMUS, 4% HUMIC ACIDS, 3.5% Sulfur, 2% Iron, Micronutrients, as manufactured by Gro-Power Inc., 5065 Telephone Avenue, Chino, CA 91710 (909) 393-3744, or an approved equal.

GLYPHOSATE
Shall be a water-soluble herbicide for non-selective systemic control of weeds containing 480 grams per liter of the active ingredient Isopropylamine salt of N-(phosphonomethyl) Glycine (Glyphosate) per U.S. gallon, or approved equal.

PRE-EMERGENT HERBICIDE
Shall be Ronstar Granular, by Elanco, or an approved equal. All pre-emergent herbicides, when required, shall be specified and applied by a licensed Pest Control Advisor.

√ **TOP DRESSING MULCH**
Shall be seasoned tree chip mulch, free all foreign matter including weed and tree seeds. Mulch chip size shall be minimum one (1) inch in diameter and not more than two (2) inches in diameter. Submit sample of mulch and source to the Project Manager or BCA Inspector for approval prior to application.

PLANT MATERIALS:

a. **ALL PLANTS**: The plant names shown or listed on the Contract Drawings shall conform to the "Sunset Western Garden Book," latest edition unless otherwise specified. In all cases, botanical names take precedence over common names.

b. **QUALITY**: All plants shall have a growth habit normal to the species in accordance with U.S.A. Standards for Nursery Stocks, latest editions; shall be sound, healthy, vigorous and free from insect pests, plant disease, sun scalds, weeds, fresh bark abrasions, excessive abrasions or other objectionable disfigurements. Tree trunks shall have normal well-developed branch systems. All plant materials shall have vigorous and fibrous root system, not root bound and shall be free of kinked or girdling roots.

c. **TYPE AND SIZE**: Plant materials shall be as listed on the Contract Drawings, unless otherwise instructed by the Project Manager. In case of conflict between the plant schedule totals and total plant count of the contract documents, the Contractor shall the higher number of plants.

d. **DELIVERY OF PLANT MATERIAL**: shall begin only when it is ready for the work and after the inspections are made and any required soil samples and tests have been reviewed by the Project Manager. All materials furnished for the work shall be not less than the reviewed sample. Upon delivery, Contractor shall tag one plant of each variety for identifying purposes.

e. **PRUNING**: Other than normal side pruning during the growth period, no pruning shall be done prior to the inspection at the nursery.

f. **TREES**: All trees shall conform to types, sizes and heights noted on the Contract Drawings. All trees shall be measured for height from the root crown to the last division of the terminal leader and measured for the diameter 3 feet above the root crown. All palm trees shall be measured for height from the root crown to the brown trunk and measured for the diameter 3 feet above the root crown. Trees and plams shall stand erect without support.

All trees shall be staked as designated on the Contract Drawings. Wood tree stakes shall be 2 inches in diameter by 10 feet long, lodgepole grade, pressure treated, capable of standing in the ground at least two years.

g. **SOD**: Shall be of the type designated on the planting plan, or an approved equal. Sod shall be delivered to the jobsite within 24 hours of being cut at the nursery, and COMPLETELY installed within 12 hours of delivery to the jobsite. The sod shall be machine cut to between ¼" and 5/8" thick, not including top growth or thatch.

METHODS

TOPSOIL PREPARATION - GENERAL
The type and thickness of topsoil shall be as shown on the plans. If not shown, the topsoil shall be the existing class "C" on-site topsoil. Topsoil shall be scarified and cultivated to a uniform, finely divided condition to a depth of 9 inches. Remove all stones over 1 inch in greatest dimension, to a depth of 6 inches below finish grade, (801-2.2.1). ***All soil amendments shall be thoroughly and uniformly incorporated***. Prior to planting, the top 2 inches of all areas (including slopes) shall be free of weeds, stones and other deleterious matter 1 inch in diameter and larger. Soil shall not be worked when it is so wet or dry as to cause excessive compaction or the formation of large clods or dust.

TOPSOIL PREPARATION
If not otherwise specified, all lawn and ground cover areas shall receive the following soil preparation:
- 3 cubic yards, Type I organic soil amendment per 1,000 sq. ft.
- 20 lbs. Agricultural Gypsum per 1000 sq. ft.
- 50 lbs. Gro-Power Plus fertilizer per 1000 sq. ft.

The soil preparation materials shall be uniformly cultivated into the soil to a depth of 12 inches minimum and thoroughly watered (801-2.2.1).

√√ **FINISH GRADING (FOR LAWN AREAS)**
Finish grading of lawn areas shall take place after the soil has dried out to a workable condition following the soil preparation operations. The soil shall be remodeled and smoothed to the required grades and contours, then rolled in two directions at right angles with a water ballast roller weighing 200 to 300 pounds. Any resulting irregularities in the grade after the initial rolling shall be re-raked, cut or filled, then re-rolled until the grade is free from irregularities. No heavy objects shall be taken over the areas at any time. The final finish grade shall be uniform, without abrupt changes in grade, within one-tenth of a foot of the grades shown on the plan, and approved by the Project Manager/ BCA Inspector prior to seeding or sodding. (801-2.3).

WEED ABATEMENT: "GROW AND KILL METHOD"
Weed abatement shall apply to all areas to be planted or mulched. Contractor shall follow the "grow and kill" steps set forth below:

Demolition: Clear site of all dead or living vegetative growth by hand or mechanical means. Contractor shall keep site free of all weeds and undesirable vegetation until commencement of Step 2.

Step 1: "Grow Period". Thoroughly water all turf and planting areas daily to keep soil evenly moist to achieve optimum germination for a period of at least two weeks. Hand water if needed. The "Grow Period" shall be commenced only after demolition, grading, hardscape construction, installation of irrigation system, soil preparation, and fine grading of turf and planting areas have been completed.

Step 2: "Kill Period". At the conclusion of the growth period, treat all weeds within the required area with glyphosate herbicide at an application rate of five (5) quarts mixed in 50 gallons of clean water per acre applied by spraying. Follow the manufacturer's instructions for determining acceptable times/weather conditions for application, and thoroughly moisten all plant material with herbicide. ***Do not water or otherwise disturb treated areas for a period of two (2) weeks.***

Step 3: "Removal". After two week kill period, remove all dead plant growth. If any living plants are observed, entire plant, *including all viable roots*, shall be removed by hand. Minimize physical disturbance of the soil.

NOTE: It is required that herbicides be applied by a licensed **PEST CONTROL APPLICATOR.**

CONTRACTOR RESPONSIBILITY DURING WEED ABATEMENT OPERATION AND APPLICATION PRECAUTIONS
The Contractor shall abide by all laws and codes governing weed abatement operations including but not limited to CAL-OSHA requirements and The Healthy School Act which includes 72 hour notice to employees and patrons, submittal of a "Pest Control Recommendation Form" to RAP, and a completed and accurate SDS (Safety Data Sheet) to be at the site of application. The area of application shall be posted as such and barricaded for public safety and information. On sites over ½ acre in size the contractor shall utilize a Project Manager approved plan of phasing the application.

The Contractor is responsible or any and all damage done to plant materials outside of the treatment area. Contractor shall replace, in kind and size, any plant material damaged or killed through the application of herbicide.

Any Contractor, who is obligated under contract with the City for the construction or refurbishment of a park facility that involves the intended use of herbicides or other pesticides, must first notify the pest management supervisor of the Forestry Division (213) 485-3674. Prior to any approved pesticide applications at any recreation/child care center, the contractor is also required to notify the recreation director-in-charge at least 72 hours in advance of the date/s of application. This is to conform to the State of California Healthy Schools Act of 2000(AB2260). Also, all pest control work performed at any facility should fall within the guidelines of the City's IPM programs. In addition, each individual project will require a written recommendation by a licensed Pest Control Advisor for any pesticide application.

Any questions regarding pesticide application and procedures at Recreation and Parks facilities shall be directed to the Project Manager/BCA Inspector and the RAP Forestry group, Vegetative Management (213) 485-4826.

In addition to the listed responsibilities the following precautions shall be observed in handling and applying herbicide:
1. Before applying, Contractor shall read and understand all instructions provided by the manufacturer.
2. Product shall not be used when winds are gusty or in excess of 3 miles per hour, or when any other conditions exist, which would result in drift.
3. Avoid combinations of pressure and nozzle type or adjustment that result in mist.
4. Do not apply during rain, or if rain is forecast within twelve hours. If rain occurs within twelve hour period, material must be reapplied after plant growth has dried out.
5. Contractor shall observe extreme care not to allow spray to contact desirable plant material. Use cardboard, plywood, or other appropriate material to shield plant materials outside of the treatment area from overspray.
6. Do not apply to bare ground.
7. Do not add any other products to any herbicide mix, including spreader stickers or surfactants, unless required by the label directions and approved by the City's Pest Control Advisor (PCA).

WEED SUPPRESSION (NON-HERBICIDE WEED REMOVAL)
Weed suppression, shall apply to all turf and planting areas. The suppression operation shall be commenced only after removals, grading, hardscape construction, installation of irrigation system, soil preparation, and fine grading of turf and planting areas have been completed. Contractor shall thoroughly water all turf and planting areas for a period of two weeks minimum prior to commencing removal. Contractor shall clear site of all dead vegetation and living weeds by hand or mechanical means. All removed vegetation shall be properly disposed of off-site.

√√ **PLANT MATERIAL INSPECTION**
All plant materials, including plants previously approved at the nursery, shall be inspected by the Project Manager or BCA Inspector prior to planting. The Contractor shall be responsible for the condition of all plants, planted or otherwise, until final acceptance by the City and termination of maintenance period. Contractor shall be obligated to honor all requirements of warranty as indicated herein. Contractor shall perform planting with materials and equipment according to procedures favorable to the optimum growth of the plant. Do not plant during windy conditions. Except as noted for specimen planting, do not start planting operations until the completion of weed suppression and completion and acceptance of the irrigation system.

PLANT PROTECTION AND STORAGE
Keep all plant materials delivered to the job site in a healthy condition for planting. Do not allow plants to dry out or suffer physical damage from other construction activities.

√√ **PLANTING LAYOUT**
Plant locations indicated on the Contract Drawings are approximate. Contractor shall lay out each plant in its intended plating location shown on the plan while the plant is still in the pot and obtain approval of the Project Manager or BCA Inspector **prior to** actual planting operations. Plants may be re-spotted prior to planting as directed by the Project Manager or BCA Inspector without additional compensation to the Contractor.

Locate the first row of plants in areas designated for on center spacing at one-half the designated spacing from the edge of the area. Do not stretch the maximum specified spacing for each species shown on the plans.

Plant pits for all 1 gallon, 5 gallon, 15 gallon, and all boxed size trees, shall be twice the width and equal to the depth of the container rootball. Note that this requirement differs from the SSPWC (801-4.5).

PLANTING BACKFILL MIX
Unless specified otherwise or required by an agricultural suitability and fertility analysis, container plants shall be backfilled with thoroughly amended site soil.

Each plant pit shall also receive Gro-Power 7 gram 12-8-8 planting tablets as shown in the relevant planting details, and as follows:
1 gallon – 2 tablets
5 gallon – 5 tablets
15 gallon – 10 tablets
24" box – 15 tablets
Specimen trees: 5 tablets per half inch of caliper at base, not less than 15.

Space tablets evenly around the perimeter of the rootball, approximately 3 inches below finish surface. **Unless otherwise specified, planting tablets shall not be used with California native species – SEE PLANTING LEGEND.**

PLANTING
Make planting holes approximately square with vertical sides **no greater than** the depth of the plant container (or such depth as needed so that the root crown has the correct relationship to adjacent finished grade per the planting details) and approximately twice the width of the plant container or rootball and larger if necessary to permit handling and planting without injury to the root system. Install root barriers if/where indicated on the Contract Drawings in accordance with the details and/or the manufacturer's recommendations. Lightly scarify native soil at the bottom of planting holes.

Specimen Planting: When in close proximity to irrigation lines, plants in boxes (24 inches or larger) may be planted before installation of lateral irrigation lines. Re-rout irrigation lines in conflict with specimen plant locations to clear the rootball.

Do not plant plants with a broken or cracked rootball. Such plants shall be considered defective and rejected.

Open and remove plant containers in such a manner that the plant roots are not injured. Do not pull plants out of the pot by the stalk.

After "water settling" the bottom half of the planting hole, set the plant approximately in the center of the planting hole and adjust the root crown to the correct relationship to finish grade per the planting details. After the plant has been placed, additional backfill shall be added to the hole to cover approximately one-half the height of the rootball. At this stage, water shall be added to the top of the partly filled hole to thoroughly saturate the rootball and adjacent soil. The remainder of the hole shall be backfilled and watering repeated.

Prune or remove any broken or damaged minor limbs. Any major damage to plant material shall be brought to the attention of the Project Manager or BCA Inspector.

Immediately after planting, form a circular watering basin slightly larger than the planting hole: 6 inches high for trees and 3 inches high for shrubs. The bottom the basin shall be at the level of the surrounding finish grade.

Restore the area around the plants and watering basins to designated finish grade and dispose of excess soil.

After planting, plants shall be plumb, with the root crown at the correct relationship to finish grade per the planting details. All plants which settle more than 1 inch shall be raised by the Contractor to the correct level, as shown in the planting details, at no additional cost to the City.

Remove all watering basins around trees planted in lawn areas at the end of the maintenance period. All trees planted in lawn areas shall have a 36 inch diameter unplanted area around each tree.

METHOD "A" LAWN PLANTING – REPAIR, SEEDING
Irrigation trenches shall be fully compacted and the grade brought flush with the adjacent undisturbed finish grade. Irrigation trench areas and areas where equipment has damaged the existing lawn shall be seeded per this section.

Sow seed at a rate of three (3) pounds of Stovers 'Princess" bermuda grass per 1,000 sq. ft. and six (6) pounds of perennial ryegrass per 1,000 sq. ft. Mulch all seed with 1/4" (or 3/4 cubic yard per 1,000 sq. ft.) Organic Top Dressing.

Alternate method: Existing sod may be carefully cut, removed and reused to sod trenches after backfilling and densification.

METHOD "B" LAWN PLANTING, HYDROSEEDING
The lawn seed mix for lawn planting shall contain the following materials at the rates specified:
A. Mulch Fiber - 1,500 lbs./acre
B. Stabilizer - 120 lbs./acre
C. Fertilizer - Hydrobleng, at 3,000 lbs. per acre (or approved equal)

If seeding of turf areas is done during cool-season (between October 1st and March 1st) mix shall be:

D. Seed by Weight
280 lb./acre Stovers 'Grand Slam' ryegrass
60 lb./acre Stovers "Princess" bermuda grass
60 lb./acre Stovers 'AZ-1' improved kikuyugrass

If seeding of turf areas is done during warm-season (between March 1st and October 1st) mix shall be:
D. Seed by Weight
100 lb./acre Stovers 'Grand Slam' ryegrass
75 lb./acre Stovers 'Princess" bermuda grass
75 lb./acre Stovers 'AZ-1' improved kikuyugrass

The Contractor shall supply a delivery receipt to the BCA Inspector certifying conformance with the specified hydroseed mix and indicating that the slurry has not been mixed for longer than two hours. Slurry which has been mixed longer than two hours shall be recharged with 50 percent more of the specified seed mix, at the Contractor's expense, (801-4.8.2(b)). Delivery tickets shall be forwarded to the Project Manager/ BCA Inspector.

See Hydroseeding section for additional information.

SOD LAWN
Sod shall be laid on a grade which has been amended and finish graded in accordance with the topsoil preparation and finish lawn grading specifications of the Landscape Construction Notes. The sod strips shall be laid tight against the adjacent strip with adjacent ends forming a running bond pattern. After laying the sod, roll with a minimum 300 lb. water ballast roller and irrigate.

The sod shall be Tifway Bermuda overseeded w/Perennial Ryegrass available from Pacific Sod (800) 942-5296 or approved equal.

MULCHING
All planting areas except lawn shall receive a minimum three (3) inch deep layer of Top Dressing Mulch per the Planting Details and the Landscape Construction Notes Materials list. Mulch shall be spread evenly throughout planting beds and tree watering basins. Do not bury plant crowns. Prior to placing mulch, apply pre-emergent herbicide per manufacturer's instructions.

√√ **PLANT ESTABLISHMENT PERIOD**
The plant establishment period shall be for a period of 90 days unless extended as described in this section. The plant establishment period shall be started when all planting and related work has been completed in accordance with the contract documents and approved by the Project Manager. The beginning of the plant establishment period shall be determined by an on-site review by the Project Manager. The Contractor shall immediately replace any and all plant materials and/or grass which, for any reason dies or is damaged while under the Contractors care. Replacement shall be made with sod and/or plants as indicated or specified for the original planting.

The Contractor shall be responsible for maintenance within the area of work ***throughout the period of construction and the plant establishment period***. Broken or vandalized trees, shrubs, or tree stakes shall be repaired/replaced to a condition as initially installed within seven (7) days of damage. The maintenance shall include continuous operations of picking up trash and emptying trash cans daily, watering, the removal of all weeds in planting areas and all broad leaf weeds in lawn areas, mowing, rolling, trimming, edging, cultivation, fertilization, spraying, control of pests, insects and rodents, reseeding, plant replacement (irrespective of cause), or any other operations necessary to assure normal plant growth and the collection and removal of all trash daily. The Contractor shall maintain the area of work at maximum seven (7) day intervals and perform any needed mowing of existing lawns within the area of work when the grass reaches a three (3) inch height maximum. Five weeks after lawn seeding the Contractor shall apply a slow release 38-0-0 granular fertilizer at a rate of 15 pounds per 1000 sq. ft. to all lawn areas. The fertilizer shall be applied in the presence of the BCA Inspector.

All lawns shall be of the grass seed or sod specified and shall be free from all broad leaf weeds. The lawn shall not be allowed to grow higher than three (3) inches and shall be mowed to a one and one half (1-½) inch height. The lawn shall be mowed at least weekly during the plant establishment period. All lawn areas shall have 95 percent coverage with bare areas not exceeding three square inches at the end of the plant establishment period. Trees and shrubs shall be healthy and vigorous at the completion of the plant establishment period.

Any malfunctions of, or damage to, the irrigation system caused by the Contractor in the prosecution of his work shall be repaired within 24 hours.

The designated plant establishment period is part of the total contract time. The plant establishment period will be extended at fourteen (14) day intervals if, at the end of the plant establishment period, the planting, irrigation and other improvements do not reflect the intent of the plans and Landscape Construction Notes. All extensions of the plant establishment period shall be subject to the assessment of liquidated damages, (801-6).

All shrubs and ground covers shall be guaranteed for a period of ninety (90) days from the end of the plant establishment period. All trees and shrubs 15 gallon size or larger shall be guaranteed for a period of one (1) year from the end of the plant establishment period.

INSPECTIONS
All work and materials are subject to inspection and approval by the Project Manager. Any work done without proper inspection will be subject to rejection per Section 2-11 of the Standard Specifications for Public Works Construction.

The Contractor shall notify the Bureau of Contract Administration (BCA) Inspector and Project Manager three (3) days prior to inspection of the following for approval:

√√**1.** **TREE TAGGING:** Tagging of 24" box or larger trees at the grower with Bureau of Engineering tags. This inspection will be for compliance with the caliper, height and spread requirements if given on the plant legend and general health, structure and appearance of plants. See Planting section of Landscape Construction Notes.

√√**2.** **ON-SITE PLANT MATERIAL INSPECTION:** Inspection of all plant materials under 24" box size upon delivery to the job site. This inspection will be for compliance with the caliper, height and spread requirements if given on the plant legend and for the general health, structure and appearance of plants. The Contractor shall also stake all tree planting locations at this time for review and approval by the Project Manager. See Planting section of Landscape Construction Notes.

√√**3.** **FINISH GRADE REVIEW:** For all finish grades in planting areas following rolling in turf areas and prior to landscape container planting.

END OF LANDSCAPE CONSTRUCTION NOTES

BUREAU OF ENGINEERING OFFICIAL RECORD

THE CITY OF LOS ANGELES OR ITS OFFICERS OR AGENTS SHALL NOT BE RESPONSIBLE FOR THE ACCURACY OR COMPLETENESS OF ELECTRONIC COPIES OF THIS PLAN SHEET.

REVISION DATES (DESIGN STAGE ONLY)

TEMPLATE SHEET REVISION DATE: 08/2014
REVISION DATE: 5/15/2019 10:50 AM
FILE: O:\IN-HOUSE-DESIGN\STUDIO CITY GYMNASIUM (RL)\18_DESIGN\LANDSCAPE\WORKING COS\XREF\TITLEBLOCK_TTLB.DWG

BUREAU OF ENGINEERING
CITY OF LOS ANGELES

BUREAU OF ENGINEERING
CITY OF LOS ANGELES

INDEX NO. - RP-300106
BUILDING NO.

NO.	REVISIONS:	DATE:	BY:
1			
2			
3			
4			

LICENSED LANDSCAPE ARCHITECT No. 3060 RICHARD W. FISHER Signature Renewal Date 08/31/20 Date STATE OF CALIFORNIA

DEPARTMENT OF PUBLIC WORKS
CITY OF LOS ANGELES

CITY ENGINEER
TED ALLEN, PE

	DATE:
ARCHITECTURAL DIVISION	
ARCHITECT: RICHARD W. FISHER LIC. NO. 3060	04/30/19
DESIGNED BY: RICHARD W. FISHER	04/30/19
DRAWN BY: GREG MOESER	04/30/19
CHECKED BY: JANE ADRIAN	04/30/19
APPROVED BY: MAHMOOD KARIMZADEH, A.I.A., DEPUTY CITY ENGINEER	04/30/19

CLIENT: DEPARTMENT OF RECREATION AND PARKS
GENERAL MANAGER: MICHAEL A. SHULL

SHEET TITLE LANDSCAPE CONSTRUCTION NOTES, SHEET 3

PROJECT: STUDIO CITY GYMNASIUM

ADDRESS: 12621 RYE STREET STUDIO CITY, CA 91604

WORK ORDER NO. E170267B
PLAN FILE NO.
DRAWING NO. L003
SHEET 193 OF SHEETS 211

PLOTTED: 5/15/2019 10:52 AM

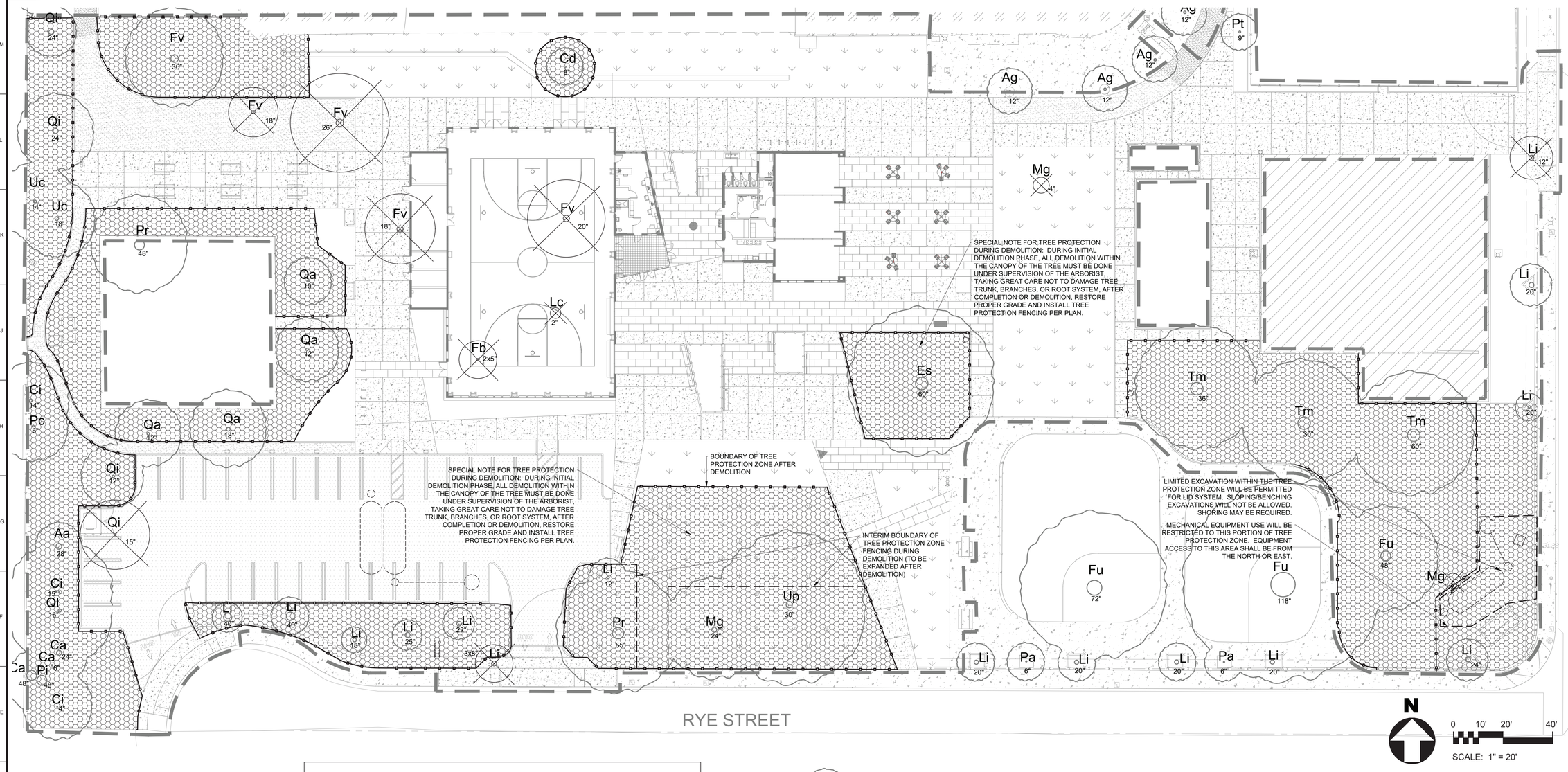

FENCING MATERIALS

1. POSTS: O.D., LINE POSTS 2-3/8 IN. O.D. POST SPACING TO BE 10'-0" MAX. POSTS TO BE DRIVEN 2' BELOW RELATIVE GRADE.
2. FABRIC: 9 GAUGE, 2 IN. MESH, KNUCKLE TOP AND BOTTOM, PLACE ON OUTER SIDE OF POST.
3. TIE WIRES: 11 GAUGE AT 12" O.C.
4. POST TOPS MALLEABLE IRON OR PRESSED STEEL.
5. 24"x18" SIGN, ATTACH WITH TIE WIRES. SIGN TO BE PROVIDED BY RAP.
6. HINGES: INDUSTRIAL BULLDOG HINGE (180 SWING) 2 HINGES PER GATE, ONE TOP AND ONE BOTTOM.
7. GATE FRAME: SIDES, 2-3/8" DIA
8. LOCKABLE CAST ALUMINUM FORK LATCH POST TOPS MALLEABLE IRON OR PRESSED STEEL.

GATE

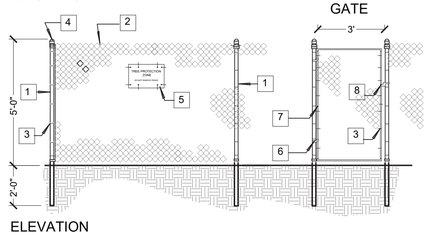

ELEVATION

NOTES:
1. CHAIN LINK FENCE MATERIALS SHALL CONFORM TO THE CHAIN LINK FENCE AND MISCELLANEOUS METAL CONSTRUCTION SECTION OF THE NOTICE TO CONTRACTORS.
2. THE BOTTOM OF THE FABRIC SHALL BE POSITIONED ONE INCH ABOVE FINISH GRADE.
3. PROVIDE FOR ONE 3' WIDE GATE PER ENCLOSURE.
4. ALL FENCING TO HAVE A STANDARD GALVINIZED FINISH

A4	5' HIGH TREE PROTECTION FENCE
N.T.S.	RP DETAIL 500.1

EXISTING TREES

Aa - Ailanthis altissima - Tree of heaven
Ag - Afrocarpus gracilior, East African yellowwood
Ca - Celtis australis, European hackberry
Cd - Cedrus deodara, Deodar cedar
Ci - Carya illinoinensis, Pecan
Es - Eucalyptus species, Eucalyptus
Fb - Ficus benjamina, Benjamin fig
Fu - Fraxinus uhdei, Evergreen ash
Fv - Fraxinus velutina, Velvet ash
Lc - Lophostemon Confertus, Brisbane Box
Mg - Magnolia grandiflora, Southern magnolia
Li - Lagerstroemia indica, Crape myrtle
Pa - Platanus acerifolia, London plane tree
Pc - Prunus caroliniana, Carolina laurelcherry
Pr - Platanus racemosa, California sycamore
Pi- Prunus ilicifolia ssp lyonii - Catalina cherry
Pt - Prunus x cerasifera 'Thundercloud', Purpleleaf plum
Qa - Quercus agrifolia, Coast live oak
Qi - Quercus ilex, Holly oak
Ql - Quercus lobata, Valley oak
Tm - Taxodium mucronatum, Montezuma bald cypress
Uc - Umbellularia californica, California bay
Up - Ulmus parvifolia, Chinese elm

LEGEND:

EXISTING TREE. PROTECT IN PLACE.

EXISTING TREE TO BE REMOVED AND DISPOSED OFFSITE,

LIMIT OF WORK (OFFSET FOR CLARITY)

TREE PROTECTION FENCING. SEE DETAIL, THIS SHEET.

TREE PROTECTION ZONE. REFER TO LANDSCAPE CONSTRUCTION NOTES REGARDING TREE PROTECTION. INSIDE TREE PROTECTION FENCING, PROVIDE 4" DEEP LAYER OF WOOD CHIP MULCH TO REMAIN IN PLACE UNTIL IRRIGATION AND LANDSCAPING WORK BEGIN.

TREE PROTECTION NOTES:

REFER TO THE LANDSCAPE CONSTRUCTION NOTES FOR DETAILED TREE PROTECTION INFORMATION.

DIGALERT
Call Toll Free 1-800-227-2600
TWO WORKING DAYS BEFORE YOU DIG
Underground Service Alert of Southern California

BUREAU OF ENGINEERING
OFFICIAL RECORD

THE CITY OF LOS ANGELES OR ITS OFFICERS OR AGENTS SHALL NOT BE RESPONSIBLE FOR THE ACCURACY OR COMPLETENESS OF ELECTRONIC COPIES OF THIS PLAN SHEET.

TEMPLATE SHEET REVISION DATE: 08/2014
REVISION DATE: 5/15/2019 5:44 PM
FILE: Q:\IN-HOUSE-DESIGN\STUDIO CITY GYMNASIUM (RL)\18_DESIGN\LANDSCAPE\WORKING CDS\SCRC-TREE PROTECTION PLAN L101.DWG

REVISION DATES (DESIGN STAGE ONLY)

BUREAU OF ENGINEERING
CITY OF LOS ANGELES

NO.	REVISIONS:	DATE	BY:
1			
2			
3			
4			

BUILDING NO.
INDEX NO. RP-300106

LANDSCAPE ARCHITECT ★ CALIFORNIA ★ LICENSED
No. 3060
Signature
Renewal Date
Print Name
Date

CITY OF LOS ANGELES DEPARTMENT OF PUBLIC WORKS
BUREAU OF ENGINEERING

CITY ENGINEER

	DATE:
	04/30/19
	04/30/19
	04/30/19
	04/30/19

TED ALLEN, PE
ARCHITECTURAL DIVISION
LIC. NO. 3060

ARCHITECT:	RICHARD W. FISHER
DESIGNED BY:	RICHARD W. FISHER
DRAWN BY:	GREG MOESER
CHECKED BY:	JANE ADRIAN
APPROVED BY:	MAHMOOD KARIMZADEH, A.I.A. DEPUTY CITY ENGINEER

CLIENT: DEPARTMENT OF RECREATION AND PARKS
GENERAL MANAGER: MICHAEL A. SHULL

SHEET TITLE: TREE PROTECTION (TPZ) PLAN
PROJECT: STUDIO CITY GYMNASIUM
ADDRESS: 12621 RYE STREET
STUDIO CITY, CA 91604

WORK ORDER NO. E170267B
PLAN FILE NO.
DRAWING NO. L101
SHEET 194 OF SHEETS 211

PLOTTED: 6/24/2019 3:56 PM

CONSTRUCTION NOTES:

1. PRIOR TO START OF CONSTRUCTION, CONTRACTOR SHALL COORDINATE WITH PROJECT MANAGER TO LOCATE AND DELINEATE THE CONSTRUCTION STAGING AREA. SEE GENERAL CONDITIONS AND GENERAL REQUIREMENTS.
2. CONSTRUCTION SIGN SHALL BE INSTALLED WITHIN TWO WEEKS OF THE START OF CONSTRUCTION. OBTAIN PROJECT MANAGER'S APPROVAL FOR SIGN LOCATION AND FINAL TEXT PRIOR TO FABRICATION AND INSTALLATION. SEE LANDSCAPE CONSTRUCTION NOTES AND CONSTRUCTION SIGN DETAIL.
3. LIMIT OF WORK IS AT PROPERTY LINE UNLESS OTHERWISE NOTED HEREIN.
4. ALL EXISTING R.O.W. CONCRETE SIDEWALK, STREET TREES, LIGHT FIXTURES/WIRING AND DRAINAGE FIXTURES, ETC. ARE TO BE PROTECTED IN PLACE PER LANDSCAPE CONSTRUCTION NOTES UNLESS OTHERWISE NOTED.
5. ALL EXISTING SITE FEATURES SHOWN TO REMAIN OR LOCATED OUTSIDE THE LIMIT OF WORK SHALL BE PROTECTED IN PLACE.
6. ADJACENT FENCING AND C.M.U. WALLS OUTSIDE OF PROPERTY LINE SHALL BE PROTECTED IN PLACE AND NOT DISTURBED WITHOUT PROPERTY OWNERS WRITTEN PERMISSION.
7. ANY NEW CONSTRUCTION LOCATED WITHIN THE PROTECTED ROOT AREA OF AN EXISTING TREE IS SUBJECT TO THE REQUIREMENTS LISTED IN THE SECTION "TREE PROTECTION GUIDELINES" OF THE LANDSCAPE CONSTRUCTION NOTES. PRIOR TO ANY CONSTRUCTION, CONTRACTOR SHALL HAVE ALL REQUIRED TREE PROTECTION ZONE FENCING IN PLACE. SEE SHEETS L001/L101/L102.
8. ALL MATERIAL AND WORK SHOWN ON THIS PLAN SHALL BE FURNISHED AND INSTALLED BY THE CONTRACTOR UNLESS OTHERWISE NOTED.
9. LAYOUT AND STAKING OF ALL PROJECT ELEMENTS SHALL BE DONE A LICENSED SURVEYOR PROVIDED BY THE CONTRACTOR AT HIS OWN EXPENSE. DIGITAL PLAN FILES SHALL BE PROVIDED BY CITY TO FACILITATE LAYOUT. FINAL LAYOUT AND LOCATION OF ALL PROJECT ELEMENTS SHALL BE REVIEWED AND APPROVED BY THE PROJECT MANAGER PRIOR TO INSTALLATION. CONTRACTOR SHALL REQUEST REVIEW AND APPROVAL OF LAYOUT FOR ANY PROJECT ELEMENTS 48 HOURS MINIMUM IN ADVANCE. SEE LANDSCAPE CONSTRUCTION NOTES.
10. PAVING, MASONRY AND CONCRETE INSTALLERS ARE TO COORDINATE WITH THE ELECTRICAL, DRAINAGE AND IRRIGATION INSTALLER/SUBCONTRACTORS FOR SLEEVING, PIPING AND/OR CONDUIT INSTALLATION UNDER OR THROUGH HARDSCAPE ELEMENTS PRIOR TO INSTALLATION OF HARDSCAPE ELEMENTS.

DIGALERT
Call Toll Free 1-800-227-2600
WORKING DAYS BEFORE YOU DIG
Underground Service Alert of Southern California

HARDSCAPE ALTERNATIVES - GREEN BUILDING CODE COMPLIANCE			
HARDSCAPE TYPE	AREA	SOLAR REFL.	%
NATURAL GRAY CONC.	26,574 SF	.39	56.7%
COL. CONC: SALMON	7,543 SF	.42	16.1%
ASPHALT	12,778 SF	.05	27.2%
TOTAL	46,895 SF		100%

CONSTRUCTION LEGEND:

- TURF. SEE L701.
- CONSTRUCT CONCRETE PAVING. COLOR: NATURAL GRAY. MED. BROOM FINISH. SEE CIVIL SHEETS.
- CONSTRUCT COLORED CONCRETE PAVING. COLOR: DAVIS CHARCOAL GRAY; MED. BROOM FINISH. SEE A13/L404 AND CIVIL SHEETS.
- EX. CONCRETE PAVING. PROTECT IN PLACE.
- DECOMPOSED GRANITE PAVING. SEE J13/L402.
- AC PAVING. SEE CIVIL SHEETS.
- BASKETBALL COURT/HANDBALL COURT TO REMAIN, PROTECT IN PLACE.
- MPIE EX. PULLBOX/VALVE BOX. PROTECT IN PLACE . REFER TO ELECTRICAL AND IRRIGATION PLANS FOR NEW PULLBOX/VALVE BOX LOCATIONS.
- EX. TREE TO REMAIN. PROTECT IN PLACE. REFER TO TREE PROTECTION (TPZ) PLAN
- LIMIT OF WORK (OFFSET FOR CLARITY)
- x x x EX. FENCING TO REMAIN PROTECT IN PLACE.
- PLANTER FENCE. SEE DETAIL E5/L402.
- TUBULAR STEEL RAILING W/ 12" CONCRETE HEADER. SEE DETAIL A1/L404.
- PA PLANTING AREA

EXISTING-PROTECT IN PLACE (#) CONSTRUCT

1. CONCRETE PAVING. NATURAL GRAY; MED. BROOM FINISH. SEE CIVIL SHEETS.
2. COLORED CONCRETE PAVING. COLOR: SALMON; MED. BROOM FINISH. SEE DETAIL A13/L404 AND CIVIL SHEETS.
3. CLEAN AIR VEHICLE SPACE (6 TOTAL). SEE SETAIL J13/L404.
4. CONTROL JOINT. SEE CIVIL SHEETS.
5. FLAG POLE. PROVIDE/INSTALL 30' CONICAL ALUMINUM TUBE FLAG POLE COMPLETE WITH LOCKABLE HALYARD SYSTEM/CLEATS/IN-GROUND FOOTING. CONTRACTOR TO PROVIDE SHOP DRAWINGS, AND ALL STRUCTURAL CALCULATIONS AND PERMITS.
6. SINGLE-LEAF RINO GATE. SIZE AS NOTED. SEE DETAIL E1/L403.
7. AC PAVING. SEE CIVIL SHEETS.
8. DECOMPOSED GRANITE PAVING. SEE DETAIL J13/L402.
9. 6" CONCRETE CURB. SEE CIVIL SHEETS.
10. DRIVEWAY. SEE CIVIL PLANS.
11. CURB RAMP PER CITY STD PLAN S-442-5, SEE PLAN NOTES.
12. TURF. REFER TO L701/L702 AND LANDSCAPE CONSTRUCTION NOTES.
13. 8' ADA BENCH (9 TOTAL). SEE DETAIL E13/L402.
14. EX. CHAINLINK FENCE. PROTECT IN PLACE.
15. CONCRETE HEADER. SIZE PER PLAN NOTES. SEE DETAILS E1/L402.
16. TRASH CAN (6 TOTAL). KEYSTONE RIDGE DESIGNS, INC. MODEL RE3D-55 WITH LOCK TABS, FLAT LID, NO LINER, COLOR=BLACK WITH GRAFFITI COATING. OR APPROVED EQUAL. . CONTACT: 800-284-8208.
17. RECREATION CENTER BUILDING. REFER TO ARCHITECTURAL DRAWINGS.
18. ARTWORK. (PROVIDED BY OTHERS. CONTRACTOR SHALL COORDINATE WITH ARTIST FOR INSTALLATION OF ARTWORK.
19. ROUND TABLE/CHAIRS. SIX (6) TOTAL. VICTOR STANLEY OR APPROVED EQUAL: FOUR (4) MODEL N-364 AND TWO (2) MODEL N-H-S64 WITH STEEL SLATS ON SEATS, COLOR: TITANIUM. CONTACT: DAVID SKALKA 951-299-9394.
20. ADA COMPLIANT PICNIC TABLE. (3 TOTAL) SEE DETAIL E9/L402.
21. BICYCLE STORAGE LOCKERS (2 TOTAL) (ONE 1-BIKE MODEL, AND ONE 2-BIKE MODEL) (THREE BIKE SPACES TOTAL). SEE DETAIL J5/L403.
22. TRASH ENCLOSURE. SEE ARCHITECTURAL DRAWINGS.
23. BACKFLOW PREVENTER/FENCING TO REMAIN. PROTECT IN PLACE.
24. UTILITY BOX TO REMAIN. PROTECT IN PLACE.
25. NO PARKING ZONE. PAINT CURB TOP/SIDE WITH RED TRAFFIC PAINT PER MANUFACTURER'S INSTRUCTIONS. USSC PRODUCTS OR EQUAL (800) 278-7473.
26. CONCRETE V-GUTTER. SEE CIVIL PLANS.
27. BICYCLE RACK (15 TOTAL). SEE DETAIL J1/L403.
28. DOUBLE-LEAF RINO GATE. SEE DETAIL E5/L405.
29. DRINKING FOUNTAIN (3 TOTAL). SEE DETAIL A9/L402. REFER TO CIVIL DRAWINGS FOR DOMESTIC WATER LINE.
30. EX. BASEBALL INFIELD TO REMAIN. PROTECT IN PLACE.
31. BASKETBALL COURT TO REMAIN. PROTECT IN PLACE.
32. EX. EXERCISE EQUIPMENT TO REMAIN. PROTECT IN PLACE.
33. EX. TENNIS COURTS/EQUIPMENT TO REMAIN. PROTECT IN PLACE.
34. LIGHT POLE/FIXTURE. SEE ELECTRICAL PLANS. WHERE FIXTURES ARE LOCATED WITHIN TURF AREAS, INSTALL 8" MOWSTRIP AT BASE OF FOOTING PER DETAIL A1/L405.
35. WALL/SEATWALL TO REMAIN. PROTECT IN PLACE.
36. EX. SIDEWALK TO REMAIN. PROTECT IN PLACE.
37. EX. TREE TO REMAIN. PROTECT IN PLACE.
38. EX. PLAYGROUND SURFACING AND EQUIPMENT TO REMAIN. PROTECT IN PLACE.
39. ELECTRIC VEHICLE CHARGING STATION (2 TOTAL). REFER TO ELECTRICAL DRAWINGS.
40. INTERPRETIVE SIGN (3 TOTAL). FINAL LOCATIONS PER LANDSCAPE ARCHITECT. SEE DETAIL J5/L405.
41. ADA PARKING SPACE. SEE DETAIL A1/L403.
42. ELECTRIC VEHICLE PARKING SPACE (4 TOTAL). SEE DETAIL J1/L404.
43. PICNIC TABLE (NON-ADA) (5 TOTAL). SEE DETAIL E9/L402.
44. WHEELCHAIR PARKING AREA (36"X48" CLR. SPACE)
45. PARKING STRIPING/LETTERING. SEE DETAILS J13/L403 AND J5/L404.
46. PLANTER FENCE. SEE DETAIL E5/L402.
47. TUBULAR STEEL RAILING W/ 12" CONCRETE HEADER. SEE DETAIL A1/L404.
48. DOMESTIC BACKFLOW PREVENTER/FIRE BACKFLOW PREVENTER, SEE CIVIL DRAWINGS.
49. FUTURE ELECTRIC VEHICLE CHARGING STATION. REFER TO ELECTRICAL DRAWINGS. STANDARD PARKING STRIPING ONLY/NO SIGNAGE.
50. EX. PARK SIGN TO REMAIN. PROTECT IN PLACE.
51. HANDBALL COURT WALL TO REMAIN. PROTECT IN PLACE.
52. STORAGE BOX TO REMAIN. PROTECT IN PLACE.

REPAIR DG PAVING AS REQUIRED TO PROVIDE SMOOTH TRANSITION TO EXISTING. FIELD VERIFY. COLOR TO MATCH EXISTING.

8" TYP. PROVIDE SMOOTH TRANSITION FROM NEW DG PATH TO EXISTING. COLOR TO MATCH EXISTING.

ADA SPACES=2 (1 VAN; 1 STD)
CLEAN AIR SPACES=6
EV CHARGING=4 (1 VAN; 3 STD)
TOTAL SPACES=35

WIDTH = 20' CLR.

WIDTH = 23' CLR. FIELD VERIFY

29'-8" CLR. WIDTH BOTH GATES, FIELD VERIFY

BEGIN

RYE STREET

BEEMAN AVENUE

N

0 10' 20' 40'

SCALE: 1" = 20'

BUREAU OF ENGINEERING
OFFICIAL RECORD

CITY OF LOS ANGELES
DEPARTMENT OF PUBLIC WORKS
BUREAU OF ENGINEERING
CITY OF LOS ANGELES ENGINEERING

NO.	REVISIONS:	DATE:	BY:

BUILDING NO.

INDEX NO. RP-300106

LANDSCAPE ARCHITECT ★ CALIFORNIA ★ LICENSED
No. 3060
Renewal Date
Signature
Print Name
Date
STATE OF CALIFORNIA

CITY ENGINEER

	DATE:
ARCHITECT: RICHARD W. FISHER LIC. NO. 3060	04/30/19
DESIGNED BY: RICHARD W. FISHER	04/30/19
DRAWN BY: GREG MOSSER	04/30/19
CHECKED BY: JANE ADRIAN	04/30/19
APPROVED BY: MAHMOOD KARIMZADEH, A.I.A. DEPUTY CITY ENGINEER	04/30/19

TED ALLEN, PE
ARCHITECTURAL DIVISION

CITY OF LOS ANGELES
DEPARTMENT OF PUBLIC WORKS

CLIENT: DEPARTMENT OF RECREATION AND PARKS
GENERAL MANAGER: MICHAEL A. SHULL

SHEET TITLE: CONSTRUCTION PLAN

PROJECT: STUDIO CITY GYMNASIUM

ADDRESS: 12621 RYE STREET
STUDIO CITY, CA 91604

WORK ORDER NO. E170267B

PLAN FILE NO.

DRAWING NO. L401

SHEET 195 OF SHEETS 211

REVISION DATES (DESIGN STAGE ONLY)

THE CITY OF LOS ANGELES OR ITS OFFICERS OR AGENTS SHALL NOT BE RESPONSIBLE FOR THE ACCURACY OR COMPLETENESS OF ELECTRONIC COPIES OF THIS PLAN SHEET.

TEMPLATE SHEET REVISION DATE: 08/2014
REVISION DATE: 5/15/2019 5:44 PM
FILE: Q:\IN-HOUSE-DESIGN\STUDIO CITY GYMNASIUM (RL)\18_DESIGN\LANDSCAPE\WORKING CDS\SCRC-CONSTRUCTION PLAN L401.DWG

PLOTTED: 6/24/2019 3:59 PM

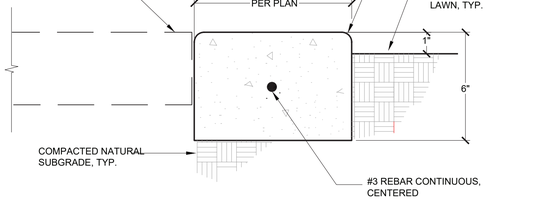

SECTION

NOTES:
1. SCORE MOW STRIP AT 10' O.C. MAX. AND AT ALL CHANGES IN DIRECTION SIMILAR TO CONCRETE PAVING DETAIL.
2. WHEN MOW STRIP IS INSTALLED ADJACENT TO EXISTING A.C. PAVING, THE EXISTING A.C. PAVING SHALL BE SAW-CUT 12" FROM THE EDGE OF THE MOW STRIP AND NEW ASPHALT CONCRETE PLACED AFTER MOW STRIP IS IN PLACE.

RP VERSION 08-14-98/JPH

E1	CONCRETE MOW STRIP/HEADER	
N.T.S.	BOE VERSION Feb/08 - RF,SD	RP DETAIL 3200

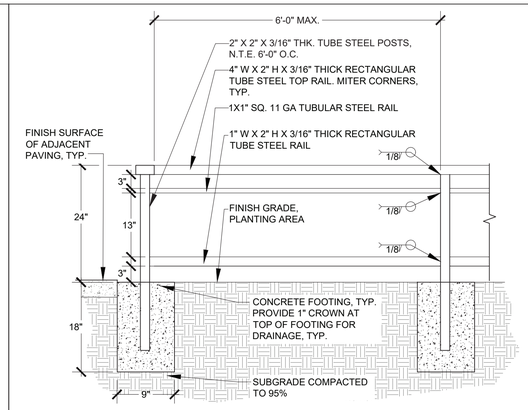

NOTES:
1. FABRICATION AND PAINTING:
   - GRIND ALL WELDS SMOOTH, REMOVE ALL LOOSE MILL SCALE, RUST, OIL AND GREASE
   - ALL FENCING SHALL BE SHOP BE GALVANIZED UNDER INSPECTION BY BUREAU OF CONTRACT ADMINISTRATION (PLANT INSPECTION).
   - FINISH TO MATCH EXISTING.

E5	PLANTER FENCE	
N.T.S.		

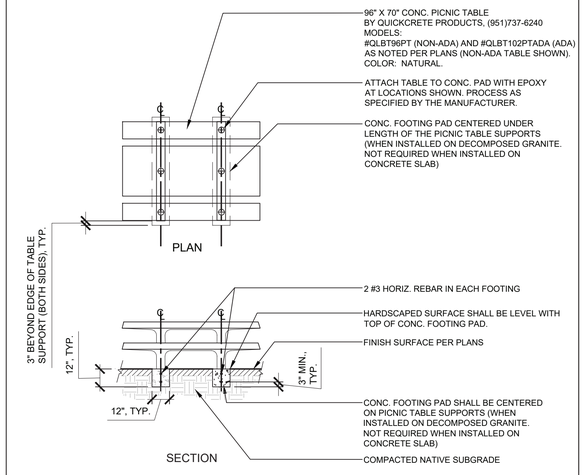

SECTION

E9	PICNIC TABLE INSTALLATION	
N.T.S.		RP DETAIL 831

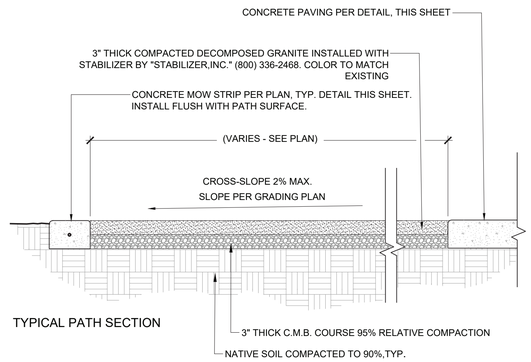

TYPICAL PATH SECTION

NOTES:

1. ALL D.G. PATHS SHALL NOT EXCEED A RUNNING SLOPE GREATER THAN 6%. SEE GRADING PLAN

2. DECOMPOSED GRANITE MATERIAL SHALL BE PRE-MIXED WITH STABILIZER (AMOUNT/RATIO PER MANUFACTURER'S RECOMMENDATION) BY SUPPLIER OR BATCH MIXED ON SITE PRIOR TO PLACEMENT TO ENSURE THOROUGH AND EVEN DISTRIBUTION THROUGHOUT MIXTURE. SEE LANDSCAPE CONSTRUCTION NOTES.

J13	DECOMPOSED GRANITE PATH WITH CONCRETE HEADER	
N.T.S.		RP DETAIL L3820

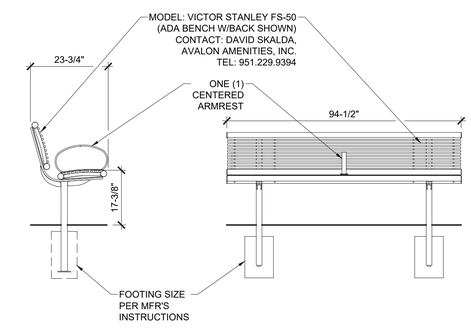

NOTES:
1. MODEL: VICTOR STANLEY FS-50 CONTACT: DAVID SKALDA, AVALON AMENITIES, INC. 951.229.9394. INSTALL MODEL WITH BACK AND ONE (1) CENTERED ARMREST IN MIDDLE OF BENCH; AND SKATE STOP GUARDS AT FAR ENDS OF BENCH (TWO (2) SKATE STOPS TOTAL PER BENCH, NOT SHOWN IN DETAIL).
2. IN-GROUND MOUNT PER MFR'S INSTRUCTIONS.
3. COLOR: TITANIUM
4. ALL FABRICATED METAL COMPONENTS SHALL BE STEEL SHOTBLASTED, ETCHED, PHOSPHATIZED, PREHEATED, AND ELECTROSTATICALLY POWDER-COATED WITH T.G.I.C. POLYESTER POWDER COATINGS AND FULLY CLEANED AND PRETREATED, PREHEATED AND COATED WHILE HOT TO FILL CREVICES AND BUILD COATING FILM. COATED PARTS SHALLTHEN BE FULLY CURED TO COATING MANUFACTURER'S SPECIFICATIONS. THE THICKNESS OF THE RESULTING FINISH SHALL AVERAGE 8-10 MILS (200-250 MICRONS).

E13	8' BENCH	
N.T.S.		

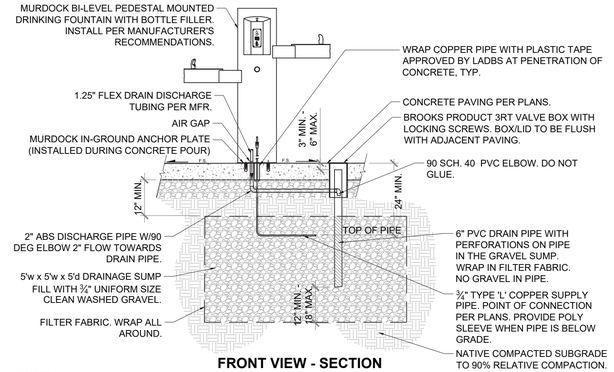

FRONT VIEW - SECTION
NOT TO SCALE

NOTE:

1. MDL# IS GYQ84-CV-IAP-RAP. CONTACT BOB MAHR (BMAHR@MURDOCKMFG.COM) FROM THE MURDOCK CO. SO AS TO GUARANTEE DELIVERY OF THE CORRECT FOUNTAIN.

2. CONTRACTOR TO SUBMIT SHOP DRAWINGS TO THE CITY'S PROJECT MANAGER FOR APPROVAL PRIOR TO FABRICATION AND INSTALLATION.

3. REFER TO MANUFACTURER'S INSTALLATION & MAINTENANCE INSTRUCTIONS FOR OPTION INSTALLATION.

A9	MURDOCK ACCESSIBLE DRINKING FOUNTAIN	
N.T.S.	BOE Version Aug/18	RP DETAIL L1732

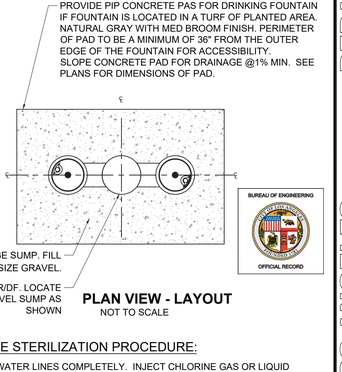

PLAN VIEW - LAYOUT
NOT TO SCALE

DOMESTIC LINE STERILIZATION PROCEDURE:

FLUSH DOMESTIC WATER LINES COMPLETELY. INJECT CHLORINE GAS OR LIQUID DISINFECTANT INTO LINE THROUGH A ⅜" SERVICE COCK USING A PROPORTIONING PUMP AT A POINT AS CLOSE AS IS PRACTICAL TO THE WATER METER. OPEN BUBBLERS ON ALL UNITS INSTALLED SUFFICIENTLY TO DISTRIBUTE DISINFECTANT THROUGHOUT SYSTEM, SO THAT A MINIMUM CONCENTRATION OF 50 PPM, AS VERIFIED BY TEST, IS MEASURED AT ALL UNITS. DISINFECTANT SHALL REMAIN IN SYSTEM FOR 24 HOURS MINIMUM. AT CONCLUSION, RESIDUAL RETENTION OF DISINFECTANT SHALL NOT BE LESS THAN 10 PPM. ALL LINES SHALL BE FLUSHED THOROUGHLY. A WATER SAMPLE SHALL BE TESTED BY AN APPROVED TESTING LABORATORY. RESULTS SHALL SHOW:
- COLIFORM-AEROGENES ORGANISMS: NEGATIVE
- TOTAL BACTERIA PLATE COUNT: LESS THAN 100/CUBIC CENTIMETER
- WATER POTABILITY: SAFE TO USE. IF RESULTS ARE NEGATIVE, STERILIZATION SHALL BE REPEATED UNTIL STANDARD IS MET.

BUREAU OF ENGINEERING
CITY OF LOS ANGELES

NO.	REVISIONS:	DATE:	BY:

BUILDING NO.

INDEX NO. RP-300106 -

LANDSCAPE ARCHITECT No. 3060 Signature Date Renewal Date 04-30-19 STATE OF CALIFORNIA LICENSED

CITY OF LOS ANGELES DEPARTMENT OF PUBLIC WORKS
BUREAU OF ENGINEERING
CITY ENGINEER

ARCHITECT:	TED ALLEN, PE	DATE:	04/30/19
	ARCHITECTURAL DIVISION		
DESIGNED BY:	RICHARD W. FISHER	LIC. NO. 3060	04/30/19
DRAWN BY:	GREG MOESER		04/30/19
CHECKED BY:	JANE ADRIAN		04/30/19
APPROVED BY:	MAHMOOD KARIMZADEH, A.I.A. DEPUTY CITY ENGINEER		04/30/19

CLIENT: DEPARTMENT OF RECREATION AND PARKS
GENERAL MANAGER: MICHAEL A. SHULL

SHEET TITLE: CONSTRUCTION DETAILS SHEET 1

PROJECT: STUDIO CITY GYMNASIUM

ADDRESS: 12621 RYE STREET STUDIO CITY, CA 91604

WORK ORDER NO. E170267B

PLAN FILE NO.

DRAWING NO. L402

SHEET 196 OF SHEETS 211

PLOTTED: 6/24/2019 4:08 PM

THE CITY OF LOS ANGELES OR ITS OFFICERS OR AGENTS SHALL NOT BE RESPONSIBLE FOR THE ACCURACY OR COMPLETENESS OF ELECTRONIC COPIES OF THIS PLAN SHEET.

TEMPLATE SHEET REVISION DATE: 08/2014
REVISION DATE: 6/24/2019 3:16 PM
FILE: Q:\IN-HOUSE-DESIGN\STUDIO CITY GYMNASIUM (RL)\18_DESIGN\LANDSCAPE\WORKING CDS\SCRC-CONSTRUCTION DETAILS L402-L405.DWG

REVISION DATES (DESIGN GRADE ONLY)

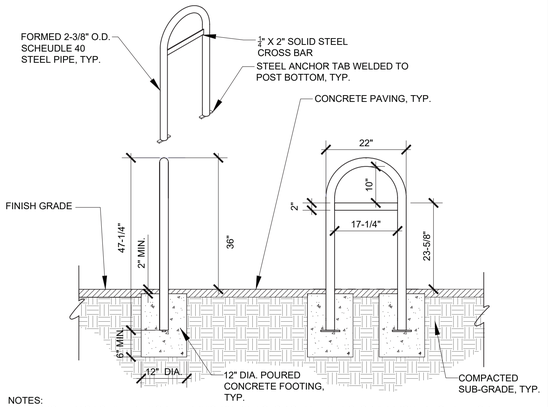

NOTES:
1. BICYCLE RACK SHALL BE MODEL: BRWS-161 BY VICTOR STANLEY, INC. OR APPROVED EQUAL. FOR ORDERING CONTACT: DAVID SKALKA, AVALON AMENITIES, (951) 299-9394. SEE DRAWINGS FOR QUANTITY AND LOCATION.
2. ALL FABRICATED METAL COMPONENTS SHALL BE STEEL SHOTBLASTED, ETCHED, PHOSPHATIZED, PREHEATED, AND ELECTROSTATICALLY POWDER-COATED WITH T.G.I.C. POLYESTER POWDER COATING. THE THICKNESS OF THE RESULTING FINISH SHALL AVERAGE 8-10 MILS (200-250 MICRONS). FINISH SHALL BE BLACK.

J1	BIKE RACK
N.T.S.	

DL1 MODEL (ONE-BIKE MODEL)

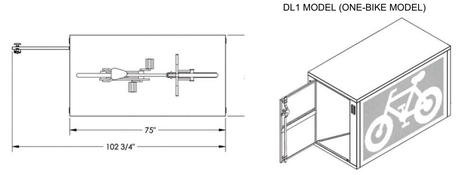

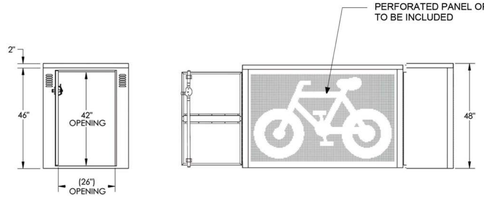

DL2 MODEL (TWO-BIKE MODEL)

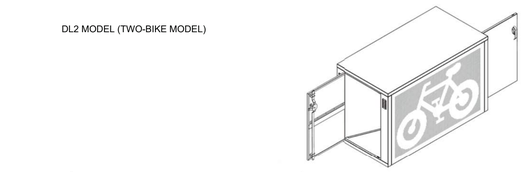

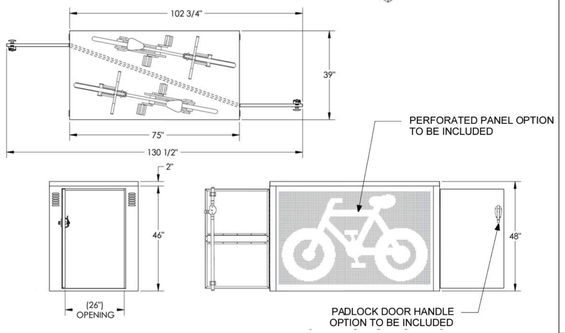

NOTES:
1. BIKE LOCKER SHALL BE DURA BIKE LOCKER, MODEL DL1 OR DL2 (ONE OR TWO BIKE MODEL) AS NOTED PER PLAN OR APPROVED EQUAL. SHALL INCLUDE PADLOCK HANDLE, PERFORATED PANELS ON BOTH SIDES, COLOR: SILVER GRAY, WITH ANTI-GRAFFITI COATING.
2. AVAILABLE FROM: DURA BIKE LOCKER, 4019 LEOS LN. #3, CARMICHAEL, CA 95608. PHONE (916) 488-7026. SEE LANDSCAPE CONSTRUCTION NOTES FOR ADDITIONAL INFORMATION.
3. ASSEMBLE UNIT AND MOUNT TO CONCRETE PAVING PER MANUFACTURER'S INSTRUCTIONS.

J5	BICYCLE LOCKER
N.T.S.	

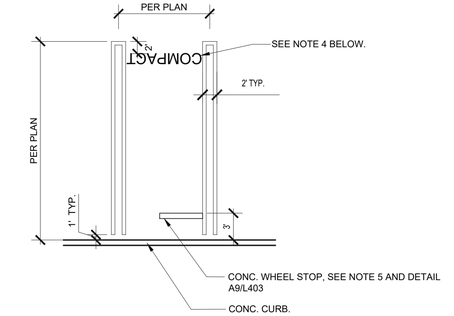

NOTES:

1. PARKING STALL LINES SHOWN ON STRIPING PLANS ARE DIAGRAMATIC. LINES SHALL BE PAINTED WHITE WITH 4" STROKES IN ACCORDACE WITH THIS DETAIL. ALL STRIPING SHALL BE PAINTED FAST DRY TRAFFIC PAINT PER MANUFACTURER'S INSTRUCTIONS. TOTAL THICKNESS OF PAINT SHALL BE 15 MIL.

2. SEE LANDSCAPE CONSTRUCTION PLAN FOR ACTUAL STALL DIMENSIONS.

3. STRIPING PER LOS ANGELES DEPARTMENT OF BUILDING AND SAFETY DOC. NO. P/ZC 2002-001.

4. FOR COMPACT SPACES, INSTALL "COMPACT" LETTERING PER DETAIL J5/L404.

5. INSTALL WHEEL STOPS WHERE INDICATED ON PLANS. FOR STALLS WITH A 2' CURB OVERHANG, ELIMINATE WHEEL STOP.

J13	PARKING STALL STRIPING
N.T.S.	DETAIL 3--

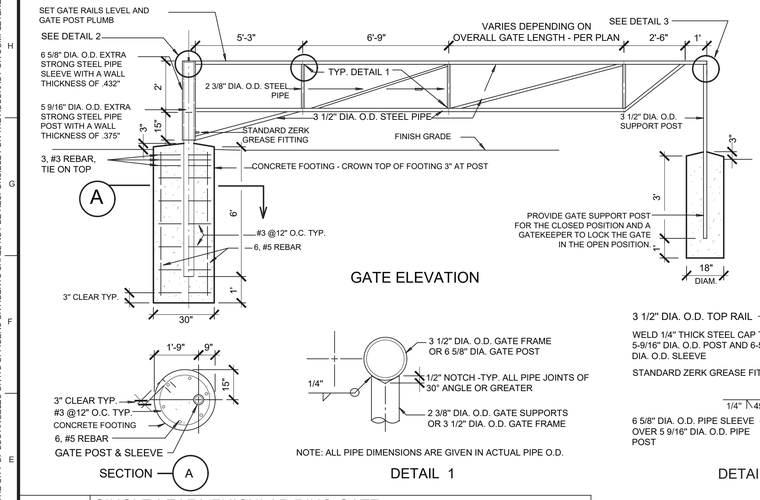

GATE ELEVATION

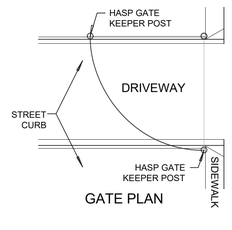

GATE PLAN

GATE SPECIFICATIONS

1. FABRICATION AND PAINTING: GATE SHALL BE SHOP-FABRICATED AND PAINTED. FABRICATION AND PAINTING SHALL BE DONE UNDER BUREAU OF CONTRACT ADMINISTRATION INSPECTION.
2. ALL PIPE FOR GATE CONSTRUCTION SHALL BE NON-GALVANIZED STEEL.
3. PIPE FOR GATE CONSTRUCTION SHALL BE AS FOLLOWS:
   A. TOP AND BOTTOM RAILS, DIAGONAL AND VERTICAL BRACING AND SUPPORT POSTS SHALL BE SCH. 40 STANDARD STEEL.
   B. 5-9/16" DIAM. O.D. PIPE POST SHALL BE HIGH STRENGTH STEEL PIPE; WALL THICKNESS SHALL BE 0.375".
   C. 6 5/8" DIA. O.D. PIPE POST SLEEVE SHALL BE HIGH STRENGTH STEEL PIPE; WALL THICKNESS SHALL BE 0.432".
4. ALL WELDS SHALL BE GROUND SMOOTH. ALL WELDS SHALL BE PER A.N.S.I./A.W.S. D1.1.81.
5. PROVIDE AND INSTALL AN ADDITIONAL SUPPORT POST TO SECURE THE GATE WHEN FULLY OPEN. THE GATE KEEPER UPPORT POST SHALL HAVE A HASP AS INDICATE IN THE DETAIL AT LEFT.
6. ADJUST THE HEIGHT OF THE GATE AND SUPPORT POSTS TO ACCOMMODATE THE EXISTING GRADES.
7. COLOR AND FINISH:
   A. ALL EXTERIOR SURFACES SHALL BE CLEANED WITH "OAKITE" OR EQUAL PRIOR TO PRIMING.
   B. ALL EXTERIOR COMPONENTS SHALL BE PRIMED WITH ONE COAT OF RUST-INHIBITING ZINC PRIMER (NO PRIMER OR PAINT ON 5-9/16" DIAM POST).
   C. ALL EXTERIORCOMPONENTS SHALL BE PAINTED WITH TWO COATS OF ACRYLIC ENAMEL; COLOR SHALL BE 'OSHA' NO. 2166 (WHITE)
8. PRIOR TO INSTALATION OF GATE, COMPLETELY COAT THE ENTIRE ABOVE GRADE SURFACE OF THE 5-9/16" DIA. O.D. GATE POST WITH GREASE. AFTER THE GATE IS INSTALLED FILLTHE SPACE BETWEEN THE POST SLEEVE AND POST WITH ADDITIONAL GREASE USINGBOTH GREASE FITTINGS.

NOTE: ALL PIPE DIMENSIONS ARE GIVEN IN ACTUAL PIPE O.D.

DETAIL 1

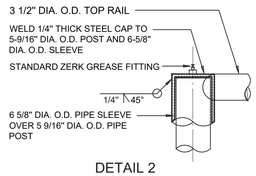

DETAIL 2

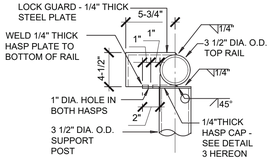

3A: LOCK GUARD-END VIEW

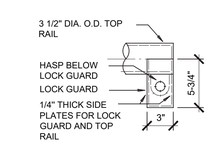

3B: LOCK GUARD TOP VIEW

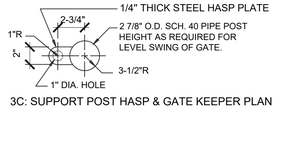

3C: SUPPORT POST HASP & GATE KEEPER PLAN

DETAILS 3A-3C: HASP AND LOCK GUARD

E1	SINGLE-LEAF VEHICULAR RINO GATE
N.T.S.	RP DETAIL --

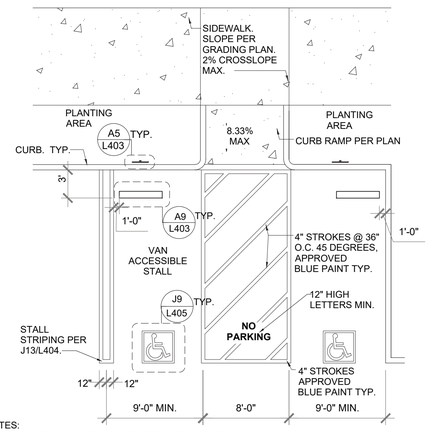

NOTES:
1. SHALL COMPLY WITH LADBS DOC. P/BC 2017-084.
2. THE CENTERLINE OF THE INTERNATIONAL SYMBOL OF ACCESSIBILITY SHALL BE A MAXIMUM OF 6" FROM THE CENTERLINE OF THE PARKING SPACE, ITS SIDES PARALLEL TO THE LENGTH OF THE PARKING SPACE AND ITS LOWER CORNER AT, OR LOWER CORNER ALIGNED WITH, THE END OF THE PARKING SPACE.
3. STRIPING SHALL BE PAINTED FAST DRY TRAFFIC PAINT PER MANUFACTURER'S INSTRUCTIONS, THICKNESS SHALL BE 15 MIL.

A1	ADA PARKING SPACE LAYOUT
N.T.S.	RP DETAIL 500.1

VAN ACCESSIBLE PARKING SIGN

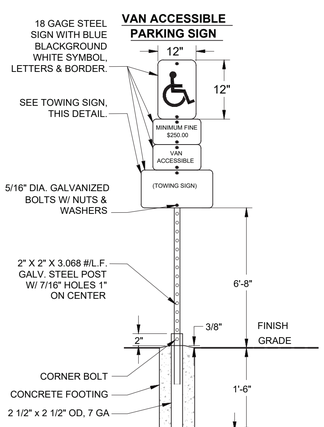

ACCESSIBLE PARKING SIGN
(SEE VAN SIGN FOR TYP. DETAILING)

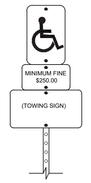

TOWING SIGN

UNAUTHORIZED VEHICLES PARKED IN DESIGNATED ACCESSIBLE SPACES NOT DISPLAYING DISTINGUISHING PLACARDS OR SPECIAL LICENSE PLATES ISSUED FOR PERSONS WITH DISABILITIES WILL BE TOWED AWAY AT THE OWNER'S EXPENSE. TOWED VEHICLES MAY BE RECLAIMED AT ARCHER'S TOWING AND RECOVERY OR BY TELEPHONING (818) 982-1464

17" MIN.

22" MIN.

NOTE:
LETTERING SHALL HAVE A MINIMUM HEIGHT OF 1 INCH.

A5	ACCESSIBLE PARKING SIGNS
N.T.S.	

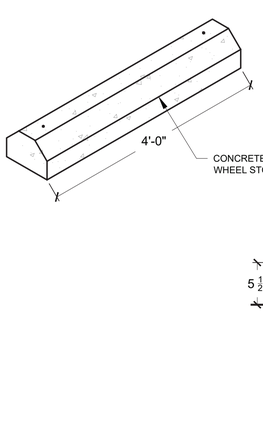

NOTES
1. CONTRACTOR MAY SALVAGE EXISTING WHEEL STOP, WITH INSPECTOR APPROVAL.
2. WHEEL STOP SHALL BE PREFABRICATED P.C. CONCRETE - 3500 PSI

A9	CONCRETE WHEEL STOP
N.T.S.	

NOTES:
1. THE WORDS "NO PARKING" SHALL BE PAINTED IN WHITE LETTERS NO LESS THAN 1'-0" HIGH ON A CONTRASTING BACKGROUND AND LOCATED SO THAT IS VISIBLE TO TRAFFIC ENFORCEMENT OFFICIALS.
2. SHALL BE PAINTED WITH TWO COATS OF FAST DRY TRAFFIC PAINT, TOTAL THICKNESS SHALL BE 15 MIL.

A13	NO PARKING DETAIL
N.T.S.	

BUREAU OF ENGINEERING
OFFICIAL RECORD

ENGINEERING
CITY OF LOS ANGELES

BUREAU OF ENGINEERING

NO.	REVISIONS:	DATE:	BY:

BUILDING NO.

INDEX NO. RP-300106 -

LANDSCAPE ARCHITECT — LICENSED — STATE OF CALIFORNIA
No. 3060
Signature
Registration Renewal Date
04-30-19

CITY OF LOS ANGELES DEPARTMENT OF PUBLIC WORKS

TED ALLEN, PE
CITY ENGINEER
ARCHITECTURAL DIVISION

ARCHITECT:	RICHARD W. FISHER	LIC. NO. 3060	DATE: 04/30/19
DESIGNED BY:	RICHARD W. FISHER		04/30/19
DRAWN BY:	GREG MOESER		04/30/19
CHECKED BY:	JANE ADRIAN		04/30/19
APPROVED BY:	MAHMOOD FARMZADEH, A.I.A. DEPUTY CITY ENGINEER		

CLIENT: DEPARTMENT OF RECREATION AND PARKS
GENERAL MANAGER: MICHAEL A. SHULL

SHEET TITLE: CONSTRUCTION DETAILS SHEET 2

PROJECT: STUDIO CITY GYMNASIUM

ADDRESS: 12621 RYE STREET STUDIO CITY, CA 91604

WORK ORDER NO. E170267B
PLAN FILE NO.
DRAWING NO. L403
SHEET 197 OF SHEETS 211

PLOTTED: 6/24/2019 4:08 PM

THE CITY OF LOS ANGELES OR ITS OFFICERS OR AGENTS SHALL NOT BE RESPONSIBLE FOR THE ACCURACY OR COMPLETENESS OF ELECTRONIC COPIES OF THIS PLAN SHEET.

TEMPLATE SHEET REVISION DATE: 08/2014
REVISION DATE: 6/24/2019 3:16 PM
FILE: Q:\IN-HOUSE-DESIGNS\STUDIO CITY GYMNASIUM (RL)\18_DESIGN\LANDSCAPE\WORKING CDS\SCRC-CONSTRUCTION DETAILS L402-L405.DWG

REVISION DATES (DESIGN STAGE ONLY)

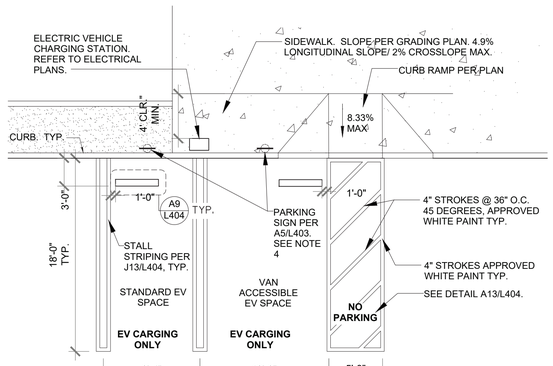

NOTES:
1. CONTRACTOR SHALL PROVIDED CHARGING STATION SIGNAGE IN COMPLIANCE WITH CALIFORNIA BUILDING CODE SECTION 11B-812.8.
2. "EV CHARGING ONLY" SHALL BEIN LETTERS 12 INCHES HIGH MINIMUM. THE CENTERLINE OF THE TEXT SHALL BE A MAXIMUM OF 6 INCHES FROM THE CENTERLINE OF THE VEHICLE SPACE AND ITS LOWER CORNER AT, OR LOWER SIDE ALIGNED WITH, THE END OF THE PARKING SPACE LENGTH.
3. STRIPING SHALL BE PAINTED WITH TWO COATS OF FAST DRY TRAFFIC PAINT. TOTAL THICKNESS OF PAINT SHALL BE 15 MIL.
4. CONFIRM PARKING SIGN TEXT/GRAPHICS WITH PROJECT MANAGER PRIOR TO ORDERING.
5. INTERNATIONAL SYMBOL OF ACCESSIBILITY NOT REQUIRED ON PARKING SPACE.

J1 | ELECTRIC VEHICLE PARKING SPACE LAYOUT
N.T.S. | RP DETAIL 500.1

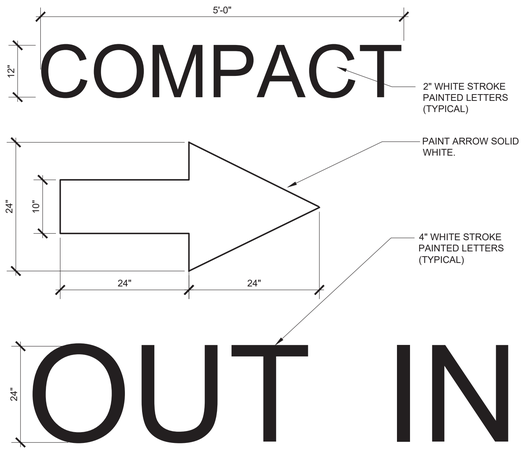

J5 | TYPICAL LETTERS AND ARROWS
N.T.S. | RP DETAIL 612

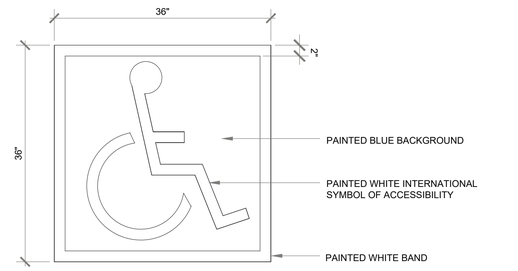

NOTES:
1. THE SYMBOL SHALL CONSIST OF A WHITE FIGURE ON A BLUE BACKGROUND. THE BLUE SHALL BE COLOR NO. 15090 IN FEDERAL STANDARD 595B.
2. ALL WORK SHALL COMPLY WITH "THE AMERICANS WITH DISABILITIES ACT (ADA) OF 1990".
3. THE SYMBOL SHALL COMPLY WITH SHALL COMPLY WITH 11B-703.7.2.1.
4. THE CENTERLINE OF THE INTERNATIONAL SYMBOL OF ACCESSIBILITY SHALL BE A MAXIMUM OF 6" FROM THE CENTERLINE OF THE PARKING SPACE, ITS SIDES PARALLELL TO THE LENGTH OF THE PARKING SPACE AND ITS LOWER CORNER AT OR LOWER SIDE ALIGNED WITH THE END OF THE PARKING SPACE.
5. SHALL BE PAINTED WITH TWO COATS OF FAST DRY TRAFFIC PAINT. TOTAL THICKNESS OF PAINT SHALL BE 15 MIL.

J9 | INTERNATIONAL SYMBOL OF ACCESSIBILITY
N.T.S. | DETAIL 3--

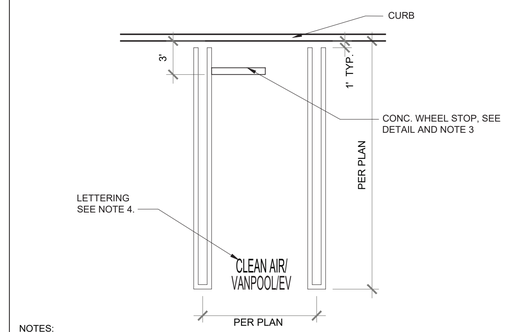

NOTES:
1. PARKING STALL LINES SHOWN ON STRIPING PLANS ARE DIAGRAMATIC. LINES SHALL BE PAINTED WHITE WITH 4" STROKES IN ACCORDACE WITH THIS DETAIL. ALL STRIPING SHALL BE PAINTED WITH TWO COATS OF FAST DRY TRAFFIC PAINT. TOTAL THICKNESS OF PAINT SHALL BE 15 MIL. STRIPING PER LOS ANGELES DEPARTMENT OF BUILDING AND SAFETY DOC. NO. P/ZC 2002-001
2. SEE LANDSCAPE CONSTRUCTION PLAN FOR ACTUAL STALL DIMENSIONS.
3. FOR STALLS WITH A 2' CURB OVERHANG, ELIMINATE WHEEL STOP.
4. LETTERING: PARKING SPACE LETTERING SHALL BE PAINTED IN THE PAINT USED FOR STALL STRIPING, AND SHALL BE 12 INCHES HIGH. THE CENTERLINE OF THE TEXT SHALL BE A MAXIMUM OF 6 INCHES FROM THE CENTERLINE OF THE VEHICLE SPACE AND ITS LOWER SIDE ALIGNED WITH, THE END OF THE PARKING SPACE LENGTH.

J13 | CLEAN AIR VEHICLE PARKING SPACE
N.T.S. |

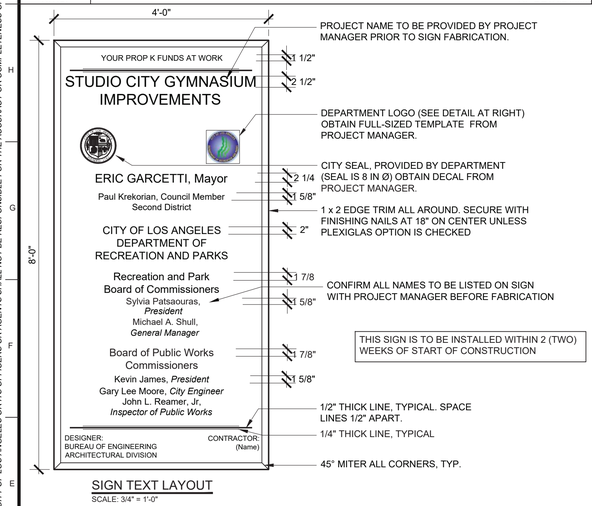

THIS SIGN IS TO BE INSTALLED WITHIN 2 (TWO) WEEKS OF START OF CONSTRUCTION

SIGN TEXT LAYOUT
SCALE: 3/4" = 1'-0"

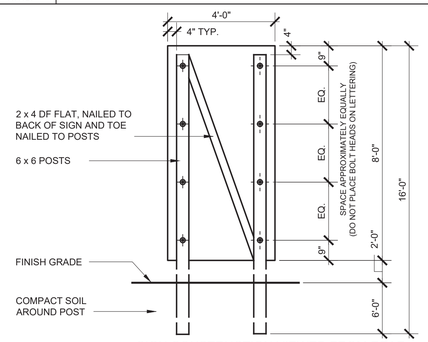

SIGN CONSTRUCTION VIEWED FROM REAR
SCALE: 3/8" = 1'-0"

NOTES:
1. SIGN GRAPHIC AND TEXT SHALL BE APPROVED BY PROJECT MANAGER PRIOR TO CONSTRUCTION.
2. SIGN SHALL BE CONSTRUCTED OF 3/4" ACX PLYWOOD. LETTERING SHALL BE PLACED ON "A" SIDE. 1" X 2" TRIM ALL AROUND, FLAT SIDE TO FACE, SECURE WITH WOOD GLUE AND 1 1/4" LONG WIRE BRADS.
3. PAINT ALL EXPOSED WOOD SURFACES WITH ONE COAT PRIMER AND TWO COATS ENAMEL. PER DUNN-EDWARDS PRINTED SPECIFICATIONS, OR APPROVED EQUAL. COLORS: SIGN, TRIM, POSTS, AND DIAGONAL BRACING-SNOWCAP (WHITE) Q9-36P; ALL LETTERING (EXCLUDING CITY SEAL) AND TREE SILHOUETTE DESIGN SHALL BE EMORALD GREEN.
4. SECURE SIGN TO 6 X 6 POSTS WITH 1/2" DIAMETER CARRIAGE BOLTS OF SUFFICIENT LENGTH TO SECURE SIGN TO POSTS. FOUR BOLTS PER POST. PROVIDE GALVANIZED WASHERS UNDER NUTS. DO NOT PLACE BOLTS THROUGH LETTERING.
5. AT COMPLETION OF PROJECT. CONTRACTOR SHALL REMOVE SIGN AND DELIVER TO RECREATION AND PARKS CENTRAL SERVICE YARD. 3900 CHEVY CHASE BLVD., LOS ANGELES.
6. IF BOX TO LEFT IS CHECKED, ENTIRE FACE OF SIGN SHALL BE COVERED WITH 4' X 8' X 3/16" SHEET OF CLEAR, PLEXIGLAS. SECURE TO FACE OF SIGN WITH 1" X 2" EDGE TRIM. SECURE EDGE TRIM WITH NUMBER 12 X 1-1/4" STAINLESS STEEL FLAT HEAD WOOD SCREWS. SPACE AT 18" ON CENTER. AROUND PERIMETER OF SIGN.
7. SEE NOTICE TO CONTRACTORS FOR ADDITIONAL INFORMATION AND REQUIREMENTS. SIGN SHALL BE INSTALLED WITHIN TWO WEEKS OF THE START OF CONSTRUCTION.

E1 | PARK CONSTRUCTION SIGN
AS NOTED |

OBTAIN FULL SCALE COLOR FACSIMILE OF DEPARTMENT LOGO FROM PROJECT MANAGER

DETAIL OF DEPARTMENT LOGO
NOT TO SCALE

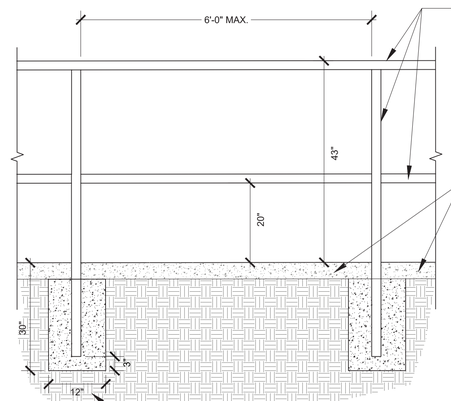

SECTION

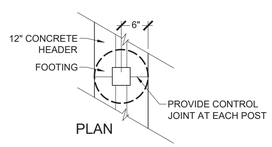

PLAN

NOTES:
1. RAILING TO MATCH EXISTING. FIELD VERIFY ALL DIMENSIONS.
2. FABRICATION AND PAINTING:
   - GRIND ALL WELDS SMOOTH. REMOVE ALL LOOSE MILL SCALE, RUST, OIL AND GREASE.
   - ALL FENCING SHALL BE GALVANIZED UNDER INSPECTION BY BUREAU OF CONTRACT ADMINISTRATION (PLANT INSPECTION).

A1 | PLAYGROUND RAILING
N.T.S. |

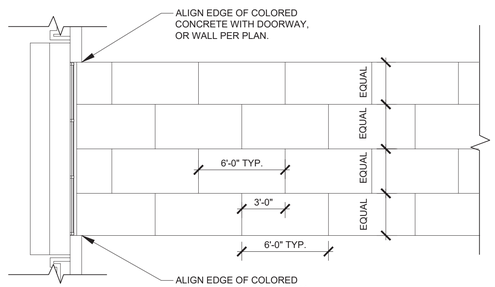

NOTES:
1. ALSO REFER TO LANDSCAPE CONSTRUCTION NOTES AND CIVIL PLANS.
2. FORMING TO BE APPROVED PRIOR TO POURING CONCRETE.

A13 | COLORED CONCRETE SCORELINE PATTERN
N.T.S. |

BUREAU OF ENGINEERING
OFFICIAL RECORD

BUREAU OF ENGINEERING
ENGINEERING
CITY OF LOS ANGELES

REVISIONS: NO. | DATE: | BY:

BUILDING NO.

INDEX NO. - RP-300106

LANDSCAPE ARCHITECT ★ FINNEY ★ LICENSED ★ STATE OF CALIFORNIA
No. 3060
Signature
Date 04-30-19
Renewal Date 08-31-19

BUREAU OF PUBLIC WORKS
CITY OF LOS ANGELES
DEPARTMENT OF PUBLIC

CITY ENGINEER | DATE:
LIC. NO. 3060 | 04/30/19
ARCHITECTURAL DIVISION | 04/30/19
TED ALLEN, PE | 04/30/19
ARCHITECT: | 04/30/19
DESIGNED BY: RICHARD W. FISHER
DRAWN BY: RICHARD W. FISHER
CHECKED BY: GREG MOESER
APPROVED BY: JANE ADRIAN
APPROVED BY: MAHMOOD KARIMZADEH, A.I.A. DEPUTY CITY ENGINEER

CLIENT: DEPARTMENT OF RECREATION AND PARKS
GENERAL MANAGER: MICHAEL A. SHULL

SHEET TITLE: CONSTRUCTION DETAILS SHEET 3
PROJECT: STUDIO CITY GYMNASIUM
ADDRESS: 12621 RYE STREET STUDIO CITY, CA 91604

WORK ORDER NO. E170267B
PLAN FILE NO.
DRAWING NO. L404
SHEET 198 OF SHEETS 211

PLOTTED: 6/24/2019 4:09 PM

THE CITY OF LOS ANGELES OR ITS OFFICERS OR AGENTS SHALL NOT BE RESPONSIBLE FOR THE ACCURACY OR COMPLETENESS OF ELECTRONIC COPIES OF THIS PLAN SHEET.

TEMPLATE SHEET REVISION DATE: 08/2014
REVISION DATE: 6/24/2019 3:16 PM
FILE: Q:\IN-HOUSE-DESIGN\STUDIO CITY GYMNASIUM (RU)\18_DESIGN\LANDSCAPE\WORKING CD\SGRC-CONSTRUCTION DETAILS L402-L405.DWG

REVISION DATES (DESIGN STAGE ONLY)

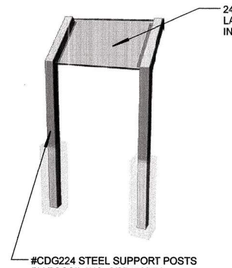

NOTE:

CONTRACTOR SHALL PROVIDE AND INSTALL THE TYPE AND QUANTITY OF INTERPRETIVE SIGN PANELS AND SUPPORTS PER PLAN AND DETAIL.

FINAL LOCATION OF EACH PANEL SHALL BE APPROVED BY PROJECT MANAGER PRIOR TO INSTALLATION.

MANUFACTURER CONTACT INFO:

FOSSIL INC.
MARK DE CESARE
(800) 244-9809 x320

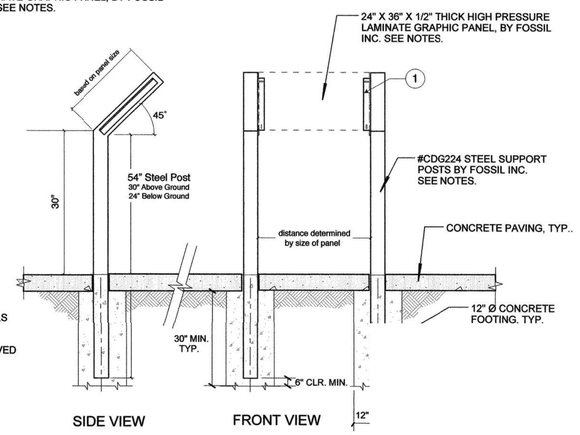

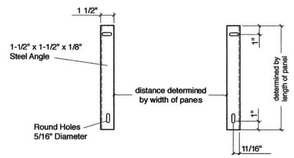

1 Mounting "L" Shape

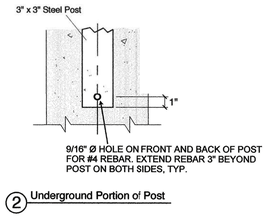

2 Underground Portion of Post

INTERPRETIVE PANEL NOTES:

1.) 24" X 36" X 1/2" THICK SIGN PANELS MUST BE MANUFACTURED AS DIGITAL HIGH PRESSURE LAMINATE (DHPL) COMPOSED OF SEVERAL LAYERS OF PHENOLIC RESIN IMPREGNATED KRAFT FILLER PAPER, A DIGITALLY IMAGED EMBEDDED GRAPHIC, A LAYER OF MELAMINE RESIN, AND SURFACED BY A LAYER OF TRANSLUCENT EXTERIOR UV / GRAFFITI-RESISTANT OVERLAY PROTECTION AS SUPPLIED BY FOSSIL INDUSTRIES, INC., (631) 245-4172, WWW.FOSSILGRAPHICS.COM, OR APPROVED EQUAL.

2.) THE ENTIRE PANEL, INCLUDING EXTERIOR OVERLAY, MUST BE BONDED UNDER HEAT AND EXTREME PRESSURE TO FORM A COMPOSITE PANEL. THE FINISH MUST BE SMOOTHLY TEXTURED WITH REFLECTIVITY OF 30 + OR (5) GLOSS UNITS. THE DHPL GRAPHICS MUST BE WARRANTED FOR A MINIMUM OF 10 YEARS AGAINST FADING, DE-LAMINATION AND WEATHER DETERIORATION.

3.) EMBEDDED GRAPHICS MUST BE MADE USING A 12-COLOR HIGH-DEFINITION PRINT AT 200 DPI.

4.) GRAPHIC IMAGE FILES AS NECESSARY FOR PRODUCTION OF EACH INDIVIDUAL SIGN PANEL SPECIFIED WILL BE SUPPLIED BY THE PROJECT MANAGER AT THE TIME OF FABRICATION.

5.) SIGN PANEL MANUFACTURER SHALL PROVIDE A PRODUCTION QUALITY SAMPLE FROM A SUPPLIED GRAPHIC FILE FOR APPROVAL PRIOR TO FINAL FABRICATION AND DELIVERY.

J5	INTERPRETIVE SIGNAGE PANEL	
N.T.S.		

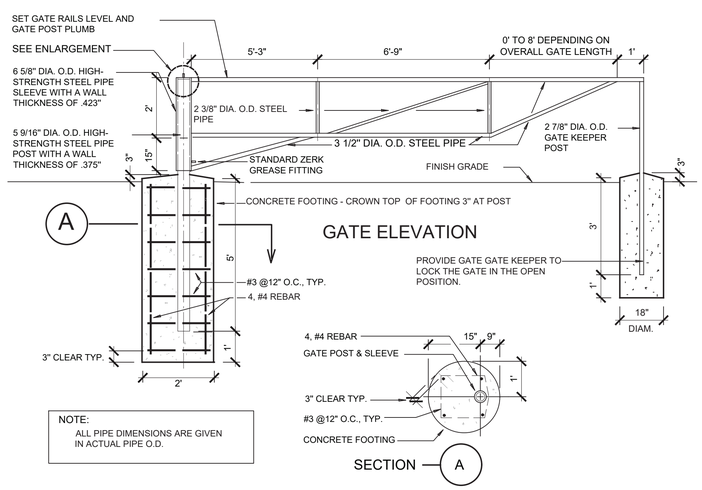

NOTE:
ALL PIPE DIMENSIONS ARE GIVEN IN ACTUAL PIPE O.D.

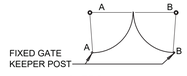

NOTE: PROVIDE TWO GATE KEEPER SUPPORT POSTS; ONE FOR EACH GATE LEAF PER PLAN.

GATE PLAN

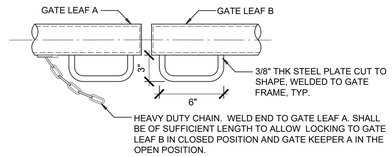

GATE FRAME /LOCK TOP VIEW
CLOSED POSITION

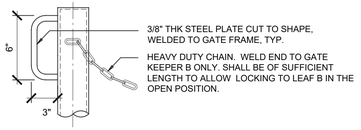

GATE KEEPER POST
SIDE VIEW

GATE SPECIFICATIONS

1. FABRICATION AND PAINTING: GATE SHALL BE SHOP-FABRICATED AND PAINTED. FABRICATION AND PAINTING SHALL BE DONE UNDER BUREAU OF CONTRACT ADMINISTRATION. INSPECTION.
2. ALL PIPE FOR GATE CONSTRUCTION SHALL BE NON-GALVANIZED STEEL.
3. PIPE FOR GATE CONSTRUCTION SHALL BE AS FOLLOWS:
   A. TOP AND BOTTOM RAILS, DIAGONAL AND VERTICAL BRACING AND SUPPORT POSTS SHALL BE SCH. 40 STANDARD STEEL.
   B. 5-9/16" DIAM. O.D. PIPE POST SHALL BE HIGH STRENGTH STEEL PIPE; WALL THICKNESS SHALL BE 0.375".
   C. 6 5/8" DIA. O.D. PIPE POST SLEEVE SHALL BE HIGH STRENGTH STEEL PIPE; WALL THICKNESS SHALL BE 0.432".
4. ALL WELDS SHALL BE GROUND SMOOTH. ALL WELDS SHALL BE PER A.N.S.I./A.W.S. D1.1.81.
5. PROVIDE AND INSTALL AN ADDITIONAL SUPPORT POST TO SECURE THE GATE WHEN FULLY OPEN.
6. ADJUST THE HEIGHT OF THE GATE AND SUPPORT POSTS TO ACCOMMODATE THE EXISTING GRADES.
7. COLOR AND FINISH:
   A. ALL EXTERIOR SURFACES SHALL BE CLEANED WITH "OAKITE" OR EQUAL PRIOR TO PRIMING
   B. ALL EXTERIOR COMPONENTS SHALL BE PRIMED WITH ONE COAT OF RUST-INHIBITING ZINC PRIMER (NO PRIMER OR PAINT ON 5-9/16" DIAM POST).
   C. ALL EXTERIORCOMPONENTS SHALL BE PAINTED WITH TWO COATS OF ACRYLIC ENAMEL; COLOR SHALL BE 'OSHA' NO. 2166 (WHITE)
8. PRIOR TO INSTALATION OF GATE, COMPLETELY COAT THE ENTIRE ABOVE GRADE SURFACE OF THE 5-9/16" DIA. O.D. GATE POST WITH GREASE. AFTER THE GATE IS INSTALLED FILLTHE SPACE BETWEEN THE POST SLEEVE AND POST WITH ADDITIONAL GREASE USINGBOTH GREASE FITTINGS.

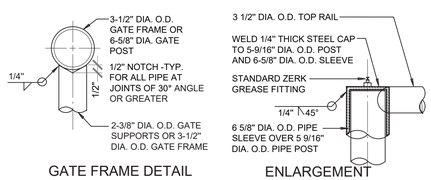

GATE FRAME DETAIL

ENLARGEMENT

E5	DOUBLE-LEAF VEHICULAR RINO GATE	
N.T.S.		RP DETAIL --

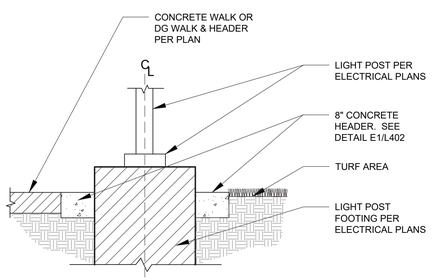

CONDITION A - TURF AREA ADJACENT TO CONCRETE WALK/DG PATH

SECTION

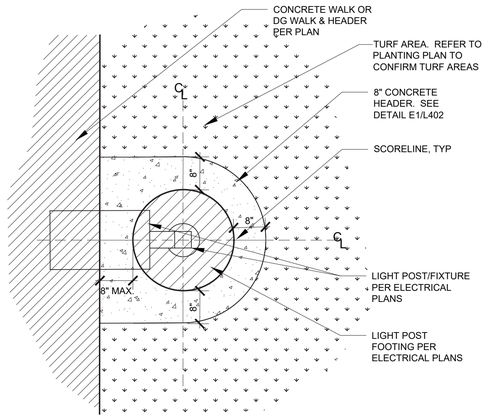

CONDITION A - ADJACENT TO CONCRETE WALK/DG PATH

PLAN VIEW

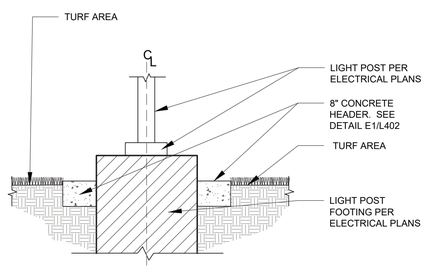

CONDITION B - TURF AREA

SECTION

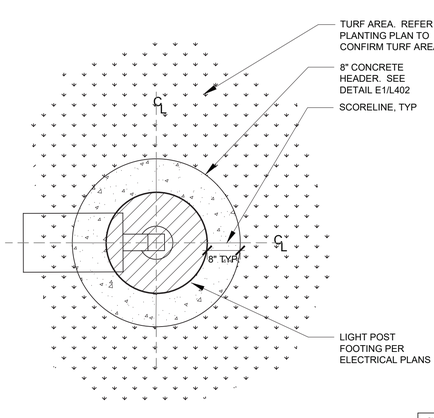

CONDITION B - TURF AREA

PLAN VIEW

A1	MOWCURB/HEADER AT LIGHT POST (TURF AREAS)	
N.T.S.		N.T.S.

NOTES:
1. LIGHT POSTS IN NON-TURF AREAS DO NOT REQUIRE A HEADER.

BUREAU OF ENGINEERING
OFFICIAL RECORD

BUREAU OF ENGINEERING
ENGINEERING
CITY OF LOS ANGELES

NO.	REVISIONS:	DATE:	BY:

BUILDING NO.

INDEX NO. RP-300106 -

LANDSCAPE ARCHITECT ★ FINIS ★ LICENSED
No. 3060
Signature
Date
Renewal Date
Oct. 30, 19
STATE OF CALIFORNIA

CITY OF LOS ANGELES DEPARTMENT OF PUBLIC WORKS
BUREAU OF ENGINEERING
CITY ENGINEER

TED ALLEN, PE

ARCHITECTURAL DIVISION			
ARCHITECT:	RICHARD W. FISHER	LIC. NO. 3060	04/30/19
DESIGNED BY:	RICHARD W. FISHER		04/30/19
DRAWN BY:	GREG MOESER		04/30/19
CHECKED BY:	JANE ADRIAN		04/30/19
APPROVED BY:	MAHMOOD KARIMZADEH, A.I.A. DEPUTY CITY ENGINEER		

CITY OF LOS ANGELES DEPARTMENT OF RECREATION AND PARKS
CLIENT:
GENERAL MANAGER: MICHAEL A. SHULL

SHEET TITLE: CONSTRUCTION DETAILS
SHEET 4

PROJECT: STUDIO CITY GYMNASIUM

ADDRESS: 12621 RYE STREET
STUDIO CITY, CA 91604

WORK ORDER NO.
E170267B

PLAN FILE NO.

DRAWING NO.
L405

SHEET 199 OF SHEETS 211

PLOTTED: 6/24/2019 4:09 PM

REVISION DATES (DESIGN & STAMP ONLY)

TEMPLATE SHEET REVISION DATE: 08/2014
REVISION DATE: 6/24/2019 3:16 PM
FILE: Q:\IN+HOUSE-DESIGN\STUDIO CITY GYMNASIUM (RJL)\18_DESIGN\LANDSCAPE\WORKING CDS\SCRC-CONSTRUCTION DETAILS L402-L405.DWG

THE CITY OF LOS ANGELES OR ITS OFFICERS OR AGENTS SHALL NOT BE RESPONSIBLE FOR THE ACCURACY OR COMPLETENESS OF ELECTRONIC COPIES OF THIS PLAN SHEET.

NOTE: EX. MAINLINE, LATERALS, VALVES, AND HEADS TO THE NORTH TO REMAIN, PROTECT IN PLACE.
REFER TO IRRIGATION PLAN AND AS-BUILT PLANS FOR ADDITIONAL INFORMATION/DIRECTION.
VALVES/HEADS TO REMAIN SHALL REMAIN OPERATIONAL DURING CONSTRUCTION.

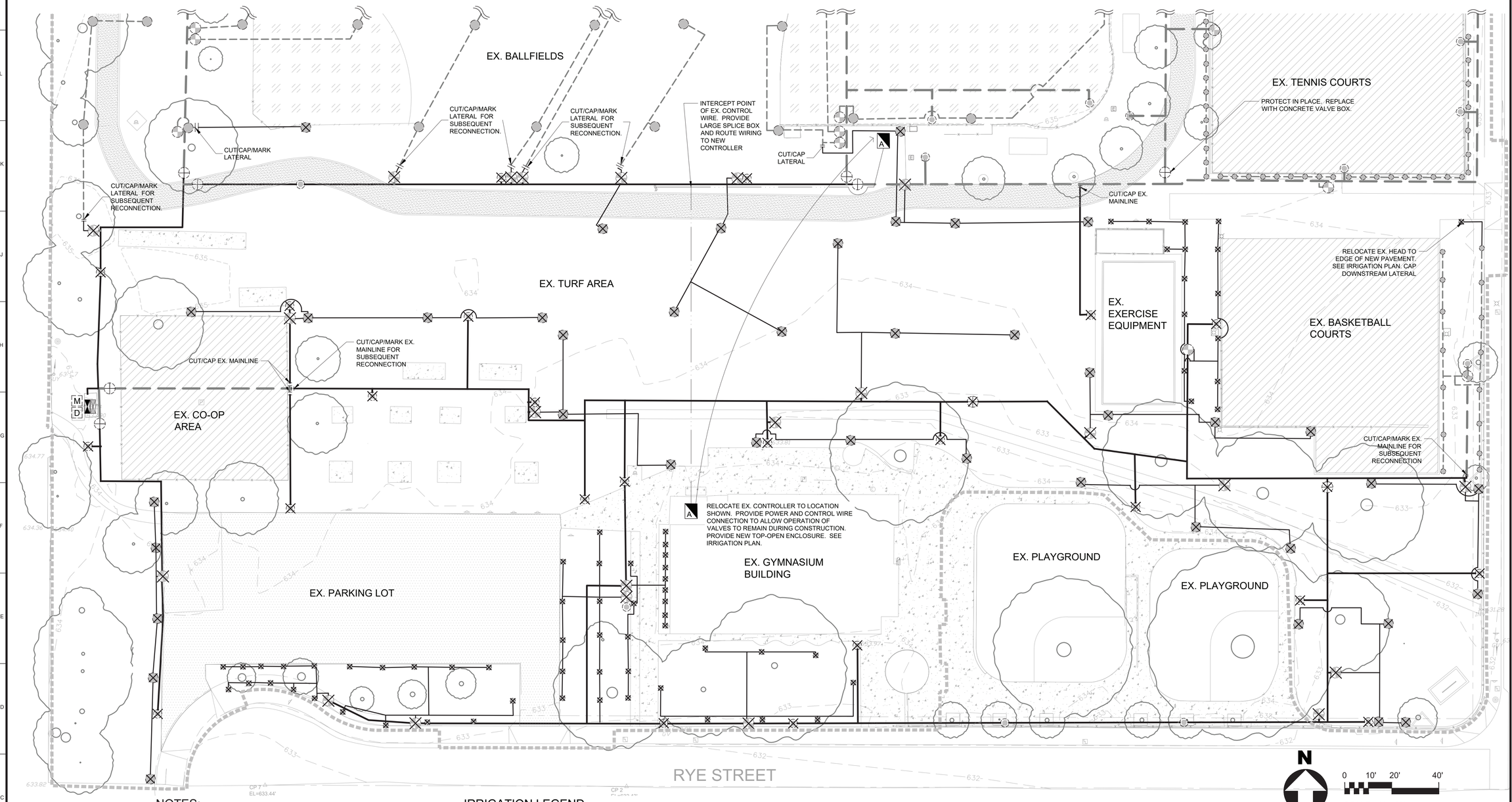

N

0 10' 20' 40'

SCALE: 1" = 20'

NOTES:

1. EXISTING TREES SHALL BE PROTECTED DURING CONSTRUCTION ACTIVITIES IN ACCORDANCE WITH THE LANDSCAPE CONSTRUCTION NOTES AND TREE PROTECTION PLAN, L101/L102 AND DETAIL J5/L605.
2. IRRIGATION TO ALL EXISTING LANDSCAPING NOT SPECIFICALLY DESIGNATED FOR REMOVAL SHALL BE KEPT IN OPERATION FOR THE DURATION OF THE PROJECT. CONTRACTOR SHALL BE RESPONSIBLE FOR HAND WATERING ALL IMPACTED LANDSCAPE AREAS IF NECESSITATED BY TEMPORARY SHUTDOWNS TO OR DEMOLITION OF EXISTING IRRIGATION SYSTEMS.

IRRIGATION LEGEND

SYMBOL	DESCRIPTION
M	Existing Irrigation meter to remain. Protect in place. (Note: Irrigation is separate from domestic). HIGH STATIC PRESSURE - 195 PSI/LOW STATIC PRESSURE - 121 PSI; INFORMATION PROVIDED BY LADWP ON 02/06/2018
D	Existing domestic meter to remain. Protect in place.
	EXISTING Irrigation backflow prevention device with pressure reducing valve to remain. Protect in place. Contractor shall verify the functionality of the existing equipment and provide confirmation to Construction Manager.
	Existing domestic backflow prevention device to remain. Protect in place. See civil drawings.
A	Existing Irrigation controller. Relocate Ex. Controller per plan. Provide temporary power and control wire connection to allow irrigation function to valves to remain during construction.
	Existing gate valve to remain. Protect in place.

SYMBOL	DESCRIPTION
	Existing gate valve to be removed and disposed off-site. Salvage or dispose off-site per RAP representative.
	Existing Remote Control Valve to remain. Protect in place.
	Existing Remote Control Valve to be removed. Salvage or dispose off-site per RAP representative.
	Existing Quick Coupler to remain. Protect in place.
	Existing Quick Coupler to be removed and salvaged or disposed off-site per RAP representative.
	Existing Rotor/Spray head and associated lateral lines to remain. Protect in place.
	Existing Rotor/Spray head to be removed and salvaged or disposed off-site per RAP representative. Lateral piping to be abandoned in place.

SYMBOL	DESCRIPTION
	Existing mainline piping to remain. Protect in place.
	Existing mainline piping to be abandoned in place.
	Existing lateral piping to remain. Protect in place.
	Existing lateral piping to be abandoned in place.
	Limit of Work

DIGALERT
Call Toll Free 1-800-227-2600
TWO WORKING DAYS BEFORE YOU DIG
Underground Service Alert of Southern California

BUREAU OF ENGINEERING
OFFICIAL RECORD

THE CITY OF LOS ANGELES OR ITS OFFICERS OR AGENTS SHALL NOT BE RESPONSIBLE FOR THE ACCURACY OR COMPLETENESS OF ELECTRONIC COPIES OF THIS PLAN SHEET.

TEMPLATE SHEET REVISION DATE: 08/2014
REVISION DATE: 6/24/2019 9:26 AM
FILE: Q:\IN-HOUSE-DESIGN\STUDIO CITY GYMNASIUM (RL)\18_DESIGN\LANDSCAPE\WORKING CDS\SCRC-IRRIGATION-DEMO PLAN L600X.DWG

REVISION DATES (DESIGN STAGE ONLY)

PLOTTED: 6/24/2019 4:10 PM

CITY OF LOS ANGELES DEPARTMENT OF PUBLIC WORKS BUREAU OF ENGINEERING

ENGINEERING
CITY OF LOS ANGELES

NO.	REVISIONS:	DATE:	BY:

BUILDING NO.

INDEX NO. RP-300106

LANDSCAPE ARCHITECT ★ STATE OF CALIFORNIA ★ LICENSED
No. 3060
Prepared By: Date
Reviewed By: Date
Approved By: Date

CITY ENGINEER

	DATE:
	04/30/19
	04/30/19
	04/30/19
	04/30/19
	04/30/19

TED ALLEN, PE
LIC. NO. 3060
ARCHITECTURAL DIVISION

ARCHITECT: RICHARD W. FISHER
DESIGNED BY: RICHARD W. FISHER
DRAWN BY: GREG MOSER
CHECKED BY: JANE ADRIAN
APPROVED BY: MAHMOOD KARIMZADEH, A.I.A. DEPUTY CITY ENGINEER

CLIENT: DEPARTMENT OF RECREATION AND PARKS
GENERAL MANAGER: MICHAEL A. SHULL

SHEET TITLE: IRRIGATION DEMOLITION PLAN
PROJECT: STUDIO CITY GYMNASIUM
ADDRESS: 12621 RYE STREET STUDIO CITY, CA 91604

WORK ORDER NO. E170267B
PLAN FILE NO.
DRAWING NO. L600
SHEET 200 OF SHEETS 211

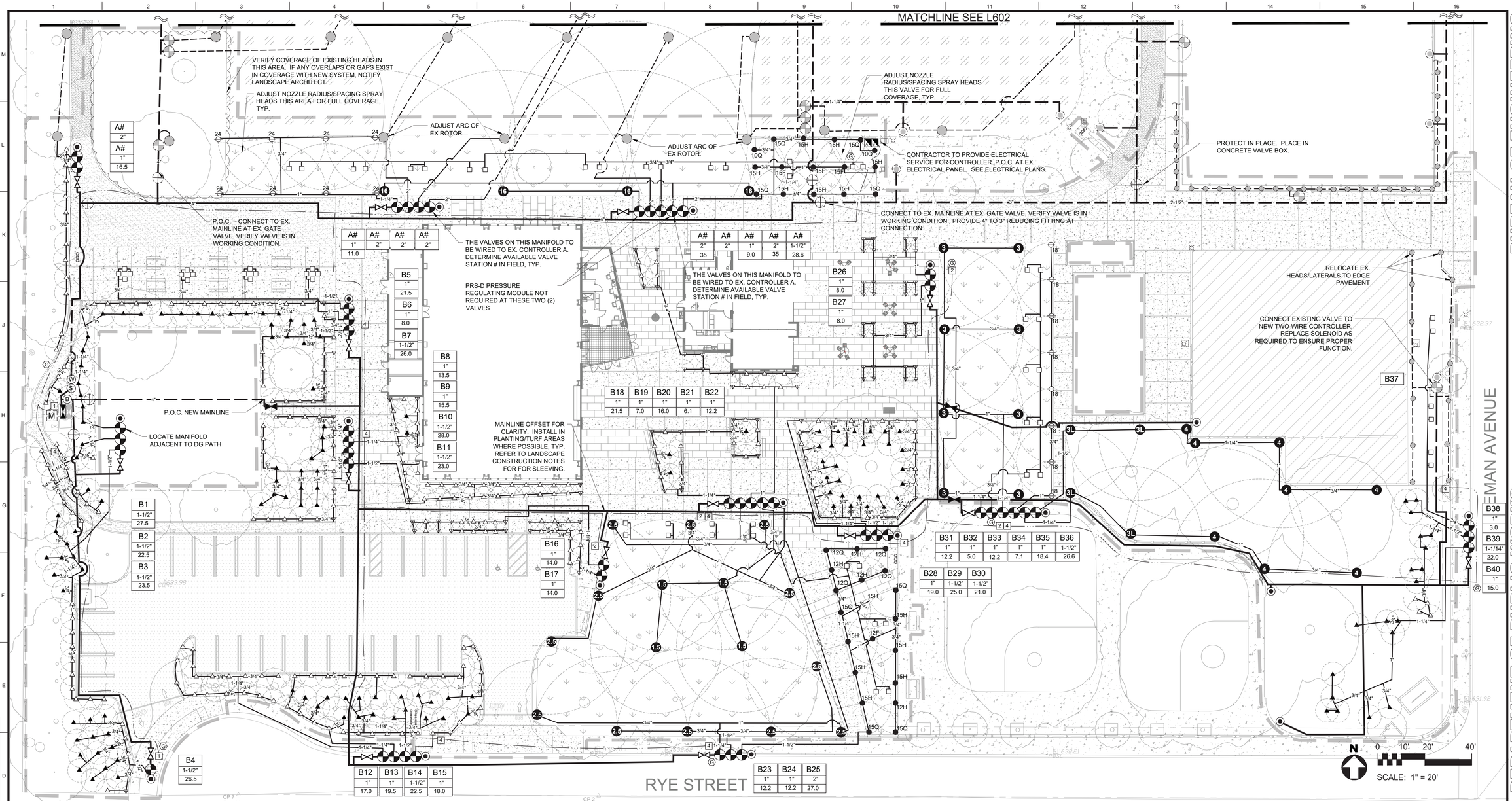

IRRIGATION EQUIPMENT LEGEND

SYMBOL	DESCRIPTION
M	Existing Irrigation meter to remain. Protect in place. (Note: Irrigation is separate from domestic). HIGH STATIC PRESSURE - 195 PSI/LOW STATIC PRESSURE - 121 PSI; INFORMATION PROVIDED BY LADWP ON 02/06/2018
	Existing domestic backflow prevention device with pressure reducing valve to remain. Protect in place. See civil plans.
	Existing Irrigation backflow prevention device with pressure reducing valve to remain. Protect in place. Contractor shall verify the functionality of the existing equipment and provide confirmation to Construction Manager.
	Controller A: Existing Weathermatic Smartline SL4800 irrigation controller (conventional irrigation wiring). Reinstall per plan in Stainless Steel VIT Strongbox Pedestal per detail A9/L605 and manufacturer's instructions. Install with new Weathermatic model #SL-AIRCARD-FLOW5FW Smartlink Flow Aircard w/5 year service plan w/flow and warranty, and Weathermatic model #SLW5 wireless rain sensor. Rain sensor to be located in field by Landscape Architect. Existing valves shall be reconnected to relocated controller unless otherwise noted. Ex. station numbers to remain unless otherwise noted.
	Controller B: Rainmaster Eagle Plus 2-wire Controller (two-wire system wiring), model EGP-TW-PSB, in Stainless Steel VIT Strongbox Pedestal per detail A9/L605 and manufacturer's instructions. Install with EGP-iCentral Cellular Communications kit , additional 60-months of iCentral service (Cellular) RM-ISVC-5Y and Toro TWRS Wireless RainSensor per manufacturers' instructions. Final location of sensor to be determined in field with Landscape Architect.
B	Bermad model #IR-4"-910E0-00-G03-G-C-AS-PG-4R0-PP-X solenoid controlled normally open master valve with flow meter set for 1 gallon/pulse. Provide and install per detail A5/L606 and connect to Controller B per manufacturer's instructions. Master valve connects to controller using Rainmaster #TW-D-1 one valve decoder; flow-sensor is wired directly to controller using Rainmaster SEN-CAB-14 cable in conduit to match 2-wire cable.
S	Buckner Superior model#31000300 3" normally open master valve. Install per detail J5/L606 and wire to Controller A per manufacturer's instructions.
W	Weathermatic model# SLFSI-S30 3" flow sensor. Install per detail J5/L606 and wire to Controller A per manufacturer's instructions.
	Existing Gate Valve to remain. Protect in place.
	Existing Remote Control Valve to remain. Reconnect to Controller A unless otherwise noted. All downstream laterals/heads to remain. Refer to As-built drawings.
	Remote Contol Valve: Rainbird EFB-CP brass valve. Install with PRS-D pressure regulating module unless otherwise noted- see plan callout for valve size. Install per details J1/L604, J9/L604, J13/L604, & J9/L606.
	Existing Quick Coupler to remain. Protect in place.
	Two piece Quick Coupling Valve: Rainbird 44LRC, with 44K key and SH-1 hose swivel. Provide one quick coupler key and hose swivel for each five quick coupler installed, (minimum one quick coupler key). See detail E5/L604.
	4" Mainline Isolation Valve: Nibco #P-619-RW IPS push-on type gate valve or approved equal. Install per detail J5/L604.
	Manifold gate valve. Install per detail J1/L604, J9/L604, & J13/L604.
	Drinking fountain per A9/L402. See Civil plans for domestic water piping. Do not connect to irrigation system.
	Existing Mainline piping. Protect in place.
	Mainline piping, PVC Class 200 gasketed pipe w/restrained fittings per E9/L604 and E9/L606. 4" size, unless otherwise noted. Provide thrust blocks J1/L605 for sizes 3" and larger.
	Existing Lateral Line piping to remain, typ. Protect in place.
	PVC sch. 40 Lateral Line piping; solvent weld. Size as noted.

IRRIGATION VALVE LEGEND

A1 • Controller & Station No.
2" • Valve Size
12.2 • System GPM

Verify existing valve sizes in field.

Typical conventional spray system: symbol is body type, nozzle is noted for each head.

12H 12H 12Q

Typical turf rotor system (number is nozzle size):

8 3

2-WIRE EQUIPMENT LEGEND (CONTROLLER "B")

1 Rainmaster #TW-D-1 one valve decoder. Install per manufacturer's Instructions and A1/L605.

2 Rainmaster #TW-D-2 two valve decoder. Install per manufacturer's Instructions and A1/L605.

4 Rainmaster #TW-D-4 four valve decoder. Install per manufacturer's Instructions and A1/L605.

Rainmaster TW-LA-1 lightning arrestor and ground rod. Install every 600' per manufacturer's instructions and per detail E1/L605, typ.

Rainmaster TW-CAB-14 2-wire system cable. See details E9/L605 & J9/L605. (Note: Additional wiring required per details and manufacturer's instructions (not shown on plan).

IRRIGATION SLEEVING NOTE:

REFER TO LANDSCAPE CONSTRUCTION NOTES FOR SLEEVING REQUIREMENTS UNDER PAVING. CONTRACTOR SHALL SUBMIT MAINLINE ROUTING AND SLEEVING PLAN WITH MANIFOLD LOCATIONS FOR REVIEW AND APPROVAL PRIOR TO TRENCHING.

*REFER TO SHEET L603 FOR IRRIGATION AND GREEN BUILDING NOTES.

TREE PROTECTION NOTES:

EXISTING TREES SHALL BE PROTECTED DURING TRENCHING/CONSTRUCTION ACTIVITIES IN ACCORDANCE WITH THE LANDSCAPE CONSTRUCTION NOTES, L001, TREE PROTECTION PLAN, L101/L102 AND DETAIL J5/L605.

IRRIGATION HEADS LEGEND

SYMBOL	DESCRIPTION	GPM	SPACING	NOZZLE PRESSURE	PRECIP. RATE	DETAIL NUMBER	REMARKS
	Existing gear driven rotary pop-up	--		--	--	--	Verify type and location in field. Adjust per plan.
	Existing pop-up spray head	--	--	--	--	--	Verify type and location in field. Adjust per plan.
16	**Toro T7PSS-02 - 16.0 STANDARD NOZZLE** Rotary pop-up. Install w/70 psi pressure reducer swing joint per detail.	17.5	53'	70psi	.95-1.09 in/hr	A5/ L604	Full or part circle. Adjust radius as needed for full coverage.
4	**Toro T5PSS-4.0-RS - 4.0 NOZZLE** Rotary pop-up	4.1	38'	45psi	.45-.52 in/hr	A5/ L604	Full or part circle. Adjust radius as needed for full coverage.
3	**Toro T5PSS-3.0-RS - 3.0 NOZZLE** Rotary pop-up	3.05	36'	45psi	.37-.42 in/hr	A5/ L604	Full or part circle. Adjust radius as needed for full coverage.
3L	**Toro T5PSS-3.0LA RS - 3.0LA LOW ANGLE NOZZLE** Rotary pop-up	3.05	31'	45psi	.51-.59 in/hr	A5/ L604	Full or part circle. Adjust radius as needed for full coverage.
2.5	**Toro T5PSS-2.5-RS - 2.5 NOZZLE** Rotary pop-up	2.55	33'	45psi	.36-.41 in/hr	A5/ L604	Full or part circle. Adjust radius as needed for full coverage.
1.5	**Toro T5PSS-1.5LA-RS - 1.5LA LOW ANGLE NOZZLE** Rotary pop-up	1.52	28'	45psi	.3-.35 in/hr	A5/ L604	Full or part circle. Adjust radius as needed for full coverage.
24	**Rainbird 1806-SAM-PRS** Pop-up body with R-series nozzle (R-Van or Full-circle) radius as noted.	.50-3.67	17'-23'	45psi	.60-.75 in/hr	A9/ L604	Install per detail.
15H	**Rainbird 1804-SAM-PRS** Pop-up body with U-series nozzle - radius and arc as noted.	.65 -2.60	12'-15'	30psi	1.58-2.01 in/hr	A9/ L604	Install per detail.
△	**Rainbird 1804-SAM-PRS** Pop-up body with 5H-B stream bubbler nozzle.	1.00	per plan	30psi	--	A9/ L604	Install with 1800 PCS screens as needed for radius reduction. Install per detail.
▲	**Rainbird 1804-SAM-PRS** Pop-up body with 5F-B stream bubbler nozzle.	1.50	per plan	30psi	--	A9/ L604	Install with 1800 PCS screens as needed for radius reduction. Install per detail.
▽	**Rainbird 1804-SAM-PRS** Pop-up body with stream bubbler 5Q-B nozzle.	.50	per plan	30psi	--	A9/ L604	Install with 1800 PCS screens as needed for radius reduction. Install per detail.
□	**Rainbird RWS-M-B-C-1402** Root watering system assembly.	.50	per plan	30psi	--	A13/ L604	**Install per detail.**

BUREAU OF ENGINEERING
OFFICIAL RECORD

KEY MAP

SCALE: 1"=400'

DIGALERT
Call Toll Free 1-800-227-2600
TWO WORKING DAYS BEFORE YOU DIG
Underground Service Alert of Southern California

ENGINEERING
CITY OF LOS ANGELES

BUREAU OF ENGINEERING
DEPARTMENT OF PUBLIC WORKS
CITY OF LOS ANGELES

NO.	REVISIONS:	DATE:	BY:

BUILDING NO.

INDEX NO. - RP-300106

LANDSCAPE ARCHITECT ★ CALIFORNIA ★ LICENSED
No. 3060
Prof. Exp. Renewal Date
Signature
Print Name
Date
STATE OF CALIFORNIA

CITY ENGINEER

	DATE:
	04/30/19
	04/30/19
	04/30/19
	04/30/19

LIC. NO. 3060

TED ALLEN, PE
ARCHITECTURAL DIVISION

ARCHITECT: RICHARD W. FISHER
DESIGNED BY: RICHARD W. FISHER
DRAWN BY: GREG MOESER
CHECKED BY: JANE ADRIAN
APPROVED BY: MAHMOOD KARIMZADEH, A.I.A. DEPUTY CITY ENGINEER

CLIENT: DEPARTMENT OF RECREATION AND PARKS
GENERAL MANAGER: MICHAEL A. SHULL

SHEET TITLE: IRRIGATION PLAN
SHEET 1

PROJECT: STUDIO CITY GYMNASIUM
ADDRESS: 12621 RYE STREET
STUDIO CITY, CA 91604

WORK ORDER NO. E170267B
PLAN FILE NO.
DRAWING NO. L601
SHEET 201 OF SHEETS 211

PLOTTED: 6/24/2019 4:11 PM

REVISION DATES (DESIGN STAGE ONLY)

TEMPLATE SHEET REVISION DATE: 08/2014
REVISION DATE: 6/24/2019 3:54 PM
FILE: Q:\IN-HOUSE-DESIGN\STUDIO CITY GYMNASIUM (RL)\18_DESIGN\LANDSCAPE\WORKING CDS\SCRC-IRRIGATION-PLAN-L601-L603.DWG

THE CITY OF LOS ANGELES OR ITS OFFICERS OR AGENTS SHALL NOT BE RESPONSIBLE FOR THE ACCURACY OR COMPLETENESS OF ELECTRONIC COPIES OF THIS PLAN SHEET.

THE CITY OF LOS ANGELES OR ITS OFFICERS OR AGENTS SHALL NOT BE RESPONSIBLE FOR THE ACCURACY OR COMPLETENESS OF ELECTRONIC COPIES OF THIS PLAN SHEET.

TEMPLATE SHEET REVISION DATE: 08/2014
REVISION DATE: 6/24/2019 3:54 PM
FILE: O:\IN-HOUSE-DESIGNS\STUDIO CITY GYMNASIUM (RU)\18_DESIGN\LANDSCAPE\WORKING CD3\SCR\C-IRRIGATION-PLAN-L601-L603.DWG

FOR REFERENCE ONLY. NO MODIFICATIONS THIS SHEET. ONLY EXISTING IRRIGATION HEADS/LATERALS TO REMAIN IMPACTED BY CONSTRUCTION SHOWN. REFER TO EXISTING AS-BUILT PLANS FOR COMPLETE IRRIGATION LAYOUT; FIELD VERIFY LOCATIONS.

ALL VALVES TO REMAIN SHALL REMAIN IN OPERATION FOR DURATION OF THE PROJECT. SHALL BE CONNECTED TO CONTROLLER "A" WITH EXISTING STATION NUMBERING TO REMAIN.

MATCHLINE SEE L601

N

0 10' 20' 40'

SCALE: 1" = 20'

IRRIGATION EQUIPMENT LEGEND

SYMBOL	DESCRIPTION
M	Existing Irrigation meter to remain. Protect in place. (Note: Irrigation is separate from domestic). HIGH STATIC PRESSURE - 195 PSI/LOW STATIC PRESSURE - 121 PSI; INFORMATION PROVIDED BY LADWP ON 02/06/2018
	Existing domestic backflow prevention device with pressure reducing valve to remain. Protect in place. See civil plans.
	Existing Irrigation backflow prevention device with pressure reducing valve to remain. Protect in place. Contractor shall verify the functionality of the existing equipment and provide confirmation to Construction Manager.
C	Controller A: Existing Weathermatic Smartline SL4800 irrigation controller (conventional irrigation wiring). Reinstall per plan in Stainless Steel VIT Strongbox Pedestal per detail A9/L605 and manufacturer's instructions. Install with new Weathermatic model #SL-AIRCARD-FLOW5FW Smartlink Flow Aircard w/5 year service plan w/flow and warranty, and Weathermatic model #SLW5 w/wireless rain sensor. Rain sensor to be located in field by Landscape Architect. Existing valves shall be reconnected to relocated controller unless otherwise noted. Ex. station numbers to remain unless otherwise noted.
C	Controller B: Rainmaster Eagle Plus 2-wire Controller (two-wire system wiring), model EGP-TW-PSB, in Stainless Steel VIT Strongbox Pedestal per detail A9/L605 and manufacturer's instructions. Install with EGP-iCentral Cellular Communications kit , additional 60-months of iCentral service (Cellular) RM-ISVC-5Y and Toro TWRS Wireless RainSensor per manufacturers' instructions. Final location of sensor to be determined in field with Landscape Architect.
B	Bermad model #IR-4"-910E0-00-G03-G-C-A5-PG-4R0-PP-X solenoid controlled normally open master valve with flow meter set for 1 gallon/pulse. Provide and install per detail A5/L606 and connect to Controller B per manufacturer's instructions. Master valve connects to controller using Rainmaster #TW-D-1 one valve decoder; flow-sensor is wired directly to controller using Rainmaster SEN-CAB-14 cable in conduit to match 2-wire cable.
S	Buckner Superior model#31000300 3" normally open master valve. Install per detail J5/L606 and wire to Controller A per manufacturer's instructions.
W	Weathermatic model# SLFSI-S30 3" flow sensor. Install per detail J5/L606 and wire to Controller A per manufacturer's instructions.
	Existing Gate Valve to remain. Protect in place.
	Existing Remote Control Valve to remain. Reconnect to Controller A unless otherwise noted. All downstream laterals/heads to remain. Refer to As-built drawings.
	Remote Contol Valve: Rainbird EFB-CP brass valve. Install with PRS-D pressure regulating module unless otherwise noted- see plan callout for valve size. Install per details J1/L604, J9/L604, J13/L604, & J9/L606.
	Existing Quick Coupler to remain. Protect in place.
	Two piece Quick Coupling Valve: Rainbird 44LRC, with 44K key and SH-1 hose swivel. Provide one quick coupler key and hose swivel for each five quick coupler installed, (minimum one quick coupler key). See detail E5/L604.
	4" Mainline Isolation Valve: Nibco #P-619-RW IPS push-on type gate valve or approved equal. Install per detail J5/L604.
	Manifold gate valve. Install per detail J1/L604, J9/L604, & J13/L604.
	Drinking fountain per A9/L402. See Civil plans for domestic water piping. Do not connect to irrigation system.
	Existing Mainline piping. Protect in place.
	Mainline piping; PVC Class 200 gasketed pipe w/restrained fittings per E9/L604 and E9/L606. 4" size, unless otherwise noted. Provide thrust blocks J1/L605 for sizes 3" and larger.
	Existing Lateral Line piping to remain, typ. Protect in place.
	PVC sch. 40 Lateral Line piping; solvent weld. Size as noted.

IRRIGATION VALVE LEGEND

A1 • Controller & Station No.
2" • Valve Size
12.2 • System GPM

Verify existing valve sizes in field.

Typical conventional spray system: symbol is body type, nozzle is noted for each head.

12H 12H 12Q

Typical turf rotor system (number is nozzle size):

8 3

2-WIRE EQUIPMENT LEGEND (CONTROLLER "B")

1 Rainmaster #TW-D-1 one valve decoder. Install per manufacturer's Instructions and A1/L605.

2 Rainmaster #TW-D-2 two valve decoder. Install per manufacturer's Instructions and A1/L605.

4 Rainmaster #TW-D-4 four valve decoder. Install per manufacturer's Instructions and A1/L605.

G Rainmaster TW-LA-1 lightning arrestor and ground rod. Install every 600' per manufacturer's instructions and per detail E1/L605, typ.

Rainmaster TW-CAB-14 2-wire system cable. See details E9/L605 & J9/L605. (Note: Additional wiring required per details and manufacturer's instructions (not shown on plan).

IRRIGATION SLEEVING NOTE:

REFER TO LANDSCAPE CONSTRUCTION NOTES FOR SLEEVING REQUIREMENTS UNDER PAVING. CONTRACTOR SHALL SUBMIT MAINLINE ROUTING AND SLEEVING PLAN WITH MANIFOLD LOCATIONS FOR REVIEW AND APPROVAL PRIOR TO TRENCHING.

*REFER TO SHEET L603 FOR IRRIGATION AND GREEN BUILDING NOTES.

TREE PROTECTION NOTES:

EXISTING TREES SHALL BE PROTECTED DURING TRENCHING/CONSTRUCTION ACTIVITIES IN ACCORDANCE WITH THE LANDSCAPE CONSTRUCTION NOTES, L001, TREE PROTECTION PLAN, L101/L102 AND DETAIL J5/L605.

IRRIGATION HEADS LEGEND

SYMBOL	DESCRIPTION	GPM	SPACING	NOZZLE PRESSURE	PRECIP RATE	DETAIL NUMBER	REMARKS
	Existing gear driven rotary pop-up	--		--	--	--	Verify type and location in field. Adjust per plan.
	Existing pop-up spray head	--	--	--	--	--	Verify type and location in field. Adjust per plan.
16	**Toro T7PSS-02 - 16.0 STANDARD NOZZLE** Rotary pop-up. Install w/70 psi pressure reducer swing joint per detail.	17.5	53'	70psi	.95-1.09 in/hr	A5/ L604	Full or part circle. Adjust radius as needed for full coverage.
4	**Toro T5PSS-4.0-RS - 4.0 NOZZLE** Rotary pop-up	4.1	38'	45psi	.45-.52 in/hr	A5/ L604	Full or part circle. Adjust radius as needed for full coverage.
3	**Toro T5PSS-3.0-RS - 3.0 NOZZLE** Rotary pop-up	3.05	36'	45psi	.37-.42 in/hr	A5/ L604	Full or part circle. Adjust radius as needed for full coverage.
3L	**Toro T5PSS-3.0LA RS - 3.0LA LOW ANGLE NOZZLE** Rotary pop-up	3.05	31'	45psi	.51-.59 in/hr	A5/ L604	Full or part circle. Adjust radius as needed for full coverage.
2.5	**Toro T5PSS-2.5-RS - 2.5 NOZZLE** Rotary pop-up	2.55	33'	45psi	.36-.41 in/hr	A5/ L604	Full or part circle. Adjust radius as needed for full coverage.
1.5	**Toro T5PSS-1.5LA-RS - 1.5LA LOW ANGLE NOZZLE** Rotary pop-up	1.52	28'	45psi	.3-.35 in/hr	A5/ L604	Full or part circle. Adjust radius as needed for full coverage.
24	**Rainbird 1806-SAM-PRS** Pop-up body with R-series nozzle (R-Van or Full-circle) radius as noted.	.50-3.67	17-23'	45psi	.60-.75 in/hr	A9/ L604	Install per detail.
15H	**Rainbird 1804-SAM-PRS** Pop-up body with U-series nozzle - radius and arc as noted.	.65 -2.60	12'-15'	30psi	1.58-2.01 in/hr	A9/ L604	Install per detail.
	Rainbird 1804-SAM-PRS Pop-up body with SH-B stream bubbler nozzle.	1.00	per plan	30psi	--	A9/ L604	Install with 1800 PCS screens as needed for radius reduction. Install per detail.
	Rainbird 1804-SAM-PRS Pop-up body with 5F-B stream bubbler nozzle.	1.50	per plan	30psi	--	A9/ L604	Install with 1800 PCS screens as needed for radius reduction. Install per detail.
	Rainbird 1804-SAM-PRS Pop-up body with stream bubbler 5Q-B nozzle.	.50	per plan	30psi	--	A9/ L604	Install with 1800 PCS screens as needed for radius reduction. Install per detail.
	Rainbird RWS-M-B-C-1402 Root watering system assembly.	.50	per plan	30psi	--	A13/ L604	**Install per detail.**

KEY MAP

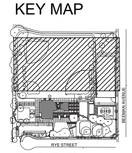

SCALE: 1"=400'

BUREAU OF ENGINEERING
OFFICIAL RECORD

DIGALERT
Call Toll Free 1-800-227-2600
TWO WORKING DAYS BEFORE YOU DIG
Underground Service Alert of Southern California

CITY OF LOS ANGELES DEPARTMENT OF PUBLIC WORKS
BUREAU OF ENGINEERING
ENGINEERING CITY OF LOS ANGELES

NO.	REVISIONS:	DATE:	BY:

BUILDING NO.

INDEX NO. _ RP-300106

TED ALLEN, PE
ARCHITECTURAL DIVISION
LIC. NO. 3060

ARCHITECT: RICHARD W. FISHER
DESIGNED BY: RICHARD W. FISHER
DRAWN BY: GREG MOESER
CHECKED BY: JANE ADRIAN
APPROVED BY: MAHMOOD KARIMZADEH, A.I.A. DEPUTY CITY ENGINEER

CITY ENGINEER

DATE:
04/30/19
04/30/19
04/30/19
04/30/19
04/30/19

CLIENT: DEPARTMENT OF RECREATION AND PARKS
GENERAL MANAGER: MICHAEL A. SHULL

SHEET TITLE: IRRIGATION PLAN
SHEET 2

PROJECT: STUDIO CITY GYMNASIUM
12621 RYE STREET
STUDIO CITY, CA 91604

ADDRESS:

WORK ORDER NO. E170267B

PLAN FILE NO.

DRAWING NO. L602

SHEET 202 OF SHEETS 211

PLOTTED: 6/24/2019 4:04 PM

GREEN BUILDING NOTES:

1. FOR PROJECTS THAT INCLUDE LANDSCAPE WORK, THE LANDSCAPE CERTIFICATION, FORM GRN 12, SHALL BE COMPLETED PRIOR TO FINAL INSPECTION APPROVAL.
2. AFTER FUNCTIONAL PERFORMANCE TESTS ARE CONCLUDED, FORM GRN 24 SHALL BE COMPLETED AND READILY AVAILABLE TO THE FIELD INSPECTOR PRIOR TO FINAL APPROVAL
3. AUTOMATIC LANDSCAPE IRRIGATORS SHALL BE INSTALLED IN SUCH A WAY THAT IT DOESN'T SPRAY ON THE BUILDING.
4. PRESSURE REGULATING DEVICES ARE REQUIRED IF WATER PRESSURE IS BELOW OR EXCEEDS THE RECOMMENDED PRESSURE OF THE SPECIFIED IRRIGATION DEVICES.
5. CHECK VALVES OR ANTI-DRAIN VALVES ARE REQUIRED ON ALL SPRINKLER HEADS WHERE LOW POINT DRAINAGE COULD OCCUR.
6. A DIAGRAM OF THE IRRIGATION PLAN SHOWING HYDROZONES SHALL BE KEPT WITH THE IRRIGATION CONTROLLER FOR SUBSEQUENT MANAGEMENT PURPOSES.
7. A CERTIFICATE OF COMPLETION SHALL BE FILLED OUT AND CERTIFIED BY EITHER THE SIGNER OF THE LANDSCAPE PLANS, THE SIGNER OF THE IRRIGATION PLANS, OR THE LICENSED LANDSCAPE CONTRACTOR FOR THE PROJECT.
8. AN IRRIGATION AUDIT REPORT SHALL BE COMPLETED AT THE TIME OF FINAL INSPECTION.
9. I HAVE COMPLIED WITH THE CRITERIA OF THE ORDINANCE AND APPLIED THEM FOR THE EFFICIENT USE OF WATER IN THE LANDSCAPE DESIGN PLANS.

09/13/2018

RICHARD FISHER, LANDSCAPE ARCHITECT DATE

IRRIGATION NOTES:

HIGH STATIC PRESSURE - 195 PSI

LOW STATIC PRESSURE - 121 PSI

INFORMATION PROVIDED BY LADWP ON 02/06/2018

1. REPORT ANY DIFFERENCE BETWEEN WATER PRESSURE INDICATED ON THE DRAWINGS AND THE ACTUAL PRESSURE READING AT THE IRRIGATION POINT OF CONNECTION TO THE PROJECT MANAGER.
2. ALL LOCAL MUNICIPAL AND STATE LAWS, RULES AND REGULATIONS GOVERNING OR RELATING TO ANY PORTION OF THIS WORK ARE HEREBY INCORPORATED INTO AND MADE A PART OF THESE PLANS AND SPECIFICATIONS AND THEIR PROVISIONS SHALL BE CARRIED OUT BY THE CONTRACTOR.
3. THE CONTRACTOR SHALL OBTAIN ALL NECESSARY PERMITS REQUIRED TO PERFORM THE WORK INDICATED HEREIN BEFORE BEGINNING WORK.
4. BEFORE COMMENCING ANY EXCAVATION, THE CONTRACTOR SHALL OBTAIN AN UNDERGROUND SERVICE ALERT I.D. NUMBER BY CALLING 1-800-422-4133. PROVIDE TWO (2) WORKING DAYS AFTER THE NUMBER IS OBTAINED AND BEFORE THE EXCAVATION WORK IS STARTED SO THAT UTILITY OWNERS CAN BE NOTIFIED.
5. ALL EXISTING IRRIGATION MAINLINE, DOMESTIC LINES, GATE VALVES, QUICK-COUPLING VALVES, AND HEADS DEPICTED HEREIN ARE BASED UPON CITY AS-BUILT RECORD DRAWINGS, AND ARE PROVIDED HERE FOR INFORMATIONAL PURPOSES ONLY. CONTRACTOR SHALL VERIFY LOCATION OF ALL EXISTING SYSTEM COMPONENTS TO REMAIN PRIOR TO ENGAGING IN CONSTRUCTION ACTIVITIES. CONTRACTOR SHALL IMMEDIATELY NOTIFY PROJECT MANAGER OF ANY DISCREPANCIES BETWEEN AS-BUILT AND EXISTING CONDITIONS.
6. THE CONTRACTOR SHALL VERIFY THE LOCATIONS OF ALL EXISTING UTILITIES, STRUCTURES AND SERVICES BEFORE COMMENCING WORK. THE LOCATIONS OF UTILITIES, STRUCTURES AND SERVICES SHOWN IN THESE PLANS ARE APPROXIMATE ONLY. ANY DISCREPANCIES BETWEEN THESE PLANS AND ACTUAL FIELD CONDITIONS SHALL BE REPORTED TO THE PROJECT MANAGER.
7. DO NOT INSTALL THE SPRINKLER SYSTEM AS SHOWN ON THE DRAWINGS WHEN IT IS OBVIOUS IN THE FIELD THAT THERE ARE UNKNOWN OBSTRUCTIONS OR GRADE DIFFERENCES IN THE AREA. SUCH OBSTRUCTIONS OR DIFFERENCES SHOULD BE BROUGHT TO THE IMMEDIATE ATTENTION OF THE PROJECT MANAGER. IN THE EVENT THAT THIS NOTIFICATION IS NOT GIVEN, THE CONTRACTOR SHALL ASSUME FULL RESPONSIBILITY FOR ANY NECESSARY MODIFICATIONS TO COMPLETED WORK.
8. IT IS THE RESPONSIBILITY OF THE IRRIGATION CONTRACTOR TO FAMILIARIZE HIMSELF WITH THE GRADE DIFFERENCES, LOCATION OF WALLS, AND UTILITIES.
9. THE IRRIGATION CONTRACTOR SHALL REPAIR OR REPLACE ALL ITEMS DAMAGED BY HIS WORK. HE SHALL COORDINATE HIS WORK WITH OTHER CONTRACTORS FOR THE LOCATION AND INSTALLATION OF PIPE SLEEVES AND LATERALS UNDER ROADWAYS AND PAVING, ETC.
10. EXISTING IRRIGATION SYSTEM COMPONENTS TO REMAIN SHALL REMAIN OPERATIONAL AT ALL TIMES DURING CONSTRUCTION. CONTRACTOR SHALL VERIFY AND DOCUMENT THE OPERATION OF ALL EXISTING IRRIGATION SYSTEM COMPONENTS AND CONTROLLERS LOCATED ADJACENT TO LIMITS OF WORK PRIOR TO THE START OF ANY WORK. THE CONTRACTOR SHALL REPAIR OR REPLACE ANY EXISTING IRRIGATION SYSTEM COMPONENTS (INCLUDING, BUT NOT LIMITED TO: HEADS, VALVES, MAINLINE, LATERAL LINES AND CONTROL WIRING, ETC.) WHICH ARE TO REMAIN, WHEN THEY INTERFERE OR ARE DAMAGED BY CONSTRUCTION. RECONSTRUCTION OF THE IRRIGATION COMPONENTS SHALL CONFORM WITH THE APPLICABLE SECTION OF THE LANDSCAPE CONSTRUCTION NOTES USING ALL NEW MATERIALS EXCEPT EXISTING IRRIGATION HEADS, WHICH MAY BE REINSTALLED IF VERIFIED TO FUNCTION PROPERLY. IF NECESSARY, CONTRACTOR SHALL HAND-WATER ANY AREAS TEMPORARILY DENIED IRRIGATION DUE TO CONSTRUCTION ACTIVITIES AT NO ADDITIONAL COST TO THE CITY.
11. THIS DESIGN IS DIAGRAMMATIC. ALL PIPING. VALVES, ETC. SHOWN WITHIN PAVED AREAS ARE FOR DESIGN CLARIFICATION ONLY AND SHALL BE INSTALLED IN PLANTING AREAS. SET ALL VALVES AND QUICK COUPLERS NEXT TO WALKS OR PAVED SURFACES PER DETAILS.
12. ANY TRENCHES DUG TO ACCOMODATE NEW IRRIGATION PIPES THAT PASS THROUGH THE TREE PROTECTION ZONE OF AN EXISTING TREE ARE SUBJECT TO THE REQUIREMENTS SPECIFIED IN THE SECTION "TREE PROTECTION GUIDELINES" OF THE LANDSCAPE CONSTRUCTION NOTES.
13. INSTALL ALL EQUIPMENT AS SHOWN IN THE DETAILS AND SPECIFICATIONS. CONTRACTOR SHALL BE RESPONSIBLE TO COMPLY WITH LOCAL CITY, COUNTY AND STATE REQUIREMENTS FOR BOTH EQUIPMENT AND INSTALLATION.
14. ALL IRRIGATION EQUIPMENT NOT OTHERWISE DETAILED OR SPECIFIED SHALL BE INSTALLED AS PER MANUFACTURER'S RECOMMENDATIONS AND SPECIFICATIONS.
15. ACTUAL LOCATION FOR THE INSTALLATION OF THE BACKFLOW PREVENTER AND THE AUTOMATIC CONTROLLER IS TO BE CONFIRMED IN THE FIELD BY THE PROJECT MANAGER PRIOR TO INSTALLATION.
16. 2-WIRE CABLE PATH SHALL GENERALLY FOLLOW MAINLINE WHERE POSSIBLE. ALL 2-WIRE CABLE SHALL BE INSTALLED IN 1-1/4" OR LARGER SCH 80 PVC CONDUIT WITH PULL BOXES EVERY 200' MAXIMUM. CONTRACTOR SHALL SUBMIT PROPOSED LOCATION OF 2-WIRE CONDUIT RUNS AND PULL BOXES FOR APPROVAL BY PROJECT ENGINEER PRIOR TO INSTALLATION.
17. ALL HEADS ARE TO BE INSTALLED WITH THE NOZZLE, SCREEN AND ARCS SHOWN ON THE PLANS. ALL HEADS ARE TO BE ADJUSTED TO PREVENT OVERSPRAY ONTO BUILDINGS, WALLS, FENCES AND HARDSCAPE. THIS INCLUDES, BUT NOT LIMITED TO, ADJUSTMENT OF DIFFUSER PIN OR ADJUSTMENT SCREW, REPLACEMENT OF PRESSURE COMPENSATING SCREENS, REPLACEMENT OF NOZZLES WITH MORE APPROPRIATE RADIUS UNITS AND THE REPLACEMENT OF NOZZLES WITH ADJUSTABLE ARC UNITS.
18. ALL SPRINKLER HEADS SHALL BE SET PERPENDICULAR TO FINISH GRADE UNLESS OTHERWISE SPECIFIED.
19. THE CONTRACTOR SHALL USE PROPER GROUNDING TECHNIQUES FOR GROUNDING THE CONTROLLER AND RELATED EQUIPMENT PER MANUFACTURERS SPECIFICATIONS.
20. THE INTENT OF THE CONTRACT IS TO PROVIDE 100% COVERAGE TO ALL PLANTING AREAS. AS PART OF THE SCOPE OF WORK, CONTRACTOR SHALL PROVIDE ANY ADDITIONAL HEADS, SPECIAL NOZZLES, OR PATTERNS TO ACHIEVE PROPER COVERAGE WITH A MINIMUM OF OVER SPRAY AT NO ADDITIONAL COST TO THE CITY.
21. UPON COMPLETION OF INSTALLATION, CONTRACTOR SHALL CONDUCT A COVERAGE TEST PER LANDSCAPE CONSTRUCTION NOTES. CONTRACTOR SHALL MAKE ANY ADJUSTMENTS IN HEAD LOCATION/SPACING OR NOZZLE SELECTION AS NECESSARY TO ACHIEVE THE BEST POSSIBLE DISTRIBUTION UNIFORMITY GIVEN EXISTING PARAMETERS OF AVAILABLE PRESSURE AND FLOW AT NO ADDITIONAL COST TO CITY UNTIL SUCH TIME AS THE NEWLY INSTALLED SYSTEM ACHIEVES THE MINIMUM COVERAGE UNIFORMITY STANDARDS AS SET BY DEPARTMENT OF RECREATION AND PARKS.
22. REFER TO LANDSCAPE CONSTRUCTION NOTES FOR ADDITIONAL INFORMATION REGARDING THIS SECTION OF WORK.

THE CITY OF LOS ANGELES OR ITS OFFICERS OR AGENTS SHALL NOT BE RESPONSIBLE FOR THE ACCURACY OR COMPLETENESS OF ELECTRONIC COPIES OF THIS PLAN SHEET.

TEMPLATE SHEET REVISION DATE: 08/2014
REVISION DATE: 6/24/2019 3:54 PM FILE: Q:\IN-HOUSE-DESIGN\STUDIO CITY GYMNASIUM (RL)\18_DESIGN\LANDSCAPE\WORKING CDS\SCRC-IRRIGATION-PLAN-L601-L603.DWG

REVISION DATES (DESIGN STAGE ONLY)

BUREAU OF ENGINEERING
OFFICIAL RECORD

DIGALERT
Call Toll Free 1-800-227-2600
TWO WORKING DAYS BEFORE YOU DIG
Underground Service Alert of Southern California

BUREAU OF ENGINEERING
ENGINEERING
CITY OF LOS ANGELES

NO.	REVISIONS:	DATE:	BY:
1			
2			
3			
4			
5			

BUILDING NO.

INDEX NO. RP-300106

LANDSCAPE ARCHITECT ★ FINNEY ★ LICENSED ★ STATE OF CALIFORNIA
No. 3060
Signature
Renewal Date
Date

CITY OF LOS ANGELES DEPARTMENT OF PUBLIC WORKS

CITY ENGINEER

	DATE:
TED ALLEN, PE	04/30/19
ARCHITECTURAL DIVISION	04/30/19
ARCHITECT: RICHARD W. FISHER LIC. NO. 3060	04/30/19
DESIGNED BY: RICHARD W. FISHER	04/30/19
DRAWN BY: GREG MOESER	04/30/19
CHECKED BY: JANE ADRIAN	04/30/19
APPROVED BY: MAHMOOD KARIMZADEH, A.I.A. DEPUTY CITY ENGINEER	04/30/19

CLIENT: DEPARTMENT OF RECREATION AND PARKS
GENERAL MANAGER: MICHAEL A. SHULL

SHEET TITLE: IRRIGATION NOTES

PROJECT: STUDIO CITY GYMNASIUM

ADDRESS: 12621 RYE STREET
STUDIO CITY, CA 91604

WORK ORDER NO. E170267B

PLAN FILE NO.

DRAWING NO. L603

SHEET 203 OF SHEETS 211

PLOTTED: 6/24/2019 4:12 PM

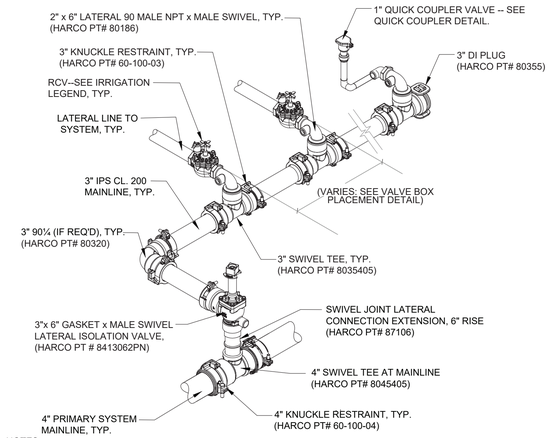

NOTES:
1.) ALL FITTINGS AND RESTRAINTS ARE AS AS MANUFACTURED BY HARCO FITTINGS (www.harcofittings.com) OR APPROVED EQUAL. INSTALL ALL FITTINGS AND RESTRAINTS PER MANUFACTURER'S INSTRUCTIONS.
2.) SEE VALVE BOX PLACEMENT, RCV INSTALLATION, AND QUICK COUPLER INSTALLATION DETAILS FOR ADDITIONAL INFORMATION.

XXX | VALVE MANIFOLD ASSEMBLY

N.T.S. | BOE VERSION 02/16/18 RWF | RP DETAIL 135

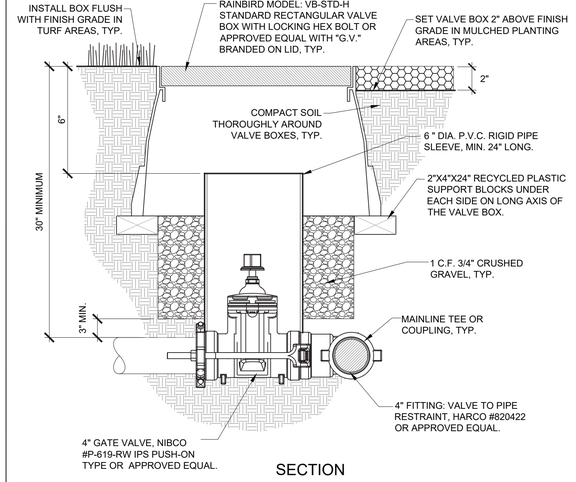

SECTION

J5 | 4" MAINLINE ISOLATION VALVE

N.T.S. | BOE VERSION May/17 - RF/gm | RP DETAIL L1101

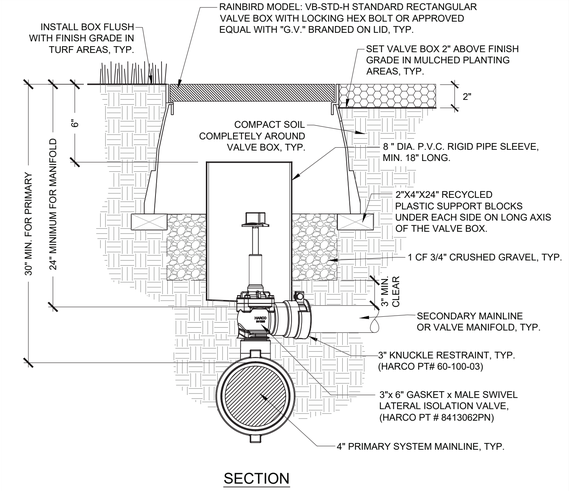

SECTION

J9 | MANIFOLD GATE VALVE, 3" and Larger Mainline

N.T.S. | BOE VERSION 02/14/18 - RF | RP DETAIL L1102

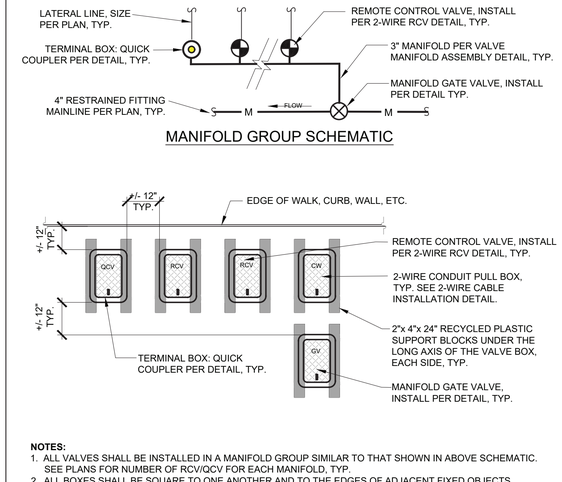

MANIFOLD GROUP SCHEMATIC

NOTES:
1. ALL VALVES SHALL BE INSTALLED IN A MANIFOLD GROUP SIMILAR TO THAT SHOWN IN ABOVE SCHEMATIC. SEE PLANS FOR NUMBER OF RCV/QCV FOR EACH MANIFOLD, TYP.
2. ALL BOXES SHALL BE SQUARE TO ONE ANOTHER AND TO THE EDGES OF ADJACENT FIXED OBJECTS WHERE PRESENT.

J13 | VALVE BOX PLACEMENT

N.T.S. | | RP DETAIL 1410

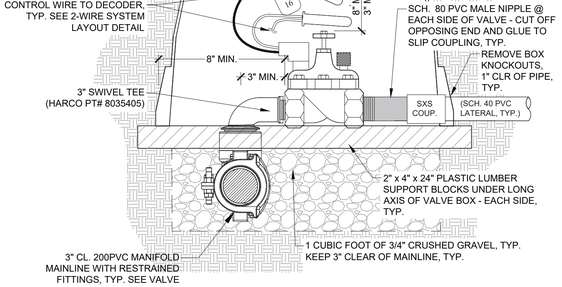

NOTES:
1. SEE APPLICABLE DETAILS FOR 2-WIRE DECODER AND CABLE INSTALLATION

8/9/18 GM

E1 | RCV INSTALLATION DETAIL, 2-WIRE SYSTEM

N.T.S. | | RP DETAIL 1402

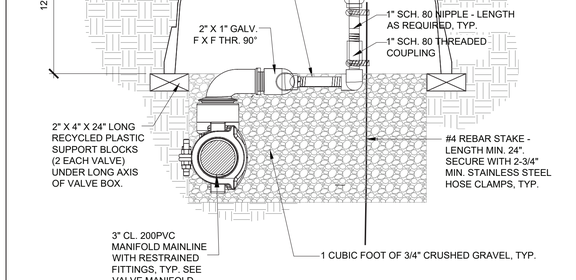

NOTES:
1) SEE DETAIL J1/1604 FOR MANIFOLD PIPE & FITTINGS.

VERSION 05/16/17 RWF/gm

E5 | QUICK COUPLING VALVE INSTALLATION DETAIL

N.T.S. | | RP DETAIL L1201

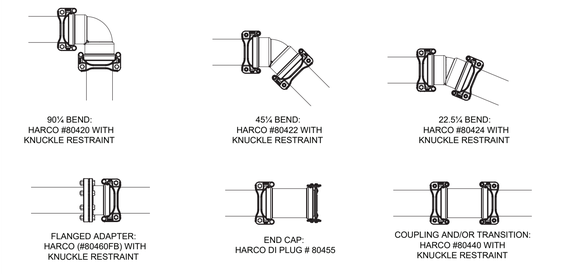

NOTE: ADDITIONAL PIPE & FITTING CONFIGURATIONS MAY BE NECESSARY TO COMPLETE WORK SHOWN ON PLANS DUE TO UNFORSEEN SITE CONDITIONS. CONSULT MANUFACTURER FOR ADDITIONAL INFORMATION. USE #60-100-03 KNUCKLE RESTRAINT ON FITTINGS WHERE DESIGNATED.

E9 | RESTRAINED FITTINGS FOR 4" MAINLINE

N.T.S. | BOE VERSION 02/14/18 - RF | RP DETAIL L1313

MAINLINE PIPE FITTINGS:

1.) DUCTILE IRON FITTINGS WILL BE REQUIRED FOR ALL MAINLINE FITTINGS (CONSTANT PRESSURE) FOR 3" OR LARGER PIPE UNDER THE FOLLOWING CONDITIONS:

A. AS SHOWN ON OTHER DETAILS INCLUDED WITHIN IN THESE PLANS AND SPECIFICATIONS.

B. AT ALL DIRECTIONAL FITTINGS SUCH AS TEES, ELBOWS, ETC., AND REDUCERS, ADAPTERS AND COUPLINGS AS NOTED OR DETAILED.

2.) DUCTILE IRON FITTINGS SHALL BE A "PUSH-ON" TYPE FOR IPS SIZED PVC PIPE BY HARCO FITTINGS (www.harcofittings.com) OR APPROVED EQUAL.

3.) ALL GASKETED PVC PIPE JOINTS WITHIN 25' OF DUCTILE IRON DIRECTIONAL FITTINGS SHALL BE RESTRAINED USING PIPE TO PIPE RESTRAINTS SHOWN. FOR END CAPS AND TERMINAL GATE VALVES, ALL GASKETED PVC PIPE JOINTS WITHIN 40' SHALL BE RESTRAINED USING PIPE TO PIPE RESTRAINT SHOWN. REFER TO MANUFACTURERS FITTING RESTRAINT GUIDE FOR ADDITIONAL INFORMATION.

4.) ALL BOLTS ON FITTING RESTRAINTS SHALL BE TIGHTENED USING A TORQUE WRENCH ONLY FOLLOWING THE MANUFACTURER'S SPECIFICATIONS. THE CONTRACTOR SHALL BE PREPARED TO VERIFY THE TORQUE OF THE BOLTS WITH A TORQUE WRENCH IN THE PRESENCE OF THE BCA INSPECTOR AND SHALL HAVE A TORQUE WRENCH AVAILABLE ON SITE UNTIL JOB ACCEPTANCE.

5.) GLUED JOINTS SHALL NOT BE USED IN ANY MAINLINE PVC FITTINGS OR PIPE 3" OR LARGER IN DIAMETER UNLESS SPECIFICALLY DENOTED ON PLANS OR DETAILS INCLUDED IN THIS DRAWING SET.

6.) THRUST BLOCKS SHALL ONLY BE USED FOR MAINLINE FITTINGS WHERE SPECIFICALLY DESIGNATED IN PLANS OR DETAILS.

NOTE:
1. PIPE AND CONTROL WIRE CROSSING UNDER PAVING OR WALKWAY OVER 8' WIDE SHALL BE SLEEVED AS INDICATED ABOVE.
2. PIPE BEDDING AND BACKFILL SHALL BE PER APPROVED SOILS REPORT AND LANDSCAPE CONSTRUCTION NOTES, PIPELINE INSTALLATION GENERAL.

A1 | IRRIGATION TRENCHING DETAIL - 2 WIRE

N.T.S. | BOE VERSION 02/08/18 | RP DETAIL 1350

NOTES:
1. PLACE ALL HEADS 1/4" ABOVE FINISH GRADE AT INITIAL INSTALLATION. SET HEADS 3" AWAY FROM WALKS, CURBS, OR MOW STRIPS.
2. INSTALL ALL HEADS PERPENDICULAR TO FINISH GRADE.
3. THOROUGHLY FLUSH ALL LATERAL LINE PIPES TO REMOVE DIRT AND DEBRIS BEFORE INSTALLATION OF NOZZLES.
4. ADJUST ALL HEADS TO PROPER ARC AND RADIUS AS NECESSARY TO ACHIEVE PROPER COVERAGE AND UNIFORMITY. IF PROPER COVERAGE AND UNIFORMITY IS NOT ACHIEVED WITH THE SPECIFIED NOZZLE, CONTRACTOR SHALL CHANGE NOZZLE AS NEEDED IN CONSULTATION WITH LANDSCAPE ARCHITECT UNTIL DESIRED PERFORMANCE IS ACHIEVED.

REVISED: 6/14/06 RWF/SLG

A5 | GEAR-DRIVEN ROTOR HEAD INSTALLATION

N.T.S. | | RP DETAIL 162

NOTES:
1. PLACE ALL HEADS 1/4" ABOVE FINISH GRADE AT INITIAL INSTALLATION. SET HEADS 3" AWAY FROM WALKS, CURBS, OR MOW STRIPS.
2. INSTALL ALL HEADS PERPENDICULAR TO FINISH GRADE.
3. THOROUGHLY FLUSH ALL LATERAL LINE PIPES TO REMOVE DIRT AND DEBRIS BEFORE INSTALLATION OF NOZZLES.
4. ADJUST ALL HEADS TO PROPER ARC AND RADIUS AS NECESSARY TO ACHIEVE PROPER COVERAGE AND UNIFORMITY. IF PROPER COVERAGE AND UNIFORMITY IS NOT ACHIEVED WITH THE SPECIFIED NOZZLE, CONTRACTOR SHALL CHANGE NOZZLE AS NEEDED UNTIL DESIRED PERFORMANCE IS ACHIEVED.

REVISED: 6/14/06 RWF/SLG

A9 | POP-UP SPRAY HEAD INSTALLATION

N.T.S. | | RP DETAIL 162

BUREAU OF ENGINEERING
OFFICIAL RECORD

A13 | ROOT WATERING SYSTEM BUBBLER ASSEMBLY

N.T.S. | BOE VERSION Sep/07 - RF | RAP DETAIL L1660

THE CITY OF LOS ANGELES OR ITS OFFICERS OR AGENTS SHALL NOT BE RESPONSIBLE FOR THE ACCURACY OR COMPLETENESS OF ELECTRONIC COPIES OF THIS PLAN SHEET.

REVISION DATES (DESIGN STAGE ONLY)

TEMPLATE SHEET REVISION DATE: 08/2014
REVISION DATE: 6/24/2019 9:32 AM FILE: Q:\IN-HOUSE-DESIGN\STUDIO CITY GYMNASIUM (RL)\18_DESIGN\LANDSCAPE\WORKING CD\SCRC-IRRIGATION_DETAILS_L604-607.DWG

BUREAU OF ENGINEERING
ENGINEERING
CITY OF LOS ANGELES

NO.	REVISIONS:	DATE:	BY:
1			
2			
3			
4			
5			

BUILDING NO.

INDEX NO. - RP-300106

LICENSED LANDSCAPE ARCHITECT ★ FINISH GRADE ★ No. 3060 Signature Renewal Date 04-30-19 ★ STATE OF CALIFORNIA

CITY OF LOS ANGELES DEPARTMENT OF PUBLIC WORKS

CITY ENGINEER

		DATE:
ARCHITECTURAL DIVISION		
TED ALLEN, PE		04/30/19
ARCHITECT:	RICHARD W. FISHER LIC. NO. 3060	04/30/19
DESIGNED BY:	RICHARD W. FISHER	04/30/19
DRAWN BY:	GREG MOESER	04/30/19
CHECKED BY:	JANE ADRIAN	04/30/19
APPROVED BY:	MAHMOOD KARIMZADEH, A.I.A., DEPUTY CITY ENGINEER	04/30/19

CLIENT: DEPARTMENT OF RECREATION AND PARKS
GENERAL MANAGER: MICHAEL A. SHULL

SHEET TITLE: IRRIGATION DETAILS SHEET 1

PROJECT: STUDIO CITY GYMNASIUM

ADDRESS: 12621 RYE STREET STUDIO CITY, CA 91604

WORK ORDER NO. E170267B

PLAN FILE NO.

DRAWING NO. L604

SHEET 204 OF SHEETS 211

PLOTTED: 6/24/2019 4:13 PM

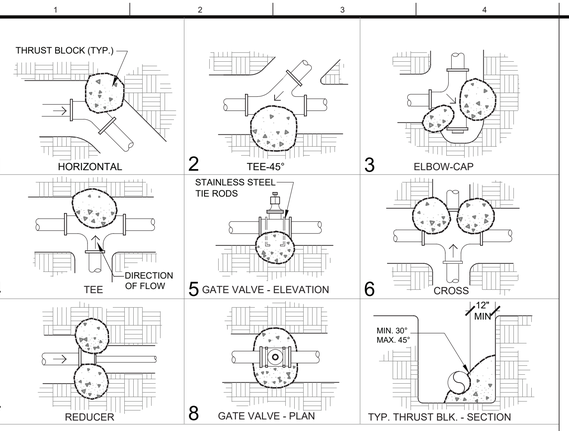

1. PLASTIC PIPE SHALL BE INSTALLED PER IRRIGATION INSTALLATION NOTES AND TRENCHING DETAIL.
2. THE PORTLAND CEMENT CONCRETE USED FOR THRUST BLOCKS SHALL BE MIN. 470-B-2000 CONC.
3. ALL ANCHOR RODS SHALL BE GALVANIZED STEEL MIN. 1/2" INCH IN DIAMETER.
4. SIZE OF THRUST BLK.: 4" PIPE = 4 CU. FT. CONC., 6" PIPE = 6 CU. FT., 8" PIPE = 8 CU. FT.
5. WRAP ALL FITTINGS WITH SIX MIL PLASTIC BEFORE POURING THRUST BLOCKS.
6. POOR SOIL CONDITIONS : USE THRUST BLOCKS FOR 3" PIPE AT SIZE SHOWN FOR 4" PIPE.
7. ALL THRUST BLOCKS SHALL BEAR AGAINST UNDISTURBED SOIL.

RAP VERSION 3/1/92 RCM, JPH

J1	THRUST BLOCK INSTALLATION	
N.T.S.	BOE VERSION Sep/07	RP DETAIL L1340

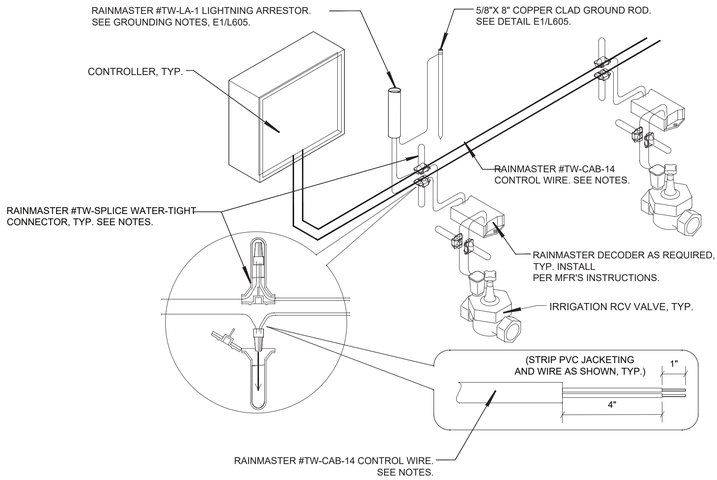

WIRING NOTES:

1. CONTROL WIRE SHALL BE RAINMASTER #TW-CAB-14 OR APPROVED EQUAL: POLYETHYLENE DOUBLE-JACKETED OR UF-B UL PVC DOUBLE- JACKETED TWO-CONDUCTOR SOLID CORE DESIGNED FOR DIRECT BURIAL WITH INSULATION 3/16 INCH (.060") THICK, HIGH DENSITY, SUNLIGHT RESISTANT INCASED IN AN OUTER JACKET OF POLYETHYLENE OR PVC CONFORMING TO ICEA S-GL-402 OR NEMA WC5, HAVING A MINIMUM WALL THICKNESS OF .045 INCHES. (TWO-WIRE POLYETHYLENE "TWISTED" CABLE OR SINGLE STRAND 14-GAUGE PVC IRRIGATION WIRE DOES NOT CONFORM TO THESE SPECIFICATIONS AND WILL NOT BE ACCEPTED).
2. ALL WIRE INSULATION SHALL BE INTACT AND FREE OF NICKS AND CUTS.
3. ALL 2-WIRE CABLE SHALL BE INSTALLED IN 1" MIN. SCH. 80 PVC CONDUIT, 24" MIN. BELOW GRADE W/PULL BOXES AT 150' MAX.
4. ATTACHING DECODERS:
   - TWIST WIRES TO PROVIDE A SOLID MECHANICAL CONNECTION BEFORE SECURING THE ATTACHMENT BY ADDING THE WIRE NUT.
   - RAINMASTER #TW-SPLICE-14 OR APPROVED EQUAL (SURESPLICE, TRADEMARKED) GEL FILLED CONNECTORS (OR SIMILAR) SHALL BE USED ON ALL CONNECTIONS.
   - GREASE FILLED WIRE NUTS WILL NOT BE ACCEPTED.
   - TEST ALL CONNECTIONS BEFORE IMMERSING THE WIRE NUT IN THE GEL-FILLED CAP.
   - ADHERE TO ALL LOCAL AND NATIONAL BUILDING AND ELECTRICAL CODES.
   - CONTRACTOR SHALL GUARANTEE ALL WIRE CONNECTIONS TO BE ABSOLUTELY WATER TIGHT.
5. ALL EQUIPMENT SHALL BE INSTALLED PER THE MANUFACTURER'S SPECIFICATIONS.

J9	2-WIRE IRRIGATION SYSTEM WIRING
N.T.S.	

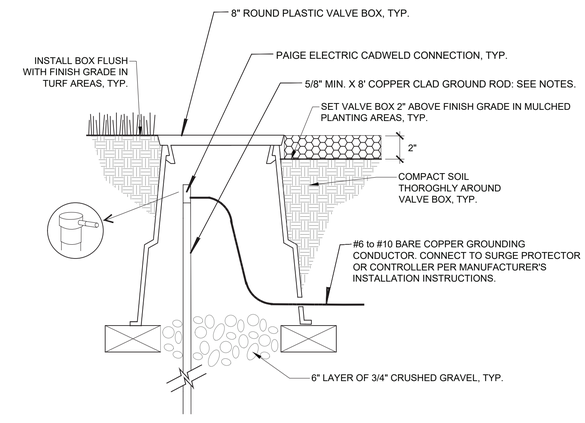

TWO-WIRE SYSTEM GROUNDING REQUIREMENTS:

SURGE PROTECTION USING PROPER GROUNDING RODS AND RAINMASTER LIGHTNING ARRESTORS (TW-LA-1) IS REQUIRED FOR PROTECTION AGAINST SURGE DAMAGE DUE TO LIGHTNING OR OTHER ELECTRICAL SURGE EVENTS. CONFORMANCE TO THIS SURGE SUPPRESSION SPECIFICATION IS NECESSARY TO RETAIN WARRANTY PROTECTION UNDER RAINBIRD WARRANTY TERMS.

THE INSTALLATION SHALL CONFORM TO MANUFACTURER'S INSTRUCTIONS, AND MUST MEET OR EXCEED THE AMERICAN SOCIETY OF IRRIGATION CONSULTANTS (ASIC) EARTH GROUNDING GUIDELINE 100-2002.
HTTP://WWW.ASIC.ORG/UPLOADS/ASSETS/011007_121320_ASIC_GROUNDING_GUIDELINES.DOC

GROUND RODS AS REFERRED TO IN THIS SPECIFICATION SHALL CONFORM TO THE FOLLOWING STANDARDS:

1.) ALL GROUNDING RODS SHALL BE BARE COPPER OF 5/8" DIAMETER OR GREATER, AND 8' LENGTH OR GREATER.
2.) A MEASURED RESISTANCE READING OF LESS THAN 10 OHMS IS NECESSARY AT EACH LSP-1 (OR DECODER WHERE SURGE PROTECTION IS BUILT INTO THE DECODER). ASIC SPEC: SECTION 7.0 - MEASURING RESISTANCE, ITEM A.

GROUND RODS SHALL BE LOCATED AT A MINIMUM DISTANCE TO ASSURE THAT THE TWO-WIRE PATH IS OUTSIDE OF THE ELECTRODE SPHERE OF INFLUENCE FOR THE GROUNDING ROD: THE GROUND ROD MUST BE CONNECTED AT LEAST 8' AWAY FROM THE TWO-WIRE PATH, AT A RIGHT ANGLE TO THE TWO-WIRE PATH.

UNDER NO CIRCUMSTANCES SHOULD A GROUND ROD BE INSTALLED IN OR UNDER A VALVE BOX, METER BOX OR ELECTRICAL BOX.

CONNECTIONS TO GROUNDING RODS
ALL CONNECTIONS TO GROUND RODS SHALL CONFORM TO ASIC EARTH GROUNDING GUIDELINE 100-2002, AND SHALL CONSIST OF EITHER A CADWELD TYPE OR SCREW CLAMP TYPE OF CONNECTION. CADWELD OR EQUIVALENT CONNECTIONS ARE PREFERRED.

ANY WIRE EXTENSIONS REQUIRED TO CONNECT FROM A GROUND ROD TO A SURGE PROTECTOR OR ENCLOSURE GROUND LUG SHALL BE BARE COPPER, AND SHALL NOT HAVE ANY SHARP BENDS OR KINKS. WIRE EXTENSIONS CONNECTED TO SURGE PROTECTORS SHALL USE A CADWELD TYPE OR SCREW CLAMP TYPE CONNECTION WHERE THE BARE COPPER GROUND WIRE MEETS THE GREEN GROUNDING WIRE FROM THE SURGE PROTECTOR.

E1	2-WIRE SYSTEM GROUNDING ROD
N.T.S.	

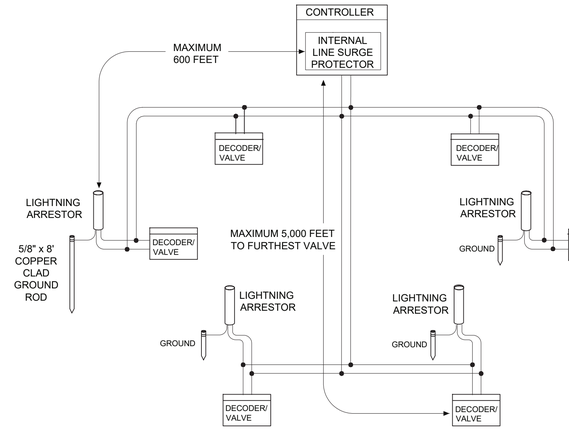

NOTES:

1. 2-WIRE SYSTEM LAYOUT AND LIGHTNING ARRESTOR/GROUNDING ROD LOCATIONS SHALL BE APPROVED BY THE MANUFACTURER'S REPRESENTATIVE PRIOR TO COMPLETION OF INSTALLTION.
2. 2-WIRE PATH MAY BE LOOPED OR A BRANCHING SINGLE PATH AS SHOWN PER IRRIGATION PLAN.

WIRE CONFIGURATION		
WIRE GAUGE	Total WireLength (feet) (loop)	Max Distance to furthest valve
TW-CAB-14	10,000	5,000
Maximum 600 feet between lightning arrestors		

E9	2-WIRE SYSTEM LAYOUT	
N.T.S.	B.O.E. 02/16/18	L1372

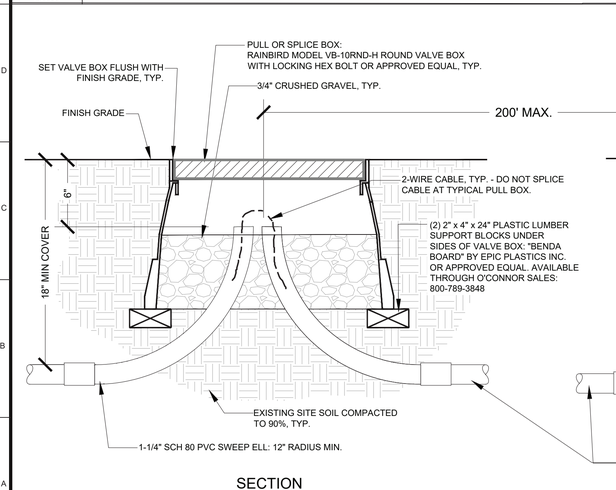

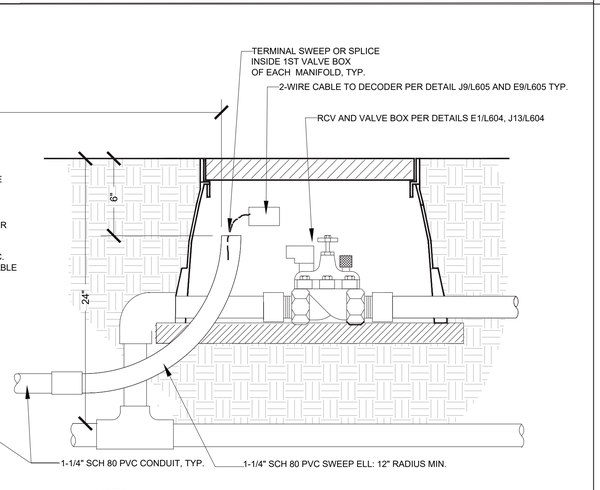

SECTION

NOTES:
1. ALL CONDUIT AND FITTINGS SHALL BE SCHEDULE 80 PVC. CHANGES IN DIRECTION OF CONDUIT PATH SHALL NOT EXCEED 360° FOR EACH SECTION BETWEEN PULL BOXES.
2. MAXIMUM DISTANCE BETWEEN PULL BOXES SHALL BE 200 FEET.

A1	2-WIRE CONDUIT INSTALLATION	
N.T.S.		

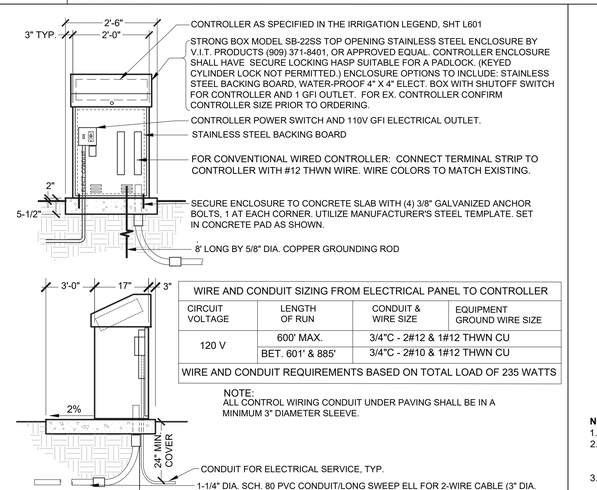

WIRE AND CONDUIT SIZING FROM ELECTRICAL PANEL TO CONTROLLER			
CIRCUIT VOLTAGE	LENGTH OF RUN	CONDUIT & WIRE SIZE	EQUIPMENT GROUND WIRE SIZE
120 V	600' MAX.	3/4"C - 2#12 & 1#12 THWN CU	
	BET. 601' & 885'	3/4"C - 2#10 & 1#12 THWN CU	
WIRE AND CONDUIT REQUIREMENTS BASED ON TOTAL LOAD OF 235 WATTS			

NOTE:
ALL CONTROL WIRING CONDUIT UNDER PAVING SHALL BE IN A MINIMUM 3" DIAMETER SLEEVE.

A9	CONTROLLER AND ENCLOSURE	
N.T.S.	BOE VERSION JAN/07	RP DETAIL 1472

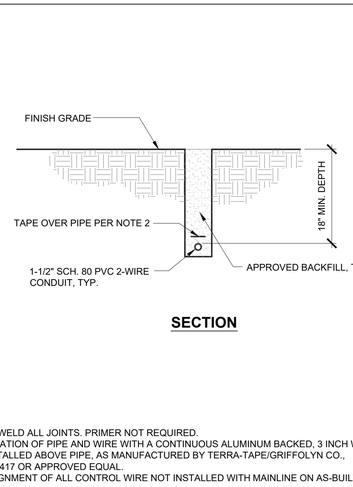

SECTION

NOTES:
1. SOLVENT WELD ALL JOINTS. PRIMER NOT REQUIRED.
2. MARK LOCATION OF PIPE AND WIRE WITH A CONTINUOUS ALUMINUM BACKED, 3 INCH WIDE RED, UNLABELED TAPE, INSTALLED ABOVE PIPE, AS MANUFACTURED BY TERRA-TAPE/GRIFFOLYN CO., (800) 231-2417 OR APPROVED EQUAL.
3. SHOW ALIGNMENT OF ALL CONTROL WIRE NOT INSTALLED WITH MAINLINE ON AS-BUILT DRAWINGS.

RP VERSION 02/01/18 RWF

A13	CONTROL WIRE WITHOUT MAINLINE, 2-WIRE SYSTEM	
N.T.S.	BOE VERSION Jan/07	RP DETAIL L1422

BUREAU OF ENGINEERING
OFFICIAL RECORD

ENGINEERING
CITY OF LOS ANGELES

BUREAU OF ENGINEERING

NO.	REVISIONS:	DATE:	BY:

BUILDING NO.

INDEX NO. - RP-300106

LANDSCAPE ARCHITECT
No. 3060
Signature
Expires 08-31-19
Revised Date
04-30-19
LICENSED
STATE OF CALIFORNIA

CITY OF LOS ANGELES DEPARTMENT OF PUBLIC WORKS

CLIENT: DEPARTMENT OF RECREATION AND PARKS
GENERAL MANAGER: MICHAEL A. SHULL

SHEET TITLE: IRRIGATION DETAILS SHEET 2

PROJECT: STUDIO CITY GYMNASIUM

ADDRESS: 12621 RYE STREET STUDIO CITY, CA. 91604

CITY ENGINEER
TED ALLEN, PE

ARCHITECTURAL DIVISION

		LIC. NO. 3060	DATE:
ARCHITECT:	RICHARD W. FISHER		04/30/19
DESIGNED BY:	RICHARD W. FISHER		04/30/19
DRAWN BY:	GREG MOESER		04/30/19
CHECKED BY:	JANE ADRIAN		04/30/19
APPROVED BY:	MAHMOOD KARIMZADEH, A.I.A. DEPUTY CITY ENGINEER		

WORK ORDER NO.
E170267B

PLAN FILE NO.

DRAWING NO.
L605
SHEET 205 OF SHEETS 211

PLOTTED: 6/24/2019 4:14 PM

THE CITY OF LOS ANGELES OR ITS OFFICERS OR AGENTS SHALL NOT BE RESPONSIBLE FOR THE ACCURACY OR COMPLETENESS OF ELECTRONIC COPIES OF THIS PLAN SHEET.

REVISION DATES (DESIGN STAGE ONLY)

TEMPLATE SHEET REVISION DATE: 08/2014
REVISION DATE: 6/24/2019 9:32 AM
FILE: Q:\IN-HOUSE-DESIGN\STUDIO CITY GYMNASIUM (RL)\18_DESIGN\LANDSCAPE\WORKING CDS\SCRC-IRRIGATION_DETAILS_L604-L607.DWG

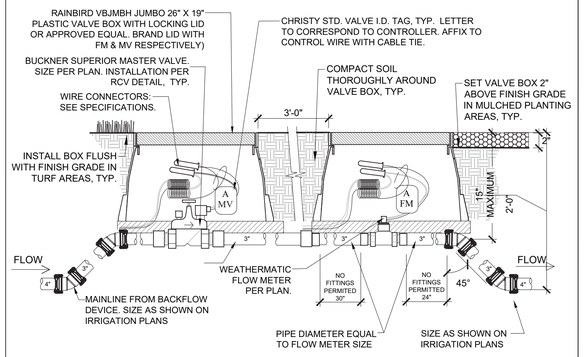

NOTES:
1. CONNECT FLOW METER LEADS TO SMARTLINK AIRCARD (CONTROLLER "A") PER MANUFACTURER'S INSTRUCTIONS.
2. CONNECT MASTER VALVE LEADS TO CONTROLLER "A" PER MANUFACTURER'S INSTRUCTIONS.
3. ALSO SEE DETAIL A5/THIS SHEET FOR FLOW SENSING MASTER VALVE - TWO WIRE (FOR CONTROLLER "B").

J5	FLOW SENSOR AND MASTER VALVE (SEPARATE)	
N.T.S.		RP DETAIL L1510

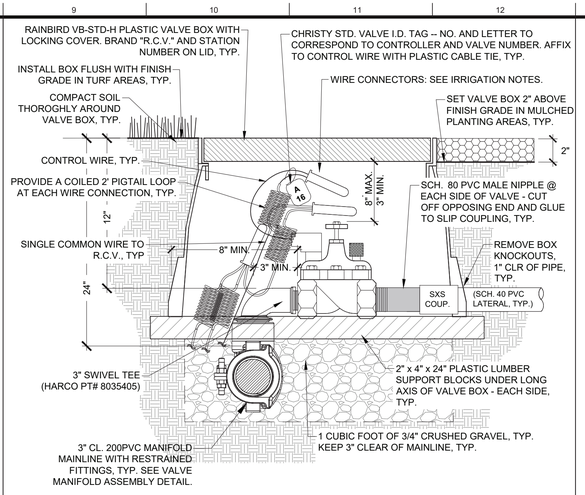

NOTES:
1. ALSO SEE DETAIL E1/L604 FOR RCV INSTALLATION DETAIL WITH 2-WIRE.

J9	RCV INSTALLATION - CONVENTIONAL WIRING (NON-2WIRE)	
N.T.S.		

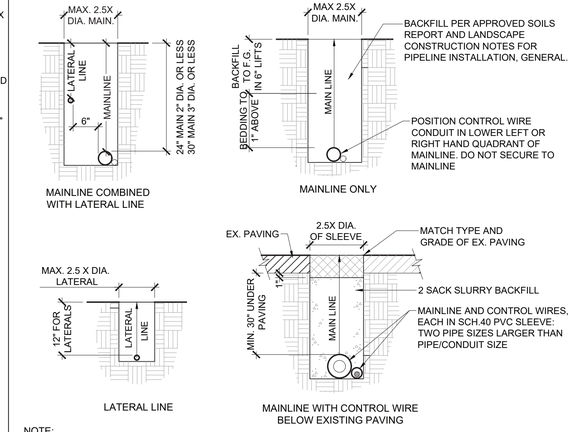

NOTE:
1. PIPE AND CONTROL WIRE CROSSING UNDER PAVING OR WALKWAY OVER 8' WIDE SHALL BE SLEEVED AS INDICATED ABOVE.
2. PIPE BEDDING AND BACKFILL SHALL BE PER APPROVED SOILS REPORT AND LANDSCAPE CONSTRUCTION NOTES, PIPELINE INSTALLATION GENERAL.
3. ALSO REFER TO DETAILS A1/L604 AND DETAIL A13/L605 FOR TRENCHING WITH 2-WIRE.

J13	IRRIGATION TRENCHING, CONVENTIONAL WIRING (NON-2-WIRE)	
N.T.S.	BOE VERSION JUN/18	RP DETAIL 1350

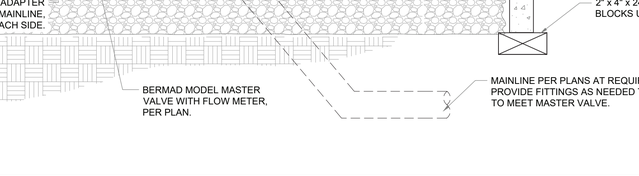

NOTE: ADDITIONAL PIPE & FITTING CONFIGURATIONS MAY BE NECESSARY TO COMPLETE WORK SHOWN ON PLANS DUE TO UNFORSEEN SITE CONDITIONS. CONSULT MANUFACTURER FOR ADDITIONAL INFORMATION. USE #60-100-03 KNUCKLE RESTRAINT ON FITTINGS WHERE DESIGNATED.

SEE DETAIL E9/L604 FOR RESTRAINED FITTINGS FOR 4" MAINLINE.

MAINLINE PIPE FITTINGS:

1.) DUCTILE IRON FITTINGS WILL BE REQUIRED FOR ALL MAINLINE PIPE CONNECTIONS (CONSTANT PRESSURE) FOR 3" OR LARGER PIPE UNDER THE FOLLOWING CONDITIONS:

A. AS SHOWN ON OTHER DETAILS INCLUDED WITHIN IN THESE PLANS AND SPECIFICATIONS.

B. AT ALL DIRECTIONAL FITTINGS SUCH AS TEES, ELBOWS, ETC., AND REDUCERS, ADAPTERS AND COUPLINGS AS NOTED OR DETAILED.

2.) DUCTILE IRON FITTINGS SHALL BE A "PUSH-ON" TYPE FOR IPS SIZED PVC PIPE BY HARCO FITTINGS (www.harcofittings.com) OR APPROVED EQUAL.

3.) ALL GASKETED PVC PIPE JOINTS WITHIN 25' OF DUCTILE IRON DIRECTIONAL FITTINGS SHALL BE RESTRAINED USING PIPE TO PIPE RESTRAINT SHOWN. FOR END CAPS AND TERMINAL GATE VALVES, ALL GASKETED PVC PIPE JOINTS WITHIN 40' SHALL BE RESTRAINED USING PIPE TO PIPE RESTRAINT SHOWN. REFER TO MANUFACTURERS FITTING RESTRAINT GUIDE FOR ADDITIONAL INFORMATION.

4.) ALL BOLTS ON FITTING RESTRAINTS SHALL BE TIGHTENED USING A TORQUE WRENCH ONLY FOLLOWING THE MANUFACTURER'S SPECIFICATIONS. THE CONTRACTOR SHALL BE PREPARED TO VERIFY THE TORQUE OF THE BOLTS WITH A TORQUE WRENCH IN THE PRESENCE OF THE BCA INSPECTOR AND SHALL HAVE A TORQUE WRENCH AVAILABLE ON SITE UNTIL JOB ACCEPTANCE.

5.) GLUED JOINTS **SHALL NOT BE** USED IN ANY MAINLINE PVC FITTINGS OR PIPE 3" OR LARGER IN DIAMETER UNLESS SPECIFICALLY DENOTED ON PLANS OR DETAILS INCLUDED IN THIS DRAWING SET.

6.) THRUST BLOCKS **SHALL ONLY BE** USED FOR MAINLINE FITTINGS WHERE SPECIFICALLY DESIGNATED IN PLANS OR DETAILS.

E9	RESTRAINED FITTINGS FOR 3" MAINLINE	
N.T.S.	BOE VERSION DEC/08 - RF	RP DETAIL 1312

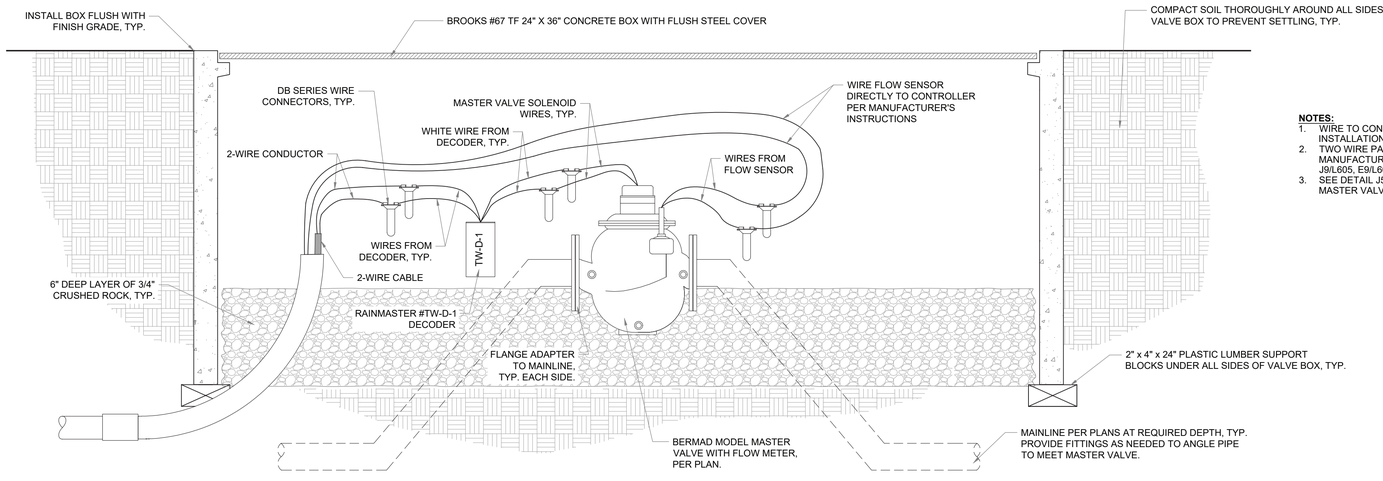

NOTES:
1. WIRE TO CONTROLLER "B". REFER TO CONTROLLER INSTALLATION AND OPERATION MANUAL FOR INSTRUCTIONS.
2. TWO WIRE PATH SHALL BE GROUNDED PER THE MANUFACTURER'S INSTRUCTIONS AND DETAILS E1/L605, J9/L605, E9/L605.
3. SEE DETAIL J5/THIS SHEET FOR SEPARATE FLOW SENSOR AND MASTER VALVE (CONNECTED TO CONTROLLER "A").

A5	FLOW-SENSING MASTER VALVE - TWO-WIRE	
N.T.S.		

BUREAU OF ENGINEERING
OFFICIAL RECORD

THE CITY OF LOS ANGELES OR ITS OFFICERS OR AGENTS SHALL NOT BE RESPONSIBLE FOR THE ACCURACY OR COMPLETENESS OF ELECTRONIC COPIES OF THIS PLAN SHEET.

REVISION DATES (DESIGN STAGE ONLY)

TEMPLATE SHEET REVISION DATE: 08/2014
REVISION DATE: 6/24/2019 9:32 AM
FILE: Q:\IN-HOUSE-DESIGN\STUDIO CITY GYMNASIUM (RL)\18_DESIGN\LANDSCAPE\WORKING CDS\SCRC-IRRIGATION_DETAILS_L604-L607.DWG

BUREAU OF ENGINEERING
CITY OF LOS ANGELES

NO.	REVISIONS:	DATE:	BY:

BUILDING NO.

INDEX NO. - RP-300106

LANDSCAPE ARCHITECT ★ LICENSED ★ STATE OF CALIFORNIA
No. 3060
Signature
Renewal Date
04-30-19

DEPARTMENT OF PUBLIC WORKS
CITY OF LOS ANGELES

CITY ENGINEER

	DATE:
TED ALLEN, PE	04/30/19
ARCHITECTURAL DIVISION	04/30/19
ARCHITECT: RICHARD W. FISHER LIC. NO. 3060	04/30/19
DESIGNED BY: RICHARD W. FISHER	04/30/19
DRAWN BY: GREG MOESER	
CHECKED BY: JANE ADRIAN	
APPROVED BY: MAHMOOD KARIMZADEH, A.I.A. DEPUTY CITY ENGINEER	

CLIENT: DEPARTMENT OF RECREATION AND PARKS
GENERAL MANAGER: MICHAEL A. SHULL

SHEET TITLE: IRRIGATION DETAILS SHEET 3

PROJECT: STUDIO CITY GYMNASIUM

ADDRESS: 12621 RYE STREET STUDIO CITY, CA 91604

WORK ORDER NO. E170267B

PLAN FILE NO.

DRAWING NO. L606

SHEET 206 OF SHEETS 211

PLOTTED: 6/24/2019 4:14 PM

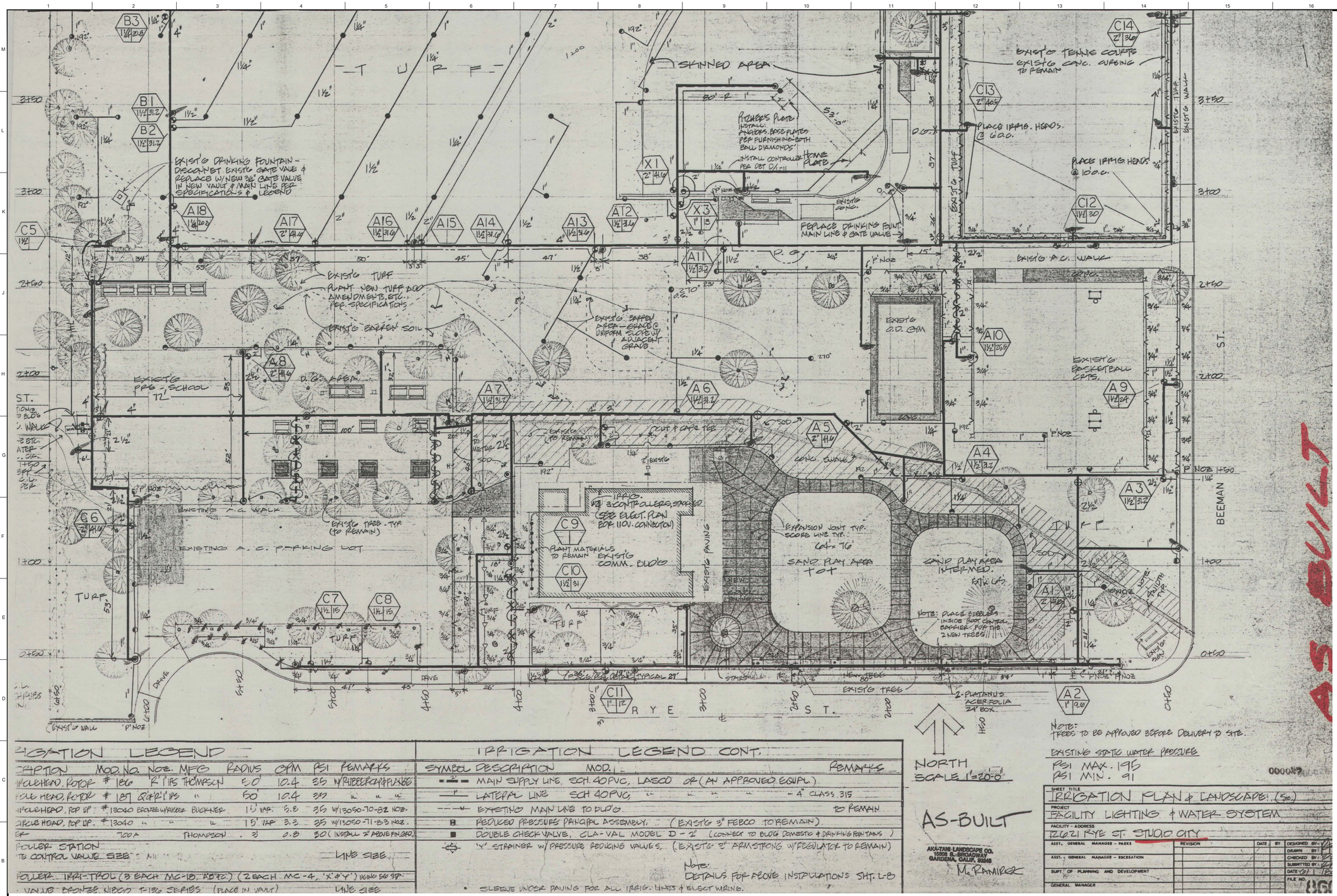

IRRIGATION LEGEND

SYMBOL	DESCRIPTION	MOD. NO.	REMARKS
	1" PVC SCH. 40		
	1" PVC SCH. 40		
	1" PVC SCH. 40		

THE CITY OF LOS ANGELES OR ITS OFFICERS OR AGENTS SHALL NOT BE RESPONSIBLE FOR THE ACCURACY OR COMPLETENESS OF ELECTRONIC COPIES OF THIS PLAN SHEET.

TEMPLATE SHEET REVISION DATE: 08/2014
REVISION DATE: 6/24/2019 9:32 AM FILE: Q:\IN-HOUSE-DESIGNS\STUDIO CITY GYMNASIUM (RJ\18_DESIGN\LANDSCAPEWORKING CD\SCRC-IRRIGATION_DETAILS_L604-L607.DWG

REVISION DATES (DESIGN STAGE ONLY)

MILBANK ST.

EXIST'G SIDEWALK W/ PERIMETER C.L. FENCING

EXIST'G CONC. PAVING

EXIST'G DRINKING FOUNTAIN

EXIST'G BALL DIAMOND

SKINNED AREA

SAWCUT CONC. PAVING AS REQ. INSTALL 4 STA. 'Y' CONTROLLER IN PEDESTAL MOUNTED BOX PER DETAIL 2/L-11 PLACE 2.C.C. 0' OUT FROM FENCE

EXIST'G TURF

EXIST'G BALL DIAMOND SKINNED AREA

EXIST'G TURF

EXIST'G CONC. WALK W/ CONC. HEADER

EXIST'G TENNIS COURTS

LOCATE 2.C.C. FENCE POST. STUB UP 2.C.C. ON SWEL RISER EXTEND THRU C.L. FENCE @ RIGHT ANGEL TO COURT AND SECURE W/ STAINLESS STEEL BAND TO FENCE POST. (TYPICAL IN TENNIS COURT AREAS).

PLACE IRRIG HEADS @ 100.C.C. TYP.

BEEMAN ST.

NORTH SCALE 1"=20'-0"

JOB: STUDIO CITY RECREATION CENTER

SOD PLANTING

THE SOD SHALL BE A PERENNIAL RYEGRASS, KENTUCKY BLUE GRASS MIX SUCH AS PENN-BLUE BY CAL TURF (805) 485-9694 OR RYE-CLUE BY SOUTHLAND SOD FARM. THE SOD SHALL BE MACHINE CUT TO BETWEEN ½" AND ⅝" THICK NOT INCLUDING TOP GROWTH OR THATCH. SOIL PREP THE UNDERLYING SOIL WITH 3 CU. YDS. OF TYPE I SOIL AMENDMENT PER 1,000 SQ.FT. AND FERTILIZE WITH 15 LBS. OF 6-10-4 FERTILIZER PER 1,000 SQ.FT. MIX ALL AMENDMENTS THOROUGHLY INTO THE TOP 6 INCHES OF THE SOIL. PREPARE THE UNDERLYING SOIL OF THE SOD AS DIRECTED FOR FINISH GRADE FOR LAWNS. IN THE NOTICE TO CONTRACTORS. HALF LAP ALL ENDS OF SOD AND FULLY ROLL ALL SOD WITH A WATER BALLAST ROLLER AREA TO BE SODDED ±12,700 SQ.FT. CONTRACTOR TO VERIFY.

GATE VALVES SHALL BE PLACED IN VALVE BOXES PER NOTICE TO CONTRACTORS - TYPICAL

SHEET TITLE: IRRIGATION PLAN (NORTH SECTION)
PROJECT: FACILITY LIGHTING & WATER SYSTEM
FACILITY - ADDRESS: 12621 RYE ST. STUDIO CITY

ASST. GENERAL MANAGER – PARKS	REVISION	DATE	BY
ASST. GENERAL MANAGER – RECREATION			
SUPT. OF PLANNING AND DEVELOPMENT			
GENERAL MANAGER			

DESIGNED BY:
DRAWN BY:
CHECKED BY:
SUBMITTED BY:
DATE: 6/1/19
FILE NO. 360

CITY OF LOS ANGELES
DEPARTMENT OF RECREATION AND PARKS
200 N. MAIN STREET, CITY HALL EAST, LOS ANGELES, CALIFORNIA 90012

SHEET L 7 OF 11 16 SHEETS

FOR INFORMATION ONLY

BUREAU OF ENGINEERING OFFICIAL RECORD

CITY OF LOS ANGELES DEPARTMENT OF PUBLIC WORKS
BUREAU OF ENGINEERING

ENGINEERING
CITY OF LOS ANGELES

NO.	REVISIONS:	DATE:	BY:

BUILDING NO.

INDEX NO. - RP-300106

LANDSCAPE ARCHITECT ★ FINIS ★ LICENSED
No. 3060
Signature
Date 5-15-19
Revised Date
04-30-19
STATE OF CALIFORNIA

CITY ENGINEER
TED ALLEN, PE
ARCHITECTURAL DIVISION

ARCHITECT:	RICHARD W. FISHER	LIC. NO. 3060	
DESIGNED BY:	RICHARD W. FISHER	DATE:	04/30/19
DRAWN BY:	GREG MCESER	DATE:	04/30/19
CHECKED BY:	JANE ADRIAN	DATE:	04/30/19
APPROVED BY:	MAHMOOD KARIMZADEH, A.I.A. DEPUTY CITY ENGINEER	DATE:	04/30/19

CLIENT: DEPARTMENT OF RECREATION AND PARKS
GENERAL MANAGER: MICHAEL A. SHULL

SHEET TITLE: IRRIGATION AS-BUILT RECORD DRAWINGS, SHEET 2
PROJECT: STUDIO CITY GYMNASIUM
ADDRESS: 12621 RYE STREET STUDIO CITY, CA 91604

WORK ORDER NO. E170267B
PLAN FILE NO.
DRAWING NO. L608
SHEET 208 OF SHEETS 211

PLOTTED: 6/24/2019 4:16 PM

SHRUB LEGEND

SYMBOL	BOTANICAL NAME	COMMON NAME	SIZE	QTY	WUCOLS	RIO COMPLIANT*	AREA*	REMARKS
Ap	ABUTILON PALMERI	INDIAN MALLOW	5 GAL.	12	LOW	WatershedWise	235 SF	5' O.C. PER DETAILS J1/L702 AND J5/L702
Ad	AGAVE DESMETTIANA 'VARIEGATA'	VARIEGATED SMOOTH AGAVE	5 GAL.	39	V. LOW	no	491 SF	4' O.C. PER DETAILS J1/L702 AND J5/L702
AB	AGAVE 'BLUE FLAME'	BLUE FLAME ALOE	5 GAL.	27	LOW	WatershedWise	353 SF	4' O.C. PER DETAILS J1/L702 AND J5/L702
A	ALOE 'MOONGLOW'	MOONGLOW ALOE	1 GAL.	107	LOW	no	456 SF	2.5' O.C. PER DETAILS J1/L702 AND J5/L702
BP	BACCHARIS PILULARIS 'PIGEON POINT'	DWARF COYOTE BRUSH	1 GAL.	100	LOW	WatershedWise	2,689 SF	6' O.C. PER DETAILS J1/L702 AND J5/L702
Be	BERBERIS PINNATA 'KEN HARTMAN'	SHINY LEAF MAHONIA	5 GAL.	33	LOW.	WatershedWise	934 SF	6' O.C. PER DETAILS J1/L702 AND J5/L702
Br	BERBERIS REPENS	CREEPING BARBERRY	1 GAL.	60	LOW	WatershedWise	323 SF	2.5' O.C. PER DETAILS J1/L702 AND J5/L702
Cd	CAREX DIVULSA	BERKELEY SEDGE	1 GAL.	102	LOW	no	456 SF	2' O.C. PER DETAILS J1/L702 AND J5/L702
Cs	CAREX SPISSA	SAN DIEGO SEDGE	1 GAL.	56	LOW	WatershedWise	417 SF	30" O.C. PER DETAILS J1/L702 AND J5/L702
C	CARISSA MACROCARPA 'BOXWOOD BEAUTY'	'BOXWOOD BEAUTY' CARISSA	1 GAL.	146	LOW	no	530 SF	24" O.C. PER DETAILS J1/L702 AND J5/L702
CG	CARISSA 'GREEN CARPET'	GREEN CARPET NATAL PLUM	1 GAL.	32	LOW	no	549 SF	5' O.C. PER DETAILS J1/L702 AND J5/L702
D	DASYLIRION WHEELERI	DESERT SPOON	5 GAL.	9	LOW	WatershedWise	71 SF	3' O.C. PER DETAILS J1/L702 AND J5/L702
Hp	HESPERALOE PARVIFLORA 'YELLOW'	YELLOW FLOWERING YUCCA	5 GAL.	4	LOW	WatershedWise	28 SF	3' O.C. PER DETAILS J1/L702 AND J5/L702
La	LANTANA 'NEW GOLD'	NEW GOLD LANTANA	1 GAL.	88	LOW	WatershedWise	2,292 SF	6' O.C. PER DETAILS J1/L702 AND J5/L702
Lf	LEUCOPHYLLUM FRUTESCENS 'GREEN CLOUD'	GREEN CLOUD LEUCOPHYLLUM	5 GAL.	22	LOW	WatershedWise	679 SF	6' O.C. PER DETAILS J1/L702 AND J5/L702
PX	PHILODENDRON 'XANADU'	XANADU CUT LEAF PHILODENDRON	1 GAL.	13	MOD.	no	163 SF	3.5' O.C. PER DETAILS J1/L702 AND J5/L702
S	SENECIO MANDRALISCAE	BLUE CHALK STICKS	1 GAL.	62	LOW	WatershedWise	284 SF	2.5' O.C. PER DETAILS J1/L702 AND J5/L702
Wf	WESTRINGIA FRUTICOSA 'MORNING LIGHT'	COAST ROSEMARY	5 GAL.	6	LOW	WatershedWise	88 SF	4' O.C. PER DETAILS J1/L702 AND J5/L702

*REFER TO L702 FOR RIO IMPROVEMENT OVERLAY DISTRICT COMPLIANCE DETAILS.

TREE LEGEND

SYMBOL	BOTANICAL NAME	COMMON NAME	SIZE	QTY	WUCOLS	RIO COMPLIANT*	AREA*	REMARKS
Ag	AFROCARPUS GRACILIOR STD.	AFRICAN FERN PINE	36" BOX	8	MOD.	WatershedWise	28 SF	STAKE PER DETAIL J1/L702
Cl	CHILOPSIS LINEARIS 'BUBBA' NAT.	DESERT WILLOW	36" BOX	14	LOW	WatershedWise	63 SF	STAKE PER DETAIL J1/L702
Gp	GEIJERA PARVIFLORA (LOW-BRANCHING NATURAL)	AUSTRALIAN WILLOW	36" BOX	8	LOW	WatershedWise	25 SF	STAKE PER DETAIL J1/L702
Pe	PINUS ELDARICA (LOW-BRANCHING NATURAL)	ELDARICA PINE	36" BOX	9	LOW	WatershedWise	29 SF	STAKE PER DETAIL J1/L702
Pi	PISTACIA X 'RED PUSH' STD.	RED PUSH PISTACHE	36" BOX	14	MOD.	WatershedWise	44 SF	STAKE PER DETAIL J1/L702
Qa	QUERCUS AGRIFOLIA (LOW-BRANCHING NATURAL)	COAST LIVE OAK	36" BOX	2	LOW	WatershedWise	6 SF	STAKE PER DETAIL J1/L702
Tt	TIPUANA TIPU STD.	TIPU TREE	36" BOX	8	LOW	WatershedWise	25 SF	STAKE PER DETAIL J1/L702

TURF AND GROUNDCOVER LEGEND

SYMBOL	DESCRIPTION	WUCOLS	RIO COMPLIANT*	AREA*	REMARKS
	'TIFWAY' BERMUDA SOD	HIGH	NA (SEE NOTES)	23,395 SF	SEE LANDSCAPE CONSTRUCTION NOTES.
	PHYLA NODIFLORA 'KURAPIA' @ 24" O.C. FROM PLUGS	LOW	NATIVE	6,046 SF	SEE LANDSCAPE CONSTRUCTION NOTES.

-----2----- HYDROZONE - REFER TO WATER EFFICIENT LANDSCAPE WORKSHEET, SHEET L702.

— — — LIMIT OF WORK

REFER TO L702 FOR PLANTING NOTES & GREEN BUILDING NOTES.

EXISTING TREES TO REMAIN

Aa - Ailanthis altissima - Tree of heaven
Ag - Afrocarpus gracilior, East African yellowwood
Ca - Celtis australis, European hackberry
Cd - Cedrus deodara, Deodar cedar
Ci - Carya illinoinensis, Pecan
Es - Eucalyptus species, Eucalyptus
Fu - Fraxinus uhdei, Evergreen ash
Fv - Fraxinus velutina, Velvet ash
Mg - Magnolia grandiflora, Southern magnolia
Li - Lagerstroemia indica, Crape myrtle
Pa - Platanus acerifolia, London plane tree
Pc - Prunus caroliniana, Carolina laurelcherry
Pr - Platanus racemosa, California sycamore
Pl- Prunus ilicifolia ssp lyonii - Catalina cherry
Pt - Prunus x cerasifera 'Thundercloud', Purpleleaf plum
Qa - Quercus agrifolia, Coast live oak
Qi - Quercus ilex, Holly oak
Ql - Quercus lobata, Valley oak
Tm - Taxodium mucronatum, Montezuma bald cypress
Uc - Umbellularia californica, California bay
Up - Ulmus parvifolia, Chinese elm

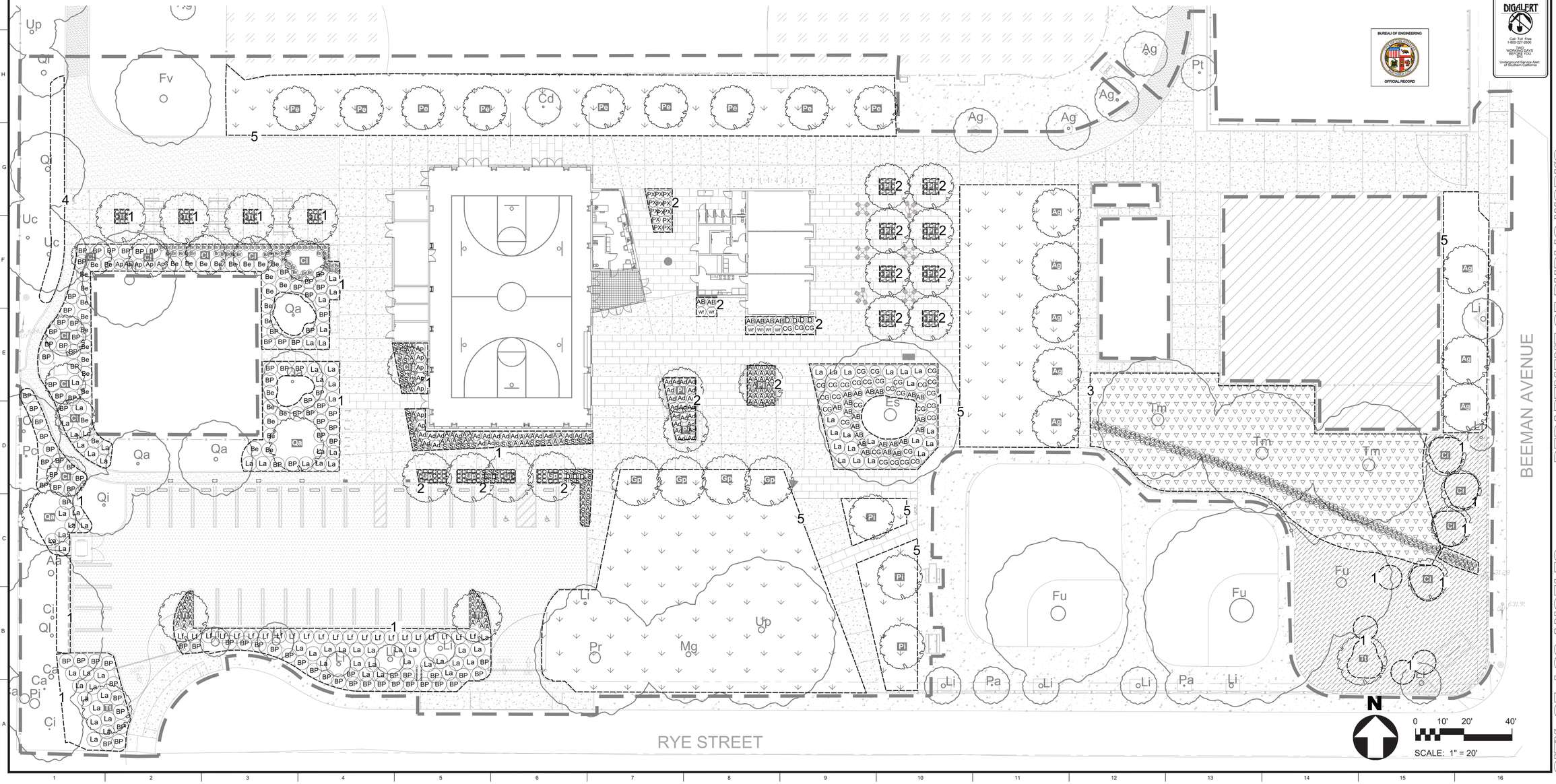

THE CITY OF LOS ANGELES OR ITS OFFICERS OR AGENTS SHALL NOT BE RESPONSIBLE FOR THE ACCURACY OR COMPLETENESS OF ELECTRONIC COPIES OF THIS PLAN SHEET.

TEMPLATE SHEET REVISION DATE: 08/2014
REVISION DATE: 6/24/2019 10:26 AM FILE: O:\IN-HOUSE-DESIGN\STUDIO CITY GYMNASIUM (RL)\18_DESIGN\LANDSCAPE\WORKING CDS\SCR\C-PLANTING PLAN L701-L702.DWG

REVISION DATES (DESIGN STAGE ONLY)

DIG ALERT — Call Toll Free 1-800-227-2600 TWO WORKING DAYS BEFORE YOU DIG. Underground Service Alert of Southern California

BUREAU OF ENGINEERING — OFFICIAL RECORD

BUREAU OF ENGINEERING — CITY OF LOS ANGELES — ENGINEERING

NO.	REVISIONS:	DATE:	BY:
1			
2			
3			
4			
5			

BUILDING NO.

INDEX NO. RP-300106

LANDSCAPE ARCHITECT — No. 3060 — Renewal Date 08/31/2021 — STATE OF CALIFORNIA

CITY OF LOS ANGELES — DEPARTMENT OF PUBLIC WORKS

CITY ENGINEER

DATE:	
04/30/19	
04/30/19	
04/30/19	
04/30/19	
04/30/19	

TED ALLEN, PE — ARCHITECTURAL DIVISION

ARCHITECT: RICHARD W. FISHER LIC. NO. 3060 04/30/19
DESIGNED BY: RICHARD W. FISHER 04/30/19
DRAWN BY: GREG MOESER 04/30/19
CHECKED BY: JANE ADRIAN 04/30/19
APPROVED BY: MAHMOOD KARIMZADEH, A.I.A. DEPUTY CITY ENGINEER 04/30/19

CLIENT: DEPARTMENT OF RECREATION AND PARKS
GENERAL MANAGER: MICHAEL A. SHULL

SHEET TITLE: PLANTING PLAN
PROJECT: STUDIO CITY GYMNASIUM
ADDRESS: 12621 RYE STREET STUDIO CITY, CA 91604

WORK ORDER NO. E170267B
PLAN FILE NO.
DRAWING NO. L701
SHEET 209 OF SHEETS 211

PLOTTED: 6/24/2019 4:16 PM

Application:

RIO APPLICATION AND CHECKLIST FOR MINISTERIAL REVIEW
Administrative Clearance for River Improvement Overlay District

Related Zone Code Sections: Ordinance 183,145 established the River Improvement Overlay (RIO) District; Refer to the Section 13.17 of the Los Angeles Municipal Code for detailed instructions.

Note: The Administrative Clearance fee shall be paid prior to receiving the clearance.

	Drawing Sheet	Administrative Use Only
Section F- Development Regulations		
1. Landscaping. Indicate the drawing sheet that illustrates the percentage of new landscaped area and the associated plant species. The drawing should identify whether a plant is either a native species, Watershed Wise and/or from the Los Angeles County River Master Plan Landscaping Guidelines and Plant Palettes. An exception is also made for herbs, fruits or vegetable plants.	L701/ L702	☐
2. Screening/Fencing.		
a. **Loading/Off-Street Parking.** For a project with any loading areas and/or off-street parking facilities that contain three or more spaces indicate the drawing sheet that illustrates the location of the parking/loading areas and the location, height and design of the screen/fence that shields views of the parking/loading from the abutting right-of-ways and the River.	L701	☐
b. **Equipment.** For a project that includes any exterior equipment (electrical transformers, mechanical units, water meters) indicate the drawing sheet(s) that illustrate the location of each equipment and any associated screening so that the equipment is screened from public view. .	L401/L701	☐
c. **Exterior Trash Enclosures**. For a project that includes a trash disposal unit indicate the drawing sheet that illustrates the location of the unit(s) and the design of any enclosure(s).	A530/ A010	☐
d. **Fencing.** For any project, with the exception of single family homes (but including homes built as part of the small lot ordinance) that faces a street that crosses the river or terminates at the river or a river frontage road and/or faces a river frontage road and includes a fence within the front or side yards that is visible from the street indicate the drawing sheet that illustrates the location and design of the fence.	NA	☐
3. Exterior Site Lighting. Indicate the drawing sheet that illustrates the location and design characteristics of any site and building mounted lighting.	E2.1	☐

	Drawing Sheet	Administrative Use Only
4. Projects within Inner Core:		
a. **Landscape Buffer.** Indicate the drawing sheet that illustrates the location of the 10' buffer.	NA	☐
b. **Fence.** Indicate the drawing sheet that illustrates the location and design, and height of any fence at or within the 10' buffer area.	NA	☐
c. **Fence Height**. See (b) above.		
d. **Gates.** Indicate the drawing sheet that illustrates the location, height design and operation of the gate(s). Small-lot projects shall comply with the requirements of Section F.4.f.i and therefore the gate may be a single gate from the entire project to the river and not from individual homes.	NA	☐
e. **Noise.** Projects subject to a conditional use permit for the sale or dispensing of alcoholic beverages, including beer and wine, shall indicate the drawing sheet that illustrates the location and design of all noise-attenuating features such that operational sounds shall not exceed 5 decibels above the existing or presumed ambient levels of the property line(s) of properties on the opposite bank.	NA	☐
f. **River Access.** See (d) above.		
g. **Riverfront Door.** Indicate the drawing sheet that illustrates the location of a doorway visible to, (not necessarily parallel to) and accessible from the river corridor or frontage road.	NA	☐
ADMINISTRATIVE CLEARANCE FEE—RECEIPT NUMBER		_____

Applicant's signature — 11/6/2018 Today's date

RICHARD W. FISHER
Applicant's name printed

WATER EFFICIENT LANDSCAPE WORKSHEET

Reference Evapotranspiration (ETo): 50.1

Hydrozone # /Planting Description*	Plant Factor (PF)	Irrigation Method*	Irrigation Efficiency (IE)*	ETAF (PF/IE)	Landscape Area (sq. ft.)	ETAF x Area	Estimated Total Water Use (ETWU)*
Regular Landscape Areas							
ZONE 1 - low water mixed shrub/tree planting	0.2	stream bubbler	0.75	0.267	13,801.00	3,680.27	114,316.44
ZONE 2 - moderate water mixed shrub/tree planting	0.4	stream bubbler	0.75	0.533	1,265.00	674.67	20,956.50
ZONE 3 - low water grasses	0.2	overhead spray rotor	0.75	0.267	6,635.00	1,769.33	54,959.03
ZONE 4 - Existing trees new irrigation - low water	0.2	stream bubbler	0.75	0.267	540.00	144.00	4,472.93
				Totals	22,241.00	6,268.27	
Special Landscape Areas							
ZONE 5 - turf areas - recreation				1	25,049.00	25,049.00	778,072.04
				1			-
				1			-
				Totals	25,049.00	25,049.00	
						ETWU Total	972,776.94
					Maximum Allowed Water Allowance (MAWA)		1,088,954.51

*Hydrozone #/Planting Description
E.g
1.) front lawn
2.) low water use plantings
3.) medium water use planting

*Irrigation Method
overhead spray
or drip

*Irrigation Efficiency
0.75 for spray head
0.81 for drip

*ETWU (Annual Gallons Required) = Eto x 0.62 x ETAF x Area
where 0.62 is a conversion factor that converts acre-inches per acre per year to gallons per square foot per year.

*MAWA (Annual Gallons Allowed) = (Eto) (0.62) [(ETAF x LA) + ((1-ETAF) x SLA)]
where 0.62 is a conversion factor that converts acre-inches per acre per year to gallons per square foot per year, LA is the total landscape area in square feet, SLA is the total special landscape area in square feet, and ETAF is .55 for residential areas and 0.45 for non-residential areas.

ETAF Calculations

Regular Landscape Areas

Total ETAF x Area	6268.27
Total Area	22241.00
Average ETAF	**0.28**

All Landscape Areas

Total ETAF x Area	31317.27
Total Area	47290.00
Sitewide ETAF	**0.66**

Average ETAF for Regular Landscape Areas must be 0.55 or below for residential areas, and 0.45 or below for non-residential areas.

RIVER IMPROVEMENT OVERLAY DISTRICT COMPLIANCE:

RIO COMPLIANT LANDSCAPE AREA: 15,560 SF (85.5%)
NON-COMPLAINT LANDSCAPE AREA: 2,645 SF (14.5%)
TOTAL: 18,205 SF

RIO COMPLIANT: PLANTS THAT ARE RIO COMPLIANT ARE NATIVE, ON WATERSHEDWISE PLANT LIST, OR LISTED IN THE LA COUNTY RIVER MASTER PLAN LANDSCAPING GUIDELINES AND PLANT PALETTES. SEE L701 FOR SPECIES/LANDSCAPE AREA DETAILS.

RIO COMPLIANCE AREA CALCULATION:
GROUNDCOVERS: DIRECT MEASUREMENT OF AREA.
SHRUBS: AREA OF SPACING/SIZE MULTIPLIED BY QUANTITY.
TREES: BOX SIZE AREA MULTIPLIED BY QUANTITY.

TURF AREA - TURF HAS NOT BEEN INCLUDED IN CALCULATION. PROJECT PROVIDES A NET REDUCTION IN TURF FROM EXISTING:

EXISTING TURF PRE-PROJECT: 80,723 SF
TURF POST-PROJECT: 24,418 SF (17,878 SF IS REHABILITATION OF EX. TURF).

PLANTING NOTES:

1. SOIL PREPARATION AND PLANTING SHALL NOT BE PERFORMED UNTIL THE IRRIGATION SYSTEM IS COMPLETED, INSPECTED AND APPROVED PER THE LANDSCAPE CONSTRUCTION NOTES.
2. ALL PLANTING AREAS SHALL RECEIVE SOIL PREPARATION PER THE LANDSCAPE CONSTRUCTION NOTES.
3. WHEN ALL PLANT MATERIALS ARE ON-SITE AND READY FOR PLANTING, CONTRACTOR SHALL PLACE ALL CONTAINER PLANTS - STILL INSIDE THEIR RESPECTIVE NURSERY CONTAINERS - IN THE PLANTING AREAS PER THE LAYOUT SHOWN ON THE PLANTING PLAN FOR INSPECTION AND APPROVAL BY THE LANDSCAPE ARCHITECT. NO PLANTING SHALL BE INSTALLED UNTIL THE TYPE, QUALITY AND LOCATION HAVE BEEN APPROVED BY THE LANDSCAPE ARCHITECT AND PLANTS INSTALLED PRIOR TO APPROVAL ARE SUBJECT TO REMOVAL AND RE-PLANTING OR REPLACEMENT AT THE CONTRACTOR'S EXPENSE. PROJECT MANAGER SHALL BE NOTIFIED MINIMUM 24 HOURS IN ADVANCE OF REQUESTED INSPECTION.
4. CONTRACTOR SHALL NOT PLACE PLANTS DIRECTLY IN FRONT OF IRRIGATION HEADS.
5. AVAILABILITY & SUBSTITUTIONS: NO SUBSTITUTIONS OF PLANT SPECIES, TYPE, CULTIVAR, SIZE ETC. WILL BE ACCEPTED WITHOUT PRIOR APPROVAL OF PROJECT MANAGER. CONTRACTOR IS EXPECTED TO UTILIZE ALL REASONABLE RESOURCES IN THE SOUTHERN CALIFORNIA REGION BEFORE DETERMINING IF A SPECIFIED MATERIAL IS UNAVAILABLE.
6. ALL PLANTING AREA EXCEPT TURF AREAS SHALL RECEIVE A MINIMUM TWO (2) INCH DEEP LAYER OF TOP DRESSING MULCH PER THE PLANTING DETAILS AND THE LANDSCAPE CONSTRUCTION NOTES MATERIALS LIST.
7. MULCH SHALL BE SPREAD EVENLY THROUGHOUT PLANTING BEDS. DO NOT BURY PLANT CROWNS.
8. PLANTING LEGEND AS SHOWN ON EACH PAGE IS ***FOR THE ENTIRE PROJECT***, AND IS INCLUDED FOR THE CONVENIENCE OF THE CONTRACTOR. IN CASE OF DISCREPANCIES, THE QUANTITY OF SYMBOLS FOR EACH PLANT SHOWN ON THE PLANTING PLAN SHALL TAKE PRECEDENCE. CONTRACTOR IS RESPONSIBLE TO VERIFY ALL QUANTITIES AS SHOWN ON THE PLANTING PLAN.
9. ALL TREES, 24"-BOX OR LARGER, SHALL BE 2" MIN. CALIPER.
10. SEE TREE PROTECTION PLAN, SHEET LXX FOR EX. TREE SPECIES TO REMAIN.

GREEN BUILDING NOTES:

1. FOR PROJECTS THAT INCLUDE LANDSCAPE WORK, THE LANDSCAPE CERTIFICATION, FORM GRN 12, SHALL BE COMPLETED PRIOR TO FINAL INSPECTION APPROVAL.
2. RECIRCULATING WATER SYSTEMS SHALL BE USED FOR WATER FEATURES.
3. A MINIMUM 3-INCH LAYER OF MULCH SHALL BE APPLIED ON ALL EXPOSED SOIL SURFACES OF PLANTING AREAS EXCEPT TURF AREAS, CREEPING OR ROOTING GROUNDCOVERS, OR DIRECT DIRECT SEEDING APPLICATIONS WHERE MULCH IS CONTRAINDICATED.
4. FOR SOILS LESS THAN 6% ORGANIC MATTER IN THE TOP 6 INCHES OF SOIL, COMPOST AT A RATE OF A MINIMUM OF FOUR CUBIC YARDS PER 1,000 SQUARE FEET OF PERMEABLE AREA SHALL BE INCORPORATED TO A DEPTH OF SIX INCHES INTO THE SOIL.
5. I AGREE TO COMPLY WITH THE REQUIREMENTS OF THE WATER EFFICIENT LANDSCAPE ORDINANCE AND SUBMIT A COMPLETE LANDSCAPE DOCUMENTATION PACKAGE.

09/13/2018
RICHARD W. FISHER, LANDSCAPE ARCHITECT DATE

6. I HAVE COMPLIED WITH THE CRITERIA OF THE ORDINANCE AND APPLIED THEM FOR THE EFFICIENT USE OF WATER IN THE LANDSCAPE DESIGN PLANS.

09/13/2018
RICHARD W. FISHER, LANDSCAPE ARCHITECT DATE

BUREAU OF ENGINEERING — OFFICIAL RECORD

DIGALERT
Call Toll Free 1-800-227-2600
TWO WORKING DAYS BEFORE YOU DIG
Underground Service Alert of Southern California

THE CITY OF LOS ANGELES OR ITS OFFICERS OR AGENTS SHALL NOT BE RESPONSIBLE FOR THE ACCURACY OR COMPLETENESS OF ELECTRONIC COPIES OF THIS PLAN SHEET.

REVISION DATES (DESIGN STAGE ONLY)

TEMPLATE SHEET REVISION DATE: 08/2014
REVISION DATE: 6/24/2019 10:26 AM FILE: O:\IN-HOUSE-DESIGN\STUDIO CITY GYMNASIUM (RL)\18_DESIGN\LANDSCAPE\WORKING CDS\SCRC-PLANTING PLAN L701-L702.DWG

CITY OF LOS ANGELES DEPARTMENT OF PUBLIC WORKS
BUREAU OF ENGINEERING
ENGINEERING CITY OF LOS ANGELES

NO.	REVISIONS:	DATE	BY:
1			
2			
3			
4			

BUILDING NO.
INDEX NO. RP-300106

LANDSCAPE ARCHITECT — No. 3060 — STATE OF CALIFORNIA
Signature
Renewal Date 08.31.20
Date

CITY ENGINEER

	DATE:
	04/30/19
	04/30/19
	04/30/19
	04/30/19
	04/30/19

TED ALLEN, PE
ARCHITECTURAL DIVISION
ARCHITECT: RICHARD W. FISHER LIC. NO. 3060
DESIGNED BY: RICHARD W. FISHER
DRAWN BY: GREG MOESER
CHECKED BY: JANE ADRIAN
APPROVED BY: MAHMOOD KARIMZADEH, A.I.A. DEPUTY CITY ENGINEER

CLIENT: DEPARTMENT OF RECREATION AND PARKS
GENERAL MANAGER: MICHAEL A. SHULL

SHEET TITLE: PLANTING NOTES/FORMS
PROJECT: STUDIO CITY GYMNASIUM
ADDRESS: 12621 RYE STREET STUDIO CITY, CA 91604

WORK ORDER NO. E170267B
PLAN FILE NO.
DRAWING NO. L702
SHEET 210 OF SHEETS 211

PLOTTED: 6/24/2019 4:17 PM

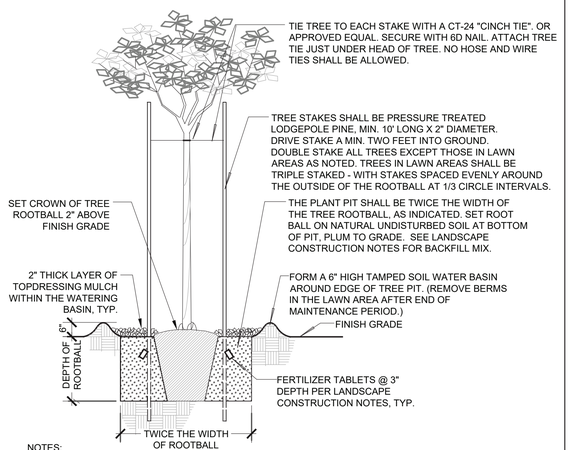

NOTES:
1. ALL TREES PLANTED IN LAWN AREAS SHALL HAVE A 36" DIAMETER UNPLANTED MULCHED AREA AROUND EACH TREE TRUNK.
2. WHEN PLANTING TREES IN AREAS TO RECEIVE SOD, CONTRACTOR SHALL COMPENSATE FOR THE THICKNESS OF THE SOD AND SET TOP OF TREE ROOTBALL APPROPRIATELY TO AVOID A LOW AREA AND PONDING OF WATER.

RP VERSION 03-18-03 / RDF, JPH, SHD, SLG

J1 TREE PLANTING AND STAKING

N.T.S. | BOE VERSION Mar/08 RF, SD | RP DETAIL L2000

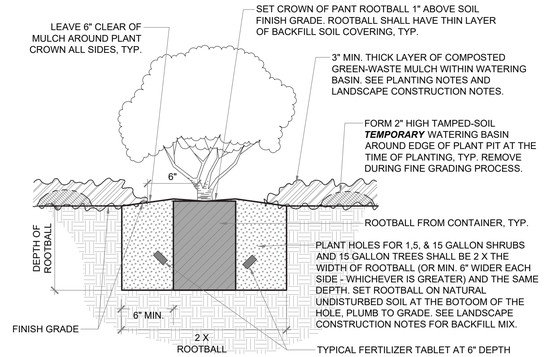

SECTION

NOTES:
1. PLANTING FINISH GRADE SHALL BE DEFINED AS TOP OF SOIL.
2. IN ALL CASES THE PLANT ROOTBALL SHALL BE COMPLETELY COVERED WITH BACKFILL SOIL - NO PORTION OF THE ROOTHBALL SHALL BE LEFT EXPOSED TO AIR OR SUNLIGHT ***BEFORE APPLICATION OF MULCH***.
3. DELETE FERTILIZER TABLETS FOR CERTAIN CALIF. NATIVE PLANTS - SEE PLANTING LEGEND.

BOE VERSION 052417 RWF/JA

J5 SHRUB PLANTING

N.T.S. | BOE VERSION Sep/07 RWF | RP DETAIL L2030

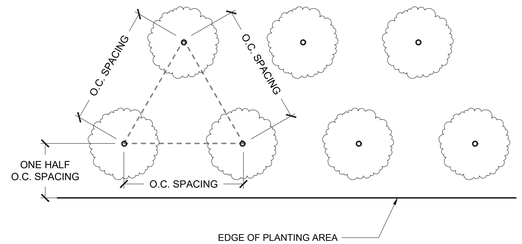

RAP VERSION 6-8-98 / STS, JPH

J9 ON-CENTER TRIANGULAR PLANT SPACING

N.T.S. | BOE VERSION Sep/07 | RP DETAIL L2060

BUREAU OF ENGINEERING
OFFICIAL RECORD

ENGINEERING
CITY OF LOS ANGELES

BUREAU OF ENGINEERING

NO.	REVISIONS:	DATE:	BY:

BUILDING NO.

INDEX NO. - **RP-300106**

LANDSCAPE ARCHITECT ★ LICENSED ★ STATE OF CALIFORNIA
No. 3060
Signature
Date 04-30-19
Renewal Date 04-30-19

CITY OF LOS ANGELES DEPARTMENT OF PUBLIC WORKS
CITY ENGINEER

DATE:	
04/30/19	
04/30/19	
04/30/19	
04/30/19	
04/30/19	

LIC. NO. 3060

TED ALLEN, PE
ARCHITECTURAL DIVISION

ARCHITECT: RICHARD W. FISHER LIC. NO. 3060
DESIGNED BY: RICHARD W. FISHER
DRAWN BY: GREG MOESER
CHECKED BY: JANE ADRIAN
APPROVED BY: MAHMOOD KARIMZADEH, A.I.A. DEPUTY CITY ENGINEER

CLIENT: DEPARTMENT OF RECREATION AND PARKS
GENERAL MANAGER: MICHAEL A. SHULL

SHEET TITLE: PLANTING DETAILS

PROJECT: STUDIO CITY GYMNASIUM

ADDRESS: 12621 RYE STREET
STUDIO CITY, CA 91604

WORK ORDER NO. E170267B
PLAN FILE NO.
DRAWING NO. L703
SHEET 211 OF SHEETS 211

PLOTTED: 6/24/2019 4:17 PM

REVISION DATES (DESIGN STAGE ONLY)

THE CITY OF LOS ANGELES OR ITS OFFICERS OR AGENTS SHALL NOT BE RESPONSIBLE FOR THE ACCURACY OR COMPLETENESS OF ELECTRONIC COPIES OF THIS PLAN SHEET.

TEMPLATE SHEET REVISION DATE: 08/2014
REVISION DATE: 5/15/2019 5:44 PM
FILE: Q:\IN-HOUSE-DESIGN\STUDIO CITY GYMNASIUM (RL)\18_DESIGN\LANDSCAPE\WORKING CDS\CRC-PLANTING DETAILS L703.DWG

Attachment 02

APPROVED
DEC 18 2019
BOARD OF RECREATION
AND PARK COMMISSIONERS

BOARD REPORT NO. 19-257

DATE December 18, 2019 C.D. 2

BOARD OF RECREATION AND PARK COMMISSIONERS

SUBJECT: STUDIO CITY RECREATION CENTER – NEW GYMNASIUM (PRJ20404) (W.O. #E170267B) PROJECT - APPROVAL OF FINAL PLANS AND CALL FOR BIDS; CATEGORICAL EXEMPTION FROM THE PROVISIONS OF THE CALIFORNIA ENVIRONMENTAL QUALITY ACT (CEQA) PURSUANT TO ARTICLE III, SECTION 1, CLASS 2(2) [REPLACEMENT OF AN EXISTING STRUCTURE WITH A NEW STRUCTURE OF SUBSTANTIALLY THE SAME SIZE, PURPOSE AND CAPACITY] AND CLASS 3(17) [PROJECTS INVOLVING LESS THAN 15,000 SQUARE FEET] OF CITY CEQA GUIDELINES AND ARTICLE 19, SECTION 15302(b) OF CALIFORNIA CEQA GUIDELINES

AP Diaz		S. Piña-Cortez	
H. Fujita		C. Santo Domingo	DP
V. Israel		N. Williams	

General Manager

Approved X Disapproved _____ Withdrawn _____

RECOMMENDATIONS

1. Approve the final plans and specifications, substantially in the form on file with the Board of Recreation and Park Commissioners (Board) Office and as attached to this Report, for the proposed Studio City Recreation Center – New Gymnasium (PRJ20404) (W.O #E170267F) Project (Project);

2. Approve the date to be advertised for receipt of bids for this Project as Tuesday, February 11, 2020 at 2:00 P.M. in the Board Office;

3. Find that the proposed Project is categorically exempt from the provisions of the California Environmental Quality Act (CEQA) pursuant to Article III, Section 1, Class 2(2) [Replacement of an Existing Structure with a New Structure of Substantially the Same Size, Purpose and Capacity] and Class 3(17) [Projects Involving Less Than 15,000 Square Feet] of City CEQA Guidelines and Article 19, Section 15302(b) of California CEQA Guidelines, and direct Department of Recreation and Parks (RAP) staff to file a Notice of Exemption (NOE) with the City and the Los Angeles County Clerk's Office; and,

4. Authorize RAP's Chief Accounting Employee or designee to make technical corrections as necessary to carry out the intent of this Report.

SUMMARY

The Studio City Recreation Center (locally known as Beeman Park) is a large, 8.46-acre neighborhood park located at 12621 West Rye Street, Studio City. The existing amenities include an auditorium/small gymnasium, lighted baseball diamond, basketball courts, tennis courts, children's play area, barbecue pits, picnic tables, and outdoor fitness equipment.

The facility also provides various community programs and classes, including a youth baseball program that is considered the second largest program offered in public parks.

The proposed Project is a Proposition K – L.A for Kids Program (Prop K) Specified project. The scope of work includes demolition of the existing 5,723 square-foot community building, and construction of a new gymnasium and community center, totaling approximately 12,000 square-feet. Upon completion, the building will provide a much-needed space for RAP's essential programs and classes serving the community. The proposed Project will also include site improvements, including but not limited to, reconfiguration and expansion of the existing parking lot, new hardscape areas to provide circulation and gathering spaces, improvements to the surrounding landscape through turf, irrigation repairs, new trees and outdoor lightings.

As required by Prop K, three (3) Local Volunteer Neighborhood Oversight Committee (LVNOC) meetings were held to provide opportunities for stakeholders and community members to engage in the development and design of the proposed Project. Meetings were conducted on September 9, 2015, December 17, 2015, and July 20, 2017. The proposed Project received overwhelming support from the community members and the Office of Council District 2. Five (5) additional community outreach meetings were also conducted on June 22, 2019, June 27, 2019, July 17, 2019, July 22, 2019, and July 30, 2019, to satisfy the Proposition 68 funding application requirements. The community was briefed on the proposed public art selection, sustainable design in terms of Leadership in Energy and Environmental Design (LEED), Net Zero Energy Building (NetZero), and other related issues.

The City Engineer's estimate for the proposed Project's construction cost is Eleven Million, Five-Hundred Thousand Dollars ($11,500,000.00).

Funds are currently available from the following funds and account:

FUNDING SOURCE	FUND/DEPT./ACCT NO.
Proposition K – YR-14	43K/10/10G480
Proposition K - YR-18	43K/10/10L479
Proposition K - YR-19	43K/10/10MPCV
Proposition K - YR 23	43K/10/10SPAR
Quimby	302/89/89460K-ST

There is currently a funding shortfall of approximately $8.5 million to complete the construction, and RAP has submitted a grant application for an amount of $8.5 million to the State's Proposition 68 funds to make up a portion of the funding shortfall. Additional funding sources may potentially come from the City's Capital Improvement Expenditure Program (CIEP), or other sources to be identified.

TREES AND SHADE

The Project proposes to remove eleven (11) existing trees and plant sixty-three (63) new trees.

The existing trees proposed to be removed are: four (4) Velvet Ash, two (2) Crape Myrtle, two (2) Southern Magnolia, one (1) Benjamin Fig, one (1) Brisbane Box, and one (1) Holly Oak, which is a non-native unprotected tree per definition of Protected Tree under Ordinance 177404.

The new trees proposed to be planted are: eight (8) African Fern Pine, fourteen (14) Desert Willow, eight (8) Australian Willow, nine (9) Eldarica Pine, fourteen (14) Red Push Pistache, two (2) Coast Live Oak, and eight (8) Tipuana.

All new trees proposed to be planted are 36-inch box trees and have a projected five (5) year canopy diameter of sixteen (16) feet to twenty (20) feet. Approximately twelve thousand (12,000) square feet of tree canopy is projected to be provided by the new trees after five (5) years, assuming a survival rate of 75 percent.

ENVIRONMENTAL IMPACT

The proposed Project consists of the construction of a 12,000 square feet structure in replacement of an existing structure, with approximately the same size, purpose and capacity. As such RAP staff recommends that the Board determines that it is exempt from the provisions of the California Environmental Quality Act (CEQA) pursuant to Article III, Section 1, Class 2(2) and Class 3(17) of City CEQA Guidelines and Article 19, Section 15302(b) of California CEQA Guidelines. An NOE will be filed with the Los Angeles County Clerk upon Board's approval.

FISCAL IMPACT

The proposed Project will be funded by a combination of the aforementioned funding sources. There is no immediate fiscal impact to RAP's General Fund at this time. However, operations and maintenance costs will be evaluated and included in future RAP budget requests.

The City's liability under the contract resulting from this bid process shall only extend to the present City appropriation to fund the contract. However, if the City appropriates additional funds for any succeeding years, the City's liability shall be extended to the extent of such appropriation, subject to the terms and conditions of the contract.

STRATEGIC PLAN INITIATIVES AND GOALS

Approval of this Board Report advances RAP's Strategic Plan by supporting:

Goal No. 2:	Offer affordable and equitable recreational programming.
Outcome No. 2:	Improved health and social equity for young Angelenos.
Result:	The construction of the proposed gymnasium will give RAP staff the space and opportunity to offer programs and classes to serve the community.

This Report was prepared by Shun Yu Zhang, Project Manager, BOE Architectural Division. Reviewed by Neil Drucker, Interim Division Head and Program Manager, BOE Architectural Division; and Darryl Ford, Superintendent, Planning, Maintenance and Construction Branch.

LIST OF ATTACHMENTS/EXHIBITS

Attachment 1 – Final Plans and Specifications

Attachment 03

BUREAU OF ENGINEERING
DEPARTMENT OF PUBLIC WORKS
CITY OF LOS ANGELES

STUDIO CITY RECREATION CENTER

12621 RYE STREET, STUDIO CITY, CA 91604

PROJECT TEAM

OWNER: **DEPARTMENT OF RECREATION AND PARKS**
MICHAEL A. SHULL
GENERAL MANAGER
221 NORTH FIGUEROA ST, SUITE 1550
LOS ANGELES, CA 90015

PROJECT MANAGEMENT: **ARCHITECTURAL DIVISION**
NEIL DRUCKER
DIVISION MANAGER
149 S. BROADWAY, SUITE 830
LOS ANGELES, CA 90015
(213) 485-4000
FAX (213) 485-4836
CONTACT - SHUN YU ZHANG, P.E.
PROJECT MANAGER

CONSTRUCTION MANAGEMENT: **CONSTRUCTION MANAGEMENT GROUP**
JOSE R. FUENTES, P.E.
DIVISION ENGINEER
1149 S. BROADWAY, SUITE 800
LOS ANGELES, CA 90015

BID AND AWARD: **PROJECT AWARD AND CONTROL DIVISION**
EDICK OHANIAN
DIVISION MANAGER
1149 S. BROADWAY, SUITE 140
LOS ANGELES, CA 90015

ARCHITECTURAL: **ARCHITECTURAL DIVISION**
NEIL DRUCKER
DIVISION MANAGER
1149 S. BROADWAY, SUITE 830
LOS ANGELES, CA 90015
(213) 485-4000
FAX (213) 485-4836
CONTACT - ROBERT LOMELIN
SR. ARCHITECT
ZOHRA AKHTER
PROJECT DESIGNER
RICHARD FISHER
LANDSCAPE ARCHITECT
GREG MOSER
LANDSCAPE DESIGNER

STRUCTRUAL CONSULTANT: **NAST ENTERPRISES CORP.**
554 S. SAN VICENTE BLVD, SUITE 202
LOS ANGELES, CA 90048
(310) 268-9419

SURVEY: **SURVEY DIVISION**
JIM LANTRY
ENGINEER OF SURVEYOR
201 N. FIGUEROA ST.
LOS ANGELES, CA 90012

GEOTECHNICAL: **GEOTECHNICAL ENGINEERING DIVISION**
PATRICK SCHMIDT
DIVISION MANAGER
1149 S. BROADWAT, SUITE 100
LOS ANGELES, CA 90015
CONTACT - EASTON FORCIER, P.E.

ENVIRONMENTAL: **ENVIORNMENTAL MANAGEMENT GROUP**
MARIA MARTIN
GROUP MANAGER
1149 S. BROADWAY, SUITE 600
LOS ANGELES, CA 90015

ARCHITECTURAL SUPPORT: **SPARANO + MOONEY ARCHITECTURE (SMA)**
642 MOULTON AVE, STUDIO W4
LOS ANGELES, CA 90031

CIVIL ENGINEER CONSULTANT: **VCA ENGINEERS, INC.**
1041 S. GARFIELD AVE, SUITE #210
ALHAMBRA, CA 91801
CONTACT - AUTUMN WAGGONER

MECHANICAL & PLUMBING CONSULTANT: **MAROKO & SHWE, INC.**
1106-B WEST MAGNOLIA BLVD.
BURBANK, CA 91506
CONTACT - JAMES SHWE, P.E.

ELECTRICAL CONSULTANT: **SILVER ROTH AND ASSOCIATES**
511 S. FAIRFAX AVENUE
LOS ANGELES, CA 90036
CONTACT - FELIX ROTH

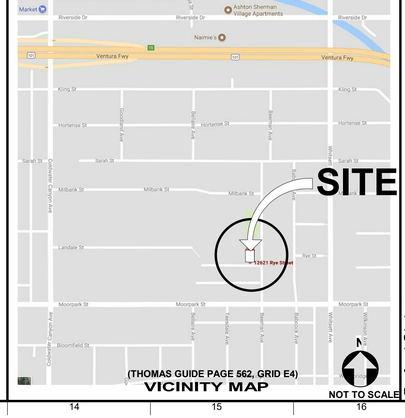

(THOMAS GUIDE PAGE 562, GRID E4)
VICINITY MAP
NOT TO SCALE

BUREAU OF ENGINEERING
OFFICIAL RECORD

REVISION DATES: (DESIGN STAGE ONLY)

THE CITY OF LOS ANGELES OR ITS OFFICERS OR AGENTS SHALL NOT BE RESPONSIBLE FOR THE ACCURACY OR COMPLETENESS OF ELECTRONIC COPIES OF THIS PLAN SHEET.

TTLB TEMPLATE REVISION DATE: 08/2014
SHEET ISSUE DATE: 06/01/17
FILE PATH: A:360://Studio City Recreation Center/SCRC-Project Model_Central_Final.rvt

BUREAU OF ENGINEERING
DEPARTMENT OF PUBLIC WORKS
CITY OF LOS ANGELES
ENGINEERING
CITY OF LOS ANGELES

NO.	REVISION DESCRIPTION	DATE	BY

SERIAL NO. ---
WORK ACCEPTED: ---
BUILDING NO. --
INDEX NO.

REGISTERED PROFESSIONAL ENGINEER GARY LEE MOORE No. C-48446 CIVIL STATE OF CALIFORNIA

CITY ENGINEER
8/12/2019
DATE
ACCEPTED BY:
Electronically signed by Gary Lee Moore
CHIEF DEPUTY CITY ENGINEER/ PROGRAM MANAGER
Gary Lee Moore
Electronically signed by GARY LEE MOORE 8/12/2019 2:15 PM
CITY ENGINEER
08/13/2019
DATE

DEPARTMENT OF PUBLIC WORKS
BUREAU OF ENGINEERING
CITY OF LOS ANGELES
GARY LEE MOORE, PE, ENV SP
CITY ENGINEER

VERTICAL CONTROL:
HORIZONTAL CONTROL:
SHEET TITLE: COVER SHEET
PROJECT: STUDIO CITY RECREATION CENTER
ADDRESS: 12621 RYE STREET, STUDIO CITY, CA 91604

Project Status
PROJECT ISSUE DATE: 1-24-2019

WORK ORDER NO.
E170267B
PLAN FILE NO.
DRAWING NO.
G001
SHEET 1 OF SHEETS 211

PLOTTED:5/3/2019 1:34:13 PM

Attachment 03

APPROVED
JUL 16 2020
BOARD OF RECREATION
AND PARK COMMISSIONERS

BOARD REPORT **NO.** 20-141

DATE July 16, 2020 C.D. 2

BOARD OF RECREATION AND PARK COMMISSIONERS

SUBJECT: STUDIO CITY RECREATION CENTER – NEW GYMNASIUM (PRJ20404) (W.O. #E170267B) PROJECT – REJECTION OF ALL BIDS AND RE-BID

AP Diaz		for S. Piña-Cortez	
H. Fujita		*C. Santo Domingo	DF
V. Israel		N. Williams	

M. Alexe
General Manager

Approved X Disapproved _____ Withdrawn _____

RECOMMENDATIONS

1. Reject all bids received on March 18, 2020, for the Studio City Recreation Center – New Gymnasium (PRJ20404) (W.O. #E170267B) Project (Project); and,

2. Authorize the Department of Recreation and Parks' (RAP) Chief Accounting Employee or Designee to make technical corrections as necessary to carry out the intent of this Report.

SUMMARY

The Project, located at 12621 Rye Street, Studio City, CA 91604, is a Proposition K – L.A. for Kids Program (Prop K) Specified project. The scope of work includes the demolition of the existing 5,273 square feet (SF) community building, and the construction of a new gymnasium and community center, totaling approximately 12,000 SF. The site improvements include reconfiguration and expansion of the existing parking lot, new hardscape areas to provide circulation and gathering spaces, improvements to the surrounding landscaping, irrigation repairs, new trees, and outdoor lighting. The Project is targeting both Leadership in Energy and Environmental Design (LEED) and Net Zero Energy Building (NetZero) certifications.

The Project is well supported by the community members and the Office of Council District 2. Three (3) Local Volunteer Neighborhood Oversight Committee (LVNOC) meetings were held to provide opportunities for stakeholders and community members to engage in the development and design of the proposed Project. Five (5) additional community outreach meetings were also conducted in the summer of 2019 as part of the community outreach requirements for the State's Proposition 68 funding.

On December 18, 2019, the Board of Recreation and Park Commissioners (Board) approved the final plans and call for bids for the Project (Report No. 19-257). The plans and specifications were prepared by the Department of Public Works, Bureau of Engineering (BOE), Architectural Division, with supporting design services provided by Sparano+Mooney Architecture, Inc. The City Engineer's estimate for the Project's construction cost was Eleven Million, Five Hundred Thousand Dollars ($11,500,000).

On March 18, 2020, the Board received a total of two (2) bids as follows:

No.	**Contractor**	**Base Bid**
1	A & B Construction, Inc.	$13,765,000
2	M.S. Construction Management Group	$12,995,000

Staff has evaluated the subcontractor outreach documentation submitted by both bidders for compliance with the City's Business Inclusion Program (BIP) under the Mayor's Directive No. 14, and determined that both bids failed one or more of the six (6) indicators as required, and are not in compliance with the BIP's subcontractor outreach and participation requirements. Both bids submitted by A & B Construction, Inc. and M.S. Construction Management Group have been deemed non-responsive.

Funds are currently available from the following funds and accounts:

FUNDING SOURCE	FUND/DEPT./ACCT NO.
Proposition K – YR-14	43K/10/10G480
Proposition K – YR-18	43K/10/10L479
Proposition K – YR-19	43K/10/10MPCV
Proposition K – YR-23	43K/10/10SPAR
Quimby	302/89/89460K-ST

The current funding shortfall to complete the construction is estimated at $11.5 million. It is noted that RAP submitted an application to the State for the afore-mentioned Proposition 68 Grant in an amount of $8.5 million to help reduce the Project's funding shortfall. Unfortunately, it was announced on February 25, 2020 that the Project was not selected to receive the Proposition 68 Grant.

Since both bids received have been deemed non-responsive and there is not sufficient funding to award the Project, it is recommended that the Board reject all bids at this time. The Project will be re-bid at a later time through the RAP's as-needed pre-qualified general contractors for park facilities construction once the Project is fully funded.

TREES AND SHADE

The Project proposes to remove eleven (11) existing trees and plant sixty-three (63) new trees.

The existing trees proposed to be removed are: four (4) Velvet Ash, two (2) Crape Myrtle, two (2) Southern Magnolia, one (1) Benjamin Fig, one (1) Brisbane Box, and one (1) Holly Oak, which is a non-native unprotected tree per definition of Protected Tree under Ordinance 177404.

The new trees proposed to be planted are: eight (8) African Fern Pine, fourteen (14) Desert Willow, eight (8) Australian Willow, nine (9) Eldarica Pine, fourteen (14) Red Push Pistache, two (2) Coast Live Oak, and eight (8) Tipuana.

All new trees proposed to be planted are 36-inch box trees and have a projected five (5) year canopy diameter of sixteen (16) feet to twenty (20) feet. Approximately twelve thousand (12,000) square feet of tree canopy is projected to be provided by the new trees after five (5) years, assuming a survival rate of 75 percent.

ENVIRONMENTAL IMPACT

This Project was previously evaluated for environmental impact in accordance with the California Environmental Quality Act (CEQA), and the Board has determined that it is categorically exempt from the provisions of CEQA (Report No. 19-257). Therefore, no further documentation is necessary.

FISCAL IMPACT

The proposed Project will be funded by a combination of the aforementioned funding sources. There is no immediate fiscal impact to RAP's General Fund at this time.

STRATEGIC PLAN INITIATIVES AND GOALS

Approval of this Board Report advances RAP's Strategic Plan by supporting:

Goal No. 2: Offer affordable and equitable recreational programming.
Outcome No. 2: Improved health and social equity for young Angelenos.

Result: The Construction of the proposed gymnasium will give RAP staff the space and opportunity to offer programs and classes to serve the community.

This Report was prepared by Shun Yu Zhang, Project Manager, BOE Architectural Division. Reviewed by Neil Drucker, Assistant Division Head, BOE Architectural Division; and Darryl Ford, Superintendent, Planning, Maintenance and Construction Branch.

U.S. DEPARTMENT OF HOUSING AND URBAN DEVELOPMENT
WASHINGTON, D.C. 20410-1000

OFFICE OF COMMUNITY PLANNING AND DEVELOPMENT

March 2, 2023

Geoff Kees Thompson
City of Los Angeles
12621 Rye St.
Studio City, CA 91604
Email: geoff.thompson@lacity.org

Dear Thompson:

In the Consolidated Appropriations Act, 2023 (Public Law 117-328) (the FY2023 Act), Congress made funding available $2,982,285,641 for "grants for the Economic Development Initiative (EDI) for the purposes, and in amounts, specified for Community Project Funding/Congressionally Directed Spending" in the associated table included in the accompanying joint explanatory statement (JES). These "Community Project Funding" or "CPF" awards are administered by the Department of Housing and Urban Development (HUD).

HUD received the below information about your project as listed on the JES, which was printed in the Senate section of the Congressional Record on December 20, 2022 (CREC-2022-12-20-pt3-PgS9325-2.pdf (congress.gov)). A Grant Number (noted below) has been generated by HUD and will be the unique identifier for your project throughout the grant process.

Grantee:	City of Los Angeles
Project:	Studio City/Beeman Recreational Center Capital Improvement Project
Amount:	$3,000,000
Grant Number	B-23-CP-CA-0216

Pursuant to the requirements associated with the FY2023 Act, this FY2023 Grant Award Letter outlines initial grant award requirements and information needed from you to prepare your FY2023 CPF Grant Agreement for execution. The Grant Award Letter also provides an overview of the steps to execute your Grant Agreement. Further detail is provided within the FY2023 CPF Grant Guide.

This "Grant Award Letter," is included in the "Grant Award Package" transmitted with the corresponding email. The Grant Award Package also includes:

- the "FY2023 Community Project Funding Grant Guide" (FY2023 CPF Grant Guide),
- your FY2023 Community Project Funding Grant Agreement "FY2023 CPF Grant

- Agreement," and
- standard forms required to execute your Grant Agreement.

A brief overview of these documents is below:

1) **FY2023 CPF Grant Guide**: The FY2023 CPF Grant Guide provides instructions for completing the requested information and filling out the required administrative forms to initiate your FY2023 CPF Grant Agreement. The FY2023 CPF Grant Guide also provides information on the requirements that will govern these funds, as provided by the FY2023 Act, and the cross-cutting requirements that generally apply to all HUD awards as provided by HUD regulations and other applicable Federal regulations and statutes.

   The FY2023 CPF Grant Guide provides guidance and instructions for access to your grant funds and fulfilling the reporting requirements for this award. The FY2023 CPF Grant Guide provides guidance for various grant administration-related actions including the Disaster Recovery Grants Reporting (DRGR) system for the financial management of these grant funds and periodic reporting of project status and accomplishments for this grant. Please refer to this document as it includes important information and forms for accessing DRGR, as well as other information concerning reporting requirements.

2) **FY2023 CPF Grant Agreement for this Award**: The FY2023 CPF Grant Agreement specifies the applicable statutory provisions, regulations, and administrative requirements for this award. Please read this FY2023 CPF Grant Agreement carefully, including its incorporated appendices, which contain additional mandatory award terms as well as information specific to your award, such as your organization's indirect cost information. Please make sure all grantee information and award-specific information is entered completely and accurately before signing this Agreement. The grantee's Authorized Representative, or legal signatory, must sign and date the FY2023 CPF Grant Agreement. Please retain a "copy" (either electronic and/or printed) of the signed and dated document for your records pending receipt of the countersigned copy from HUD. Please also note that to ensure the Project Narrative and Approved Budget (Appendices 1 and 2) reflect the project and budget as approved by HUD at the time of grant execution, Appendices 1 and 2 will be added by HUD on the date that HUD signs the FY2023 CPF Grant Agreement as stated in Article III, sections A and B of the FY2023 CPF Grant Agreement.

3) **Standard Forms and Required Materials:**

   a. Form HUD-1044, Assistance Award/Amendment Form (Attached)
   b. Standard Form–424 Application for Federal Assistance: https://www.hudexchange.info/resource/306/hud-form-sf424/
   c. SF-424-B, Assurances for Non construction Programs, or SF-424-D, Assurances for Construction Programs: https://www.grants.gov/forms/sf-424-family.html
   d. SFLLL Disclosure of Lobbying Activities (as applicable): https://www.hudexchange.info/resource/308/hud-form-sflll/
   e. SF-1199A - Direct Deposit Sign-Up Form: https://www.hud.gov/sites/documents/attachmentvisf-1199A.PDF

Evidence of the American Bankers Association (ABA) number for your depository account, such as a VOIDED blank check, a deposit slip, or similar documentation. The SF1199A form is used to collect the information necessary to establish an account for the grantee in HUD's financial system. The form is to be completed by the grantee and grantee's financial institution.

Grant Award Process Overview

Below is a step-by-step walk-through of the process and necessary documents and forms to execute your FY2023 Grant Agreement. This process and the forms are also available in the FY2023 CPF Grant Guide, which can also be found on the program's webpage at: https://www.hud.gov/program_offices/comm_planning/edi-grants.

Grant Award Process

1) HUD will email a Grant Award Package including:
    a. FY2023 Grant Award Letter (this letter)
    b. FY2023 CPF Grant Guide
    c. FY2023 CPF Grant Agreement
    d. Links to Standard Forms (see list above in number 3)
2) Grantee should review the Grant Award Package documents and send HUD the following:
    a. Signed and dated FY2023 CPF Grant Agreement
    b. Completed Standard Forms
    c. Detailed Project Narrative: The detailed project narrative should:
        i. capture the maximum anticipated scope of the proposal, not just a single activity that the CPF grant is going toward; and
        ii. include all contemplated actions that are part of the project.
    d. Line-Item Project Budget: The line-item budget should:
        i. capture the maximum anticipated scope of the proposal including the use of the FY23 CPF grant funds in context of the full project budget; and
        ii. include all contemplated actions that are part of the project, not just a single activity that the CPF grant is going toward.
3) Grantee should initiate or complete a Federal environmental review: If the grantee has not yet done so, they should initiate an environmental review, as applicable.
4) HUD reviews returned Grant Award Package for completeness: Once HUD receives a completed grant award package, HUD will review the project narrative and budget, standard forms, grantee-signed and dated FY2023 CPF Grant Agreement.
    a. If complete, HUD will execute the FY2023 CPF Grant Agreement.
    b. If information is missing, HUD will work with grantee to finalize the Grant Award Package.
5) Payment Process: Once the Grant Agreement is executed by the Grantee and HUD, HUD will assist the grantee in getting set up in HUD's financial system. Once set up in HUD's financial system, grantees will submit payment requests.

To assist you with understanding the materials that you have received, HUD will host a series of webinars and "office hours" starting the week of March 6, 2023, to review the

requirements and support grantees through the grant award process and beyond. HUD will send reminder emails prior to each session with the registration link.

Overview of the FY2023 Act

CPF grants are subject to several Federal requirements. HUD will provide additional information and further clarification regarding applicable requirements and the grant award process in upcoming webinars and additional technical assistance. The most essential requirements include:

- **Administrative Requirements:** CPF grants are subject to the Uniform Administrative Requirements, Cost Principles, and Audit Requirements for Federal Awards at 2 CFR Part 200.
- **Environmental Review Requirements:** CPF grants, like all projects funded by HUD, are subject to requirements under the National Environmental Policy Act (NEPA), HUD's NEPA-implementing regulations at 24 CFR Part 50 or 24 CFR Part 58, and all appropriate federal environmental and historic preservation laws, regulations, and Executive Orders.
    - In keeping with the National Environmental Policy Act (NEPA) and HUD's NEPA-implementing regulations at 24 CFR Part 50 or 24 CFR Part 58, **environmental reviews must be completed, and a Request for Release of Funds and Certification must be approved by HUD, as applicable, for all projects prior to taking any 'choice limiting actions.'**[1]
    - Environmental reviews must be completed before a grantee can undertake actions that prevent the grantee from taking an alternative action to minimize or avoid environmental harm, or that would have an adverse environmental impact ("choice limiting actions"). This step is required to avoid violations under 24 CFR 58.22 which provides limitations on activities pending clearance, and Section 110(k) of the National Historic Preservation Act which prohibits anticipatory demolition or significant harm of cultural and/or historic resources prior to completion of the historic preservation review process known as Section 106 review.
    - HUD defines the "Federal Nexus" for a program or project as the event that triggers the requirements for federal environmental review under a host of laws, regulations, and Executive Orders, including the prohibition on choice limiting actions.
- To be eligible, expenses must comply with applicable Federal requirements. This includes administrative requirements under 2 CFR Part 200, environmental laws, statutes and Executive Orders, and other "cross-cutting" federal requirements adhered to by HUD. In addition, environmental reviews are required for all HUD funded programs and project activities. This includes soft costs as well as hard costs.
- For FY2023 grants, the date of the FY 2023 Act's enactment (December 29, 2022) is the date of eligibility for reimbursement for hard and soft costs and the date of the federal nexus

[1] Choice limiting actions constitute work, such as entering construction contract agreements/commitments and earth-moving activities/clearing/grubbing as well as building renovation/upgrades, that can have an adverse impact on cultural and / or historical resources or the environment, or prevent the avoidance, minimization, or mitigation of those impacts.
Examples of 'choice limiting actions' include, but are not limited to, purchasing land, entering into contracts for property acquisition or construction, or physical work on the project.

for compliance with all environmental laws. Therefore, reimbursable/eligible hard costs can be incurred after enactment once a full environmental review is completed.

- HUD conducted a nationwide environmental review to clear activities such as administrative, planning, and operations and maintenance costs (including costs to prepare an environmental review).
    - After execution of the FY2023 CPF Grant Agreement, these soft costs may be reimbursed if incurred after December 29, 2022, and the costs would otherwise meet the allowability criteria in 2 CFR 200.403.
    - Hard costs can be reimbursed if incurred after a full environmental review is completed and the costs would otherwise meet the allowability criteria in 2 CFR 200.403.

Further explanation and guidance on choice limiting actions and the environmental review process, including historic preservation review, is included within the FY2023 CPF Grant Guide and on the program's webpage.

All information required for your grant award should be submitted via email to the dedicated mailbox at CPFGrants@hud.gov. In transmitting your information, please copy and paste the bolded information as the subject line of your email: **<Grant Number>: <Grantee Name>: Submission of Required Grant Materials**.

If you, or your staff, have any questions regarding how to complete or submit the required documents or about your grant in general, please feel free to contact Njeri Santana-Carter , in CGD at CPFGrants@hud.gov. Please note while your grant officer may change over time, we have a team approach to managing your project. Njeri Santana-Carter is the primary point of contact at HUD for this award and will be available to assist you. Include your grant number and grant name in all email correspondence.

We look forward to working with you on this important project!

Sincerely,

Robin J. Keegan
Deputy Assistant Secretary
Economic Development

ATTACHMENTS:
FY2023 Community Project Funding Grant Guide (Version 1)
FY2023 CPF Grant Agreement
Form HUD-1044 – Assistance Award/Amendment Form

Attachment 05

2019 277174

FILED
Oct 18 2019

Dean C. Logan, Registrar – Recorder/County Clerk

Electronically signed by LAKEISHA MCCOY

CITY OF LOS ANGELES
OFFICE OF THE CITY CLERK
ROOM 395, CITY HALL
LOS ANGELES, CALIFORNIA 90012
CALIFORNIA ENVIRONMENTAL QUALITY ACT

NOTICE OF EXEMPTION

(Articles II and III – City CEQA Guidelines)

CITY CLERK'S USE
DOCUMENT FILED
City Clerk's Office
No. NE-19-271-RP
Certified by CJ
Date: 10/16/19

Submission of this form is optional. The form shall be filed with the County Clerk, 12400 E. Imperial Highway, Norwalk, California, 90650, pursuant to Public Resources Code Section 21152(b). Pursuant to Public Resources Code Section 21167(d), the filing of this notice starts a 35-day statute of limitations on court challenges to the approval of the project.

LEAD CITY AGENCY AND ADDRESS: Environmental Management Group
Los Angeles City Engineer
1149 S. Broadway, MS 939
Los Angeles, CA 90015

COUNCIL DISTRICT
2

PROJECT TITLE: Studio City Recreation Center - Gymnasium
W.O. E170267D

LOG REFERENCE

PROJECT LOCATION: T.G. 562 E4 & F4
12621 Rye Street, Studio City, CA 91604

DESCRIPTION OF NATURE, PURPOSE, AND BENEFICIARIES OF PROJECT:
The project includes the reconstruction of an existing recreation center building. The scope includes the demolition of an existing recreation center building and the construction of a new modern LEED structure. The proposed modern structure will consist of a 12,000-square-foot building with a full size basketball court, multipurpose rooms, recreation center office, kitchen, restrooms and support facilities. The project scope also includes security lighting, a parking area, landscaping and irrigation. The beneficiaries of the project include the local community and all users of the park.

CONTACT PERSON
Eileen Schoetzow

TELEPHONE NUMBER
213-485-5751

EXEMPT STATUS: (Check One)

	CITY CEQA GUIDELINES	STATE CEQA GUIDELINES
☐ MINISTERIAL	Art. II, Sec. 2.b	Sec. 15268
☐ DECLARED EMERGENCY	Art. II, Sec. 2.a(1)	Sec. 15269(a)
☐ EMERGENCY PROJECT	Art. II, Sec. 2.a(2)(3)	Sec. 15269(b)(c)
☐ GENERAL EXEMPTION	Art. II, Sec. 1	Sec. 15061(b)(3)
☒ CATEGORICAL EXEMPTION*	Art. III, Sec. 1 Class 3 Cat. 17 Art. III, Sec. 1 Class 2 Cat. 2	Sec. 15303 *et sec* Sec. 15302(b)
☐ STATUTORY*	Art. _____	Sec. _____

* See Public Resources Code Sec. 21080 and set forth state and city guidelines provisions.

THIS NOTICE WAS POSTED ON October 18 2019 UNTIL November 18 2019
REGISTRAR – RECORDER/COUNTY CLERK

JUSTIFICATION FOR PROJECT EXEMPTION: Class 2 consists of the reconstruction of existing structures and facilities where the new structure will be located on the same site as the structure replaced and will have substantially the same purpose and capacity as the structure replaced. Class 3 consists of construction of limited numbers of new, small facilities or structures, installation of small new equipment and facilities in small structures. The project includes the reconstruction of an existing recreation center and its accessory uses. The proposed modern structure will consist of a 12,000-square-foot building with accessory recreational uses located on the same site as the structure replaced and will have substantially the same purpose and capacity as the structure replaced. None of the limitations set forth in State CEQA Guidelines 15300.2 apply (see attached narrative).

IF FILED BY APPLICANT, ATTACH CERTIFIED DOCUMENT OF EXEMPTION FINDING

SIGNATURE:	TITLE:	DATE:
ME Martin Maria Martin	Environmental Affairs Officer Environmental Management Group	12/19/17

FEE: $75.00	RECEIPT NO.	REC'D BY	DATE

DISTRIBUTION: (1) County Clerk (2) City Clerk (3) Agency Record

CATEGORICAL EXEMPTION NARRATIVE

I. PROJECT HISTORY

The Studio City Recreation Center (The Center) is located in the South Valley neighborhood of Studio City that is within the Sherman Oaks-Studio City-Toluca Lake-Cahuenga Pass community planning area of the City of Los Angeles. Currently, there is an existing recreation center facility and accessory uses that offer sports programs, community education classes, event space and various playground uses. The Center is surrounded by residential uses, mostly single family homes.

II. ENVIRONMENTAL REVIEW

Basis for Categorical Exemption

CEQA Article III, Section 1, Class 2, Category 2 consists of the reconstruction of existing structures and facilities where the new structure will be located on the same site as the structure replaced and will have substantially the same purpose and capacity as the structure replaced. *CEQA Article III, Section 1,Class 3, Category 17* consists of construction of limited numbers of new, small facilities or structures, installation of small new equipment and facilities in small structures. The project includes the reconstruction of an existing recreation center and its accessory uses. The proposed modern structure will consist of a 12,000-square-foot building with a full size basketball court, multipurpose rooms, recreation center office, kitchen, restrooms and support facilities. The project scope also includes security lighting, a parking area, landscaping and irrigation. The new structure will be located on the same site as the structure replaced and will have substantially the same purpose and capacity as the structure replaced.

Consideration of Potential Exceptions to use of a Categorical Exemption

The State CEQA Guidelines (CCR Sec 15300.2) limit the use of categorical exemptions in the following circumstances:

1. Location. Exemption Classes 3, 4, 5, 6, and 11 are qualified by consideration of where the project is to be located – a project that is ordinarily insignificant in its impact on the environment may be significant in a particularly sensitive environment. Therefore, these classes are considered to apply all instances, except where the project may impact on an environmental resource of hazardous or critical concern where designated, precisely mapped, and officially adopted pursuant to law by federal, state, or local agencies.

The project is exempt under Classes 2 (Replacement or Reconstruction) and 3 (New Construction of Small Structures). The new recreation center structure and accessory uses will be located on the same site and general location as the structure and accessory uses replaced and will have substantially the same purpose and capacity as the structure and accessory uses replaced. The project site is not located an area mapped or designated to contain environmental resources of hazardous or critical concern as described above. Therefore, this exception has no application here.

2. Cumulative Impact. This exception applies when, although a particular project may not have a significant impact, the cumulative impact of successive projects of the same type in the same place, over time is significant. There are no other known projects of the same type and in the same place that could involve cumulatively significant impacts. Therefore, this exception has no application here.

3. Significant Effect. This exception applies when, although the project may otherwise be exempt, there is a reasonable possibility that the project will have a significant effect due to unusual circumstances. There are no unusual circumstances known to this office. Therefore, this exception has no application here.

2019 277174

FILED
Oct 18 2019

Dean C. Logan, Registrar – Recorder/County Clerk

Electronically signed by LAKEISHA MCCOY

4. Scenic Highway. A categorical exemption shall not be used for a project which may result in damage to scenic resources, including but not limited to, trees, historic buildings, rock outcroppings, or similar resources, within a highway officially designated as a state scenic highway. The proposed project is not within sight of any state designated scenic highway. Therefore, this exception has no application here.

5. Hazardous Waste Site. This exception applies when a project is located on a site listed as a hazardous waste site under Government Code Section 65962.5. As of October 20, 2017, the project site was not on any such list. Therefore, this exception has no application here.

6. Historical Resources. This exception applies when a project may cause a substantial adverse change in the significance of a historical resource.

A Historic Resources Assessment[1] of the property dated October 20, 2017, found that the property is not eligible for listing in the California Register of Historical Resources, or for designation as a Los Angeles Historic-Cultural Monument. Additionally, an Archaeological Survey Report[2] for the property dated October 20, 2017, found that the project area did not reveal any known archaeological resources within a half mile. No evidence of archaeologist deposits or features was observed. Therefore, no historical resource is involved in the proposed project so this exception has no application here.

Attachments

Historic Resources Assessment, by Historic Resources Group, 2017

Archaeological Survey Report, by Foster, John M. RPA of Greenwood and Associates 2017

2019 277174

FILED
Oct 18 2019

Dean C. Logan, Registrar – Recorder/County Clerk

Electronically signed by LAKEISHA MCCOY

[1] Historic Resources Group. (2017). *Historic Resources Assessment Studio City Recreation Center Gym.*
[2] Foster, John M. RPA, Greenwood and Associates. (2017). *Archaeological Investigation, Studio City Recreational Center Gym EMGS-025.*

Attachment 05

--- REPRINT---

Dean C. Logan
Los Angeles County Registrar / Recorder
12400 Imperial Highway, Norwalk, CA
(800)201-8999

BUSINESS FILINGS REGISTRATION

NORWALK DEPARTMENT HEADQUARTER

Cashier: L. MCCOY

20191018048000 3

Friday, October 18, 2019 10:17 AM

Item(s)

Fee	Qty	Total
NoE - County Posting Fee 2019277169	1	$75.00
NoE - County Posting Fee 2019277170	1	$75.00
NoE - County Posting Fee 2019277171	1	$75.00
NoE - County Posting Fee 2019277172	1	$75.00
NoE - County Posting Fee 2019277173	1	$75.00
NoE - County Posting Fee 2019277174	1	$75.00
NoE - County Posting Fee 2019277175	1	$75.00
NoE - County Posting Fee 2019277176	1	$75.00
NoE - County Posting Fee 2019277177	1	$75.00
NoE - County Posting Fee 2019277178	1	$75.00
NoE - County Posting Fee 2019277179	1	$75.00
NoE - County Posting Fee 2019277180	1	$75.00
NoE - County Posting Fee 2019277181	1	$75.00
NoE - County Posting Fee 2019277182	1	$75.00
NoE - County Posting Fee 2019277183	1	$75.00
NoE - County Posting Fee 2019277184	1	$75.00
NoE - County Posting Fee 2019277192	1	$75.00
NoE - County Posting Fee 2019277193	1	$75.00
NoE - County Posting Fee 2019277194	1	$75.00
NoE - County Posting Fee 2019277195	1	$75.00
NoE - County Posting Fee 2019277196	1	$75.00
NoE - County Posting Fee 2019277197	1	$75.00
Total		**$1,650.00**

Total Documents: 22

Customer payment(s):

Check $1,650.00

Check List:
#300997731 $1,650.00

--- REPRINT---

Attachment 05

COUNTY CLERK'S USE

CITY OF LOS ANGELES
OFFICE OF THE CITY CLERK
ROOM 395, CITY HALL
LOS ANGELES, CALIFORNIA 90012
CALIFORNIA ENVIRONMENTAL QUALITY ACT

NOTICE OF EXEMPTION

(Articles II and III – City CEQA Guidelines)

CITY CLERK'S USE

DOCUMENT FILED
City Clerk's Office
No. ENV-2019-2271-EAF
Certified by CB
Date: 10/10/19

ORIGINAL FILED
OCT 18 2019
LOS ANGELES COUNTY CLERK

Submission of this form is optional. The form shall be filed with the County Clerk, 12400 E. Imperial Highway, Norwalk, California, 90650, pursuant to Public Resources Code Section 21167(d), the filing of this notice starts a 35-day statute of limitations on court challenges to the approval of the project.

LEAD CITY AGENCY AND ADDRESS: Environmental Management Group Los Angeles City Engineer 1149 S. Broadway, MS 939 Los Angeles, CA 90015	**COUNCIL DISTRICT** 2
PROJECT TITLE: Studio City Recreation Center - Gymnasium W.O. E170267D	**LOG REFERENCE**
PROJECT LOCATION: 12621 Rye Street, Studio City, CA 91604	T.G. 562 E4 & F4

DESCRIPTION OF NATURE, PURPOSE, AND BENEFICIARIES OF PROJECT:

The project includes the reconstruction of an existing recreation center building. The scope includes the demolition of an existing recreation center building and the construction of a new modern LEED structure. The proposed modern structure will consist of a 12,000-square-foot building with a full size basketball court, multipurpose rooms, recreation center office, kitchen, restrooms and support facilities. The project scope also includes security lighting, a parking area, landscaping and irrigation. The beneficiaries of the project include the local community and all users of the park.

CONTACT PERSON	**TELEPHONE NUMBER**
Eileen Schoetzow	213-485-5751

EXEMPT STATUS: (Check One)

	CITY CEQA GUIDELINES	STATE CEQA GUIDELINES
☐ MINISTERIAL	Art. II, Sec. 2.b	Sec. 15268
☐ DECLARED EMERGENCY	Art. II, Sec. 2.a(1)	Sec. 15269(a)
☐ EMERGENCY PROJECT	Art. II, Sec. 2.a(2)(3)	Sec. 15269(b)(c)
☐ GENERAL EXEMPTION	Art. II, Sec. 1	Sec. 15061(b)(3)
☒ CATEGORICAL EXEMPTION*	Art. III, Sec. 1 Class 3 Cat. 17	Sec. 15303 *et sec*
	Art. III, Sec. 1 Class 2 Cat. 2	Sec. 15302(b)
☐ STATUTORY*	Art. _____	Sec. _____

* See Public Resources Code Sec. 21080 and set forth state and city guidelines provisions.

JUSTIFICATION FOR PROJECT EXEMPTION: Class 2 consists of the reconstruction of existing structures and facilities where the new structure will be located on the same site as the structure replaced and will have substantially the same purpose and capacity as the structure replaced. Class 3 consists of construction of limited numbers of new, small facilities or structures, installation of small new equipment and facilities in small structures. The project includes the reconstruction of an existing recreation center and its accessory uses. The proposed modern structure will consist of a 12,000-square-foot building with accessory recreational uses located on the same site as the structure replaced and will have substantially the same purpose and capacity as the structure replaced. None of the limitations set forth in State CEQA Guidelines 15300.2 apply (see attached narrative).

IF FILED BY APPLICANT, ATTACH CERTIFIED DOCUMENT OF EXEMPTION FINDING

SIGNATURE:	TITLE:	DATE:
M E Martin Maria Martin	Environmental Affairs Officer Environmental Management Group	12/19/17

FEE: $75.00	RECEIPT NO.	REC'D BY	DATE

DISTRIBUTION: (1) County Clerk (2) City Clerk (3) Agency Record

CATEGORICAL EXEMPTION NARRATIVE

I. PROJECT HISTORY

The Studio City Recreation Center (The Center) is located in the South Valley neighborhood of Studio City that is within the Sherman Oaks-Studio City-Toluca Lake-Cahuenga Pass community planning area of the City of Los Angeles. Currently, there is an existing recreation center facility and accessory uses that offer sports programs, community education classes, event space and various playground uses. The Center is surrounded by residential uses, mostly single family homes.

II. ENVIRONMENTAL REVIEW

Basis for Categorical Exemption

CEQA Article III, Section 1, Class 2, Category 2 consists of the reconstruction of existing structures and facilities where the new structure will be located on the same site as the structure replaced and will have substantially the same purpose and capacity as the structure replaced. *CEQA Article III, Section 1,Class 3, Category 17* consists of construction of limited numbers of new, small facilities or structures, installation of small new equipment and facilities in small structures. The project includes the reconstruction of an existing recreation center and its accessory uses. The proposed modern structure will consist of a 12,000-square-foot building with a full size basketball court, multipurpose rooms, recreation center office, kitchen, restrooms and support facilities. The project scope also includes security lighting, a parking area, landscaping and irrigation. The new structure will be located on the same site as the structure replaced and will have substantially the same purpose and capacity as the structure replaced.

Consideration of Potential Exceptions to use of a Categorical Exemption

The State CEQA Guidelines (CCR Sec 15300.2) limit the use of categorical exemptions in the following circumstances:

1. Location. Exemption Classes 3, 4, 5, 6, and 11 are qualified by consideration of where the project is to be located – a project that is ordinarily insignificant in its impact on the environment may be significant in a particularly sensitive environment. Therefore, these classes are considered to apply all instances, except where the project may impact on an environmental resource of hazardous or critical concern where designated, precisely mapped, and officially adopted pursuant to law by federal, state, or local agencies.

The project is exempt under Classes 2 (Replacement or Reconstruction) and 3 (New Construction of Small Structures). The new recreation center structure and accessory uses will be located on the same site and general location as the structure and accessory uses replaced and will have substantially the same purpose and capacity as the structure and accessory uses replaced. The project site is not located an area mapped or designated to contain environmental resources of hazardous or critical concern as described above. Therefore, this exception has no application here.

2. Cumulative Impact. This exception applies when, although a particular project may not have a significant impact, the cumulative impact of successive projects of the same type in the same place, over time is significant. There are no other known projects of the same type and in the same place that could involve cumulatively significant impacts. Therefore, this exception has no application here.

3. Significant Effect. This exception applies when, although the project may otherwise be exempt, there is a reasonable possibility that the project will have a significant effect due to unusual circumstances. There are no unusual circumstances known to this office. Therefore, this exception has no application here.

4. Scenic Highway. A categorical exemption shall not be used for a project which may result in damage to scenic resources, including but not limited to, trees, historic buildings, rock outcroppings, or similar resources, within a highway officially designated as a state scenic highway. The proposed project is not within sight of any state designated scenic highway. Therefore, this exception has no application here.

5. Hazardous Waste Site. This exception applies when a project is located on a site listed as a hazardous waste site under Government Code Section 65962.5. As of October 20, 2017, the project site was not on any such list. Therefore, this exception has no application here.

6. Historical Resources. This exception applies when a project may cause a substantial adverse change in the significance of a historical resource.

A Historic Resources Assessment[1] of the property dated October 20, 2017, found that the property is not eligible for listing in the California Register of Historical Resources, or for designation as a Los Angeles Historic-Cultural Monument. Additionally, an Archaeological Survey Report[2] for the property dated October 20, 2017, found that the project area did not reveal any known archaeological resources within a half mile. No evidence of archaeologist deposits or features was observed. Therefore, no historical resource is involved in the proposed project so this exception has no application here.

Attachments

Historic Resources Assessment, by Historic Resources Group, 2017

Archaeological Survey Report, by Foster, John M. RPA of Greenwood and Associates 2017

[1] Historic Resources Group. (2017). *Historic Resources Assessment Studio City Recreation Center Gym.*
[2] Foster, John M. RPA, Greenwood and Associates. (2017). *Archaeological Investigation, Studio City Recreational Center Gym EMGS-025.*

Attachment 06
FORM GEN. 160 (Rev. 11-02)

CITY OF LOS ANGELES
INTERDEPARTMENTAL CORRESPONDENCE

DATE: JULY 27, 2023

TO: SHUN YU ZHANG, P.E., M.S., CIVIL ENGINEER
BUREAU OF ENGINEERING, ARCHITECTURAL DIVISION

CC: ANN ZALD, ENVIRONMENTAL SUPERVISOR
COMMUNITY INVESTMENT FOR FAMILIES DEPARTMENT
EILEEN SCHOETZOW, BUREAU OF ENGINEERING
NICK INCARDONA, DEPARTMENT OF RECREATION AND PARKS
ELENA MAGGIONI, DEPARTMENT OF RECREATION AND PARKS

FROM: MARIA MARTIN, ENVIRONMENTAL AFFAIRS OFFICER
BUREAU OF ENGINEERING, ENVIRONMENTAL MANAGEMENT GROUP

SUBJECT: STUDIO CITY RECREATION CENTER, 12621 RYE ST. STUDIO CITY, CA 91604 – CONDITIONAL ENVIRONMENTAL CLEARANCE MEMO

The Environmental Management Group (EMG) conducted an environmental review under National Environmental Policy Act (NEPA) guidelines for the Studio City/Beeman Recreational Center Capital Improvement Project (a.k.a. the Studio City Recreation Center), located at 12621 Rye St. Studio City, CA 91604, as a condition of Community Project Funding (CPF). It is the responsibility of the Bureau of Engineering (BOE), to guarantee that all conditions of this conditional environmental clearance memo are performed. The following findings were made.

1. Our review concluded that, following a number of "condition of approval" mitigations, the project would not result in a significant impact on the human environment or to historical resources. Unless otherwise specified below, the following conditions must be met before our group authorizes the commencement of demolition and construction.

   a. **Mitigation #1 - Historic Preservation:** ICF, the historic preservation consultant for the City of Los Angeles, conducted a review of the undertaking of the subject project under Section 106 of the National Historic Preservation Act (NHPA). An archaeological Records Search, field survey, and survey report was previously conducted by John M. Foster, RPA of Greenwood and Associates in December 2017 to identify any archaeological resources within the proposed impact areas. The study included a review of available literature, archaeological site archives, and relevant historical maps at the South Central Coastal Information Center by Dana Slawson, staff researcher with Greenwood and Associates. The records search for the project area did not reveal any known archaeological resources within a half mile while the field survey showed no evidence of archaeological deposits or features. However, if potentially important cultural deposits are encountered during construction, work should be temporarily halted in the vicinity of the discovery until a qualified archaeologist can identify and evaluate the importance of the find, conduct any appropriate assessment, and implement measures to mitigate impacts on significant resources.

      As a mitigation measure, a halt-work condition is in place when and if any

archaeological materials, paleontological materials or human remains are encountered during excavating activities. If human remains are discovered in soils of any kind, the Los Angeles County Coroner's Office must be notified immediately under state law (California Health and Safety Code 7050.5; Public Resources Code 5097.9), and all activities in that area must cease until lawful measures have been implemented. If the Coroner determines that the remains are Native American, the NAHC in Sacramento must also be contacted under state law. The NAHC will designate a Most Likely Descendent (MLD) who will have the authority to make procedural determinations, in consultation with the landowner, concerning the appropriate disposition of the remains. A halt-work condition shall be in place when and if any archaeological materials, paleontological materials or human remains are encountered during excavating activities.

b. **Mitigation #2 - Contamination and Toxic Substances:** Ambient Environmental Inc. completed an Asbestos/Lead Sampling Report in October 2019, which was provided to Dudek during the completion of their Phase I ESA report. The report documents a survey conducted for the Studio City Recreation Center building materials and/or components (interior and exterior) to measure levels of asbestos and lead. The subject property building was constructed in the 1950s, based on historical sources.

   For asbestos, a visual inspection was conducted, and bulk samples were taken from each accessible homogeneous building material. A visual inspection for lead was also conducted, followed by sampling of suspect painted/coated building components that were accessible. Detectable levels of asbestos above 0.1% asbestos were detected in the building's window putty. Levels of lead in excess of 600 parts per million were detected in the building exterior windows, exterior window fascia board, and interior kitchen door and frame. These results verify the location of both lead and asbestos containing building materials at the Studio City Recreation Center; however, additional areas outside this report scope of work could become evident during construction operations. Based on disposal information presented in the database listings, it is likely that the materials were abated in 2000. In the event that the materials were not abated, materials should be abated by a licensed abatement contractor prior to demolition.

   ASBESTOS

   Any identified asbestos-containing materials must be removed by a licensed and certified asbestos abatement contractor prior to renovations or demolition pursuant to Rule 1403 of the South Coast Air Quality Management District and Cal-OSHA Asbestos Regulations if they are going to be disturbed.

   Notwithstanding the above, asbestos-containing packings, gaskets, resilient floor covering, and asphalt roofing products which are not friable and are not crumbled, cut, abraded, or otherwise not damaged and in good condition, may be removed after the start of renovation or non-burning demolition activities if prior approval from the District is obtained (Procedure 5).

   Cal-OSHA's employee protection requirements for materials in excess of 1% asbestos prohibit unrestricted demolition and require personal protective equipment (PPE), training, and special equipment during abatement.

   Asbestos abatement activities must be conducted in compliance with all applicable regulations, standards and generally accepted environmental and safety practices, including Federal OSHA (29 CFR 1926.58), EPA NESHAPS (40 CFR Part 61), and Toxic Substances Control Act (TSCA) Title II AHERA/ASHARA (40 CFR Part 763)

Asbestos Regulations, the Occupational Safety and Health Administration, Asbestos Construction Standard, 29 CFR 1926.1101, and Title 8, California Code of Regulations Section 1529, Cal-OSHA Construction Standard.

LEAD

Any defective lead-based paints identified at the Site should be stabilized or removed by lead-certified personnel following lead-safe work practices to facilitate lead-safe demolition or renovation. An environmental contractor with California Department of Public Health (CDPH) certified workers should be retained to carry out the work in compliance with the regulations that govern lead-containing paints.

The U.S. Department of Housing and Urban Development (HUD) and the U.S. Environmental Protection Agency (EPA) define an inspection as a surface-by-surface investigation to determine the presence of lead-based paint (see 40 CFR part 745 and Title X of the 1992 Housing and Community Development Act). Common renovation activities like sanding, cutting, and demolition can create hazardous lead dust and chips by disturbing lead-based paint, which can be harmful to adults and children. To protect against this risk, on April 22, 2008, EPA issued a rule requiring the use of lead-safe practices and other actions aimed at preventing lead poisoning. Under the rule, beginning April 22, 2010, contractors performing renovation, repair and painting projects that disturb lead-based paint in homes, child care facilities, and schools built before 1978 must be certified and must follow specific work practices to prevent lead contamination.

c. **Mitigation #3 - Geotechnical Design and Construction:** The project proponent will comply with all design recommendations prepared by AECOM/City of Los Angeles GeoTech Division's (GEO) Preliminary Geotechnical Engineering Report for the Studio City Recreation Center. This geotechnical investigation included field exploration, laboratory testing, and infiltration testing. AECOM, performed the field exploration and laboratory testing for GEO. The Department of General Services, Standards Division (Standards) performed infiltration testing for GEO.

   Based on the results of the investigation, the proposed project is considered geotechnically feasible with the following mitigation measures incorporated into the design and construction.

   The primary important design factor for this project is the potential for liquefaction. To mitigate the effects of liquefaction it is required to support the new gym and community center on a structural mat. Foundation requirements are provided below. In addition, the earthwork mitigation measures are also expected to mitigate the effects of liquefaction, including a potential punching failure.

   EARTHWORK

   All earthwork should be performed in accordance with the geotechnical recommendations presented in the AECOM/GEO report and the Los Angeles Department of Building and Safety (LADBS) Grading Division requirements. Furthermore, all earthwork should be performed under the observation and testing of a qualified Geotechnical Engineer.

Site Preparation

Site preparation will initially involve the demolition of the existing recreation center, parking lot, and any existing foundations within the construction area. Following demolition, the construction area should be cleared of any vegetation and stripped of miscellaneous debris and other deleterious material. Organic matter and other material that may interfere with the completion of the work should be removed from the limits of the construction area.

Vegetation and organic matter should not be incorporated into the compacted fill. Organic rich soil, if present, may be stockpiled for future landscaping. If structures are constructed in areas that are currently occupied by trees, the trees and their root balls should be removed. Voids resulting from the demolition and/or tree removal shall be backfilled with properly compacted fill. These materials shall be removed from the construction area and hauled to a proper disposal area.

Any utilities, whether active or inactive, shall be identified and properly abandoned or relocated per project plans and specifications. Any depressions resulting from removal of any existing foundations or utility lines shall be properly backfilled and compacted in accordance with the recommendations in the following sections.

Over-Excavation and Subgrade Preparation

Over-excavation is required beneath structural mat foundations, new pavements, site walls, and exterior concrete slabs. Following over-excavation in these areas, the exposed subgrade (i.e. excavation bottom) beneath structural mats shall be scarified eight (8) inches, moisture conditioned and compacted to at least 95 percent RC. The exposed subgrade beneath pavements, site walls, and exterior slabs shall be scarified six (6) inches, moisture conditioned, and compacted to at least 90 percent RC.

The existing soil in the upper five (5) feet within the footprint of the structural mat shall be removed. The excavation should extend three (3) feet laterally beyond the edges of the thickened edge. The excavation bottom shall be approved by a representative of GEO and the LADBS Grading Inspector prior to fill placement. The soil beneath new pavements and site walls up to 8-feet high shall be excavated to a depth of eighteen (18) inches below existing grade or design subgrade elevation, whichever is deeper.

The excavation shall extend laterally beyond the edges of the slab or footings a minimum distance of two (2) feet. For new site walls, the over-excavation and re-compaction shall result in at least one (1) foot of compacted fill beneath the footings. For new pavements, the over-excavation and re-compaction shall result in at least one (1) foot of compacted subgrade beneath the pavement section, which includes the aggregate base and asphalt. The soil beneath new flatwork (i.e. exterior concrete slabs) should be over excavated to a depth of twelve (12) inches below subgrade elevation. The excavation should extend laterally beyond the edges of the slab a minimum distance of twelve (12) inches.

Temporary Excavations

Based on our observations during subsurface investigation and results of laboratory tests, the materials at the site should be readily excavated by conventional earthmoving equipment in good operating condition. All temporary excavations shall conform to the State of California Construction Safety Orders (CAL/OSHA).

Unsurcharged, temporary vertical excavations shall not exceed four (4) feet. Unsurcharged excavations greater than four (4) feet and to a maximum of six (6) feet shall be sloped at a 1:1 (H:V) or flatter inclination from the ground surface to the bottom of the excavation. If deeper excavations are proposed, they shall be submitted by the applicant to GEO for their review and supplemental recommendations may be required.

Fill Materials and Backfill Placement

Fill materials shall consist of the onsite soils or approved import soil. Import soil shall be predominantly granular (minimum 80% passing number 4 sieve and 35% or less passing the number 200 sieve), non-expansive (EI less than 20), and shall be free of organic or inorganic debris, contamination and materials with any dimension larger than three (3) inches.

Proposed import soil shall be submitted by the applicant to GEO for their review reviewed by GEO for approval prior to delivery to the job site. GEO shall be notified a minimum of three (3) working days prior to scheduled importing of soil to the project site. Fill material shall be placed in loose lifts not exceeding eight (8) inches in thickness, moisture-conditioned to within 3% above the optimum moisture content and mechanically compacted. Clayey soils (i.e. those with 15% or more finer than 0.005 mm sieve) placed in building areas shall be compacted to a minimum 90% RC, as determined by ASTM Test Method D1557. Non-clayey soils (i.e. those less than 15% finer than 0.005 mm) placed in the building area shall be compacted to a minimum of 95% RC. Secondary or non-structural fill shall be compacted to a minimum of 90% RC. Any aggregate base should be moisture conditioned to within three (3) percent above optimum and compacted to a minimum of 95% RC.

Fill placement and compaction shall be observed and tested by a certified compaction testing agency working under the direct supervision of GEO. Compacted fill soils shall be kept moist, (at or slightly above the specified moisture content at the time of compaction) but not flooded, until covered with subsequent construction. If compacted fill soils become softened or disturbed, they shall be replaced or recompacted at the discretion of the Geotechnical Engineer before additional fill or construction is placed. Certification and inspection approvals for compromised soils are void and invalid.

Utility Trench Backfill

Trench excavations for utility pipes may be backfilled with onsite soils under the observation of a representative of GEO. After utility pipes have been laid, properly bedded, and covered per the project specifications, they shall be backfilled to the ground surface or design subgrade with controlled backfill. Controlled backfill shall be moisture conditioned, placed and compacted in accordance with the recommendations presented above (Section 6.2.4). Densification by flooding or jetting is not allowed.

Fill Certification

Upon successful completion of fill placement and compaction, GEO will issue a Compaction Certification for the fill. Unless approved by the Building Inspector during construction, the Contractor shall not pour footings until an approval letter is issued by the Department of Building and Safety, Grading Division for the Compaction

Certification. The contractor may excavate in compacted fill for foundation elements before the fill certification approval letter is issued, but does so at his/her own risk.

STRUCTURAL MAT FOUNDATIONS

Following the site preparation and recommended Earthwork, the new recreation center and gymnasium shall be supported on a structural mat foundation. Foundation design recommendations are provided in the following sections.

Bearing Capacity and Settlement

The structural mat shall be designed using an allowable bearing capacity of twelve thousand (1,200) pounds per square foot (psf). The allowable bearing value applies to combined dead and sustained live loads. A 1/3 increase may be used for short term loading conditions such as wind or seismic forces.

Based on the allowable bearing capacity provided, total static and seismic settlement is anticipated to be less than four (4) inches. Differential settlements are not expected to exceed 1⁄2 of the total settlement. The majority of the static settlement, which is expected to be less than 3⁄4-inch, will likely occur during construction.

Lateral Load Resistance

Lateral load resistance will be developed by passive soil pressure against the thickened edges of the mat and by friction acting along the base of the mat. An allowable passive pressure of two-hundred and seventy-five (275) psf per foot of depth, beginning from one (1) foot below the lowest adjacent grade, may be used for design purposes. An allowable passive pressure of two-hundred and seventy-five (275) psf per foot of depth, beginning from the ground surface, may be used if the foundation is located adjacent to exterior slabs. The allowable passive pressure is only applicable for level (ground slope equal to or flatter than 5:1 (horizontal:vertical) conditions. An allowable coefficient of friction of 0.35 may be used for dead and sustained live loads for frictional resistance of the footings constructed directly on compacted fill. A safety factor of 1.5 has been incorporated in the development of both the allowable passive and frictional resistance values.

The passive pressure and frictional resistance may be increased by 1/3 under seismic and wind loading conditions. The lateral load resistance may combine the passive pressure and frictional resistance; however, the passive resistance may not exceed 1⁄2 of the combined total lateral resistance.

Modulus of Subgrade Reaction

The modulus of subgrade reaction, ks, is not a fundamental soil property, and its magnitude depends on many factors, including the width of loaded area, the shape of loaded area, the depth of the loaded area below grade, the position of mat, and time (Coduto, 2001). The building design and loading conditions have not been finalized; therefore, the ks values should be reviewed once this information is known.

For preliminary design purposes, ks values of one-hundred and fifty (150) to three-hundred (300) pounds per cubic inch (corresponding to the center and edge of the building, respectively) may be used. These values are based on a pseudo-coupled method and elastic theory. The appropriate mitigation measures required by that

analysis will be incorporated into the final design and construction of the proposed project. Furthermore, proper site preparation or design features will guarantee that the project be provided with adequate foundation, removing any hazard to life and property. Potential impacts with regard to liquefaction and landslide potential have been evaluated and the construction of the project must comply with the City of Los Angeles Uniform Building Code. The City of Los Angeles, Department of Building and Safety will review and monitor the required design and construction recommendations.

d. **Mitigation #4 City of Los Angeles Protected Trees:** The City of Los Angeles Protected Tree or Shrub Ordinance, as modified by Ordinance #186873, provides guidelines for the preservation of native Southern California tree or shrub species measuring four (4) inches or more in cumulative trunk diameter at four and half (4.5) feet above the ground from the base of the tree or shrub (City of Los Angeles 2006). Trees or shrubs protected under this ordinance include all oak trees (*Quercus spp*.) indigenous to California (excluding scrub oak [*Quercus dumosa*]), Southern California black walnut (*Juglans californica var. californica*), California sycamore (*Platanus racemosa*), California bay (*Umbellularia californica*), blue (or Mexican) elderberry (*Sambucus nigra ssp.caerulea*; Synonym: *Sambucus mexicana*), and toyon (*Heteromeles arbutifolia*). Two California sycamore that meet the minimum trunk diameter were identified in close proximity to the project site.

The Project proposes to remove eleven (11) existing trees and plant sixty-three (63) new trees. The existing trees proposed to be removed are: four (4) Velvet Ash, two (2) Crape Myrtle, two (2) Southern Magnolia, one (1) Benjamin Fig, one (1) Brisbane Box, and one (1) Holly Oak, which is a non-native unprotected tree per definition of Protected Tree under Ordinance 177404. The new trees proposed to be planted are: eight (8) African Fern Pine, fourteen (14) Desert Willow, eight (8) Australian Willow, nine (9) Eldarica Pine, fourteen (14) Red Push Pistache, two (2) Coast Live Oak, and eight (8) Tipuana. All new trees proposed to be planted are 36-inch box trees and have a projected five (5) year canopy diameter of sixteen (16) feet to twenty (20) feet. Approximately twelve thousand (12,000) square feet of tree canopy is projected to be provided by the new trees after five (5) years, assuming a survival rate of 75 percent.

Approximate location and extent of City-protected shrubs and trees observed on site; however, a survey by a certified arborist would be necessary to determine their actual locations and the project construction boundaries would be needed to determine if the individuals would be removed or encroached upon due to project activities. A tree inventory and arborist report by a certified arborist is required to determine the number, locations, and size of City-protected trees within the project site. The arborist report should determine their actual locations and project construction boundaries that would be needed to determine if the trees would be removed or encroached upon due to project activities. Then provide measures for minimizing impacts and/or tree replacement mitigation if impacts to protected trees cannot be avoided. This report must be obtained prior to any activities that could impact the existing trees; compliance to the arborist's recommendations will be mandatory.

e. **Mitigation #5 Endangered Species:** Certain birds are protected under the Migratory Bird Treaty Act and the Bald and Golden Eagle Protection Act. The birds listed below

are birds of particular concern either because they occur on the USFWS Birds of Conservation Concern (BCC) list or warrant special attention in the Project location.

There are Bald Eagles *(Haliaeetus leucocephalus)* and Golden Eagles *(Aquila chrysaetos)* that are protected under the *Bald and Golden Eagle Protection Act and the Migratory Bird Act*. They are within the Project area, but are not a Bird of Conservation Concern (BCC) in this area. However, they warrant attention because of potential susceptibilities from certain types of development or activities. To protect possible active eagle nests during the breeding season (typically January 1 to August 31), the Project will conduct nesting bird surveys prior to Project activities and establish buffers around active nests to avoid and minimize disturbances to nesting birds.

The following Migratory Birds are protected under the Migratory Bird act and are listed as birds of particular concern either because they occur on the USFWS Birds of Conservation Concern (BCC) list or warrant special attention in the project location. They are as follows:

Allen's Hummingbird (*Selasphorus sasin*), Belding's Savannah Sparrow (*Passerculus sandwichensis beldingi*), Black-chinned Sparrow (*Spizella atrogularis*), Bullock's Oriole (*Icterus bullockii*), California Gull (*Larus californicus*), California Thrasher (*Toxostoma redivivum*), Cassin's Finch (*Carpodacus cassinii*), Clark's Grebe (*Aechmophorus clarkii*), Common Yellowthroat (*Geothlypis trichas sinuosa*), Lawrence's Goldfinch (*Carduelis lawrencei*), Long-eared Owl (*asio otus*), Nuttall's Woodpecker (*Picoides nuttallii*), Oak Titmouse, (*Baeolophus inornatus*), Olive-sided Flycatcher (*Contopus cooperi*), Western Grebe (*aechmophorus occidentalis*), Wrentit (*Chamaea fasciata*).

The study area contains some vegetation that could provide nesting habitat for common birds protected under the Migratory Bird Treaty Act (MBTA) and California Fish and Game Code Sections 3503, 3503.5, and 351. The transmission tower has potential to support nesting birds and the surrounding open areas can support ground nesting species such as killdeer.

To comply with the conditions set forth in the MBTA and California Fish and Game Code to protect active bird nests during the breeding season (typically February 1 to September 30), the project will conduct nesting bird surveys prior to project activities and establish buffers around active nests to avoid and minimize disturbances to nesting birds.

Although there are species that are considered to be endangered and federally listed with FWS, threatened, or candidates to be considered endangered within the Project area, these species are not expected to occur as residents at the Project Site due to the developed conditions and the lack of suitable habitat, soils, and vegetation. As such, no impacts to any type of special-status wildlife are expected by the implementation and operation of the Project.

2. **The above-mentioned mitigation measures shall be incorporated into project contracts to ensure full compliance with all applicable Federal and State environmental guidelines as required. For tracking, monitoring and reporting purposes, the project applicant, BOE is required to provide both the Bureau of**

Engineering's Environmental Management Group (EMG) and the Community Investment for Families Department's Environmental Services Unit (ESU) with feedback regarding implementation of the mitigation measure(s) outlined in the above FINDINGS within 180 days of the disbursement of funds to RAP. Once verified, EMG and/or ESU will issue a Final Environmental Memo.

3. Provided there are no new FINDINGS in the future, which may indicate a significant impact to the human environment or historic resources, there shall be no further environmental review, notices or clearances to be required under the National Environmental Policy Act (NEPA) Guidelines.

4. Pursuant to Section 15269(c) of the State California Environmental Quality Act (CEQA) Guidelines, this project as proposed is categorically exempted from CEQA. A copy of the Notice of Exemption dated December 19, 2017, is attached.

5. Please note that a new environmental review may be required if the project is not implemented within five (5) years starting from the date of the issuance of this environmental clearance, in accordance with NEPA Guidelines.